UMW 15N10

100V N-Channel MOSFET

1.Description

The 15N10 uses advanced trench technology to provide excellent $R_{DS(ON)}$, low gate charge and operation with gate voltages as low as 4.5V. This device is suitable for use as a wide variety of applications.

2.1Features

- $V_{DS\ (V)}$=100V
- I_D=15A
- $R_{DS(ON)}$<95mΩ(V_{GS}=10V)
- $R_{DS(ON)}$<100mΩ(V_{GS}=4.5V)

2.2Features

- Low Total Gate Charge
- Low Reverse Transfer Capacitance
- Improved dv/dt Capability
- Fast Switching Speed

3.Pinning information

Pin	Symbol	Description
1	G	GATE
2	D	DRAIN
3	S	SOURCE

TO-252(DPAK)
top view

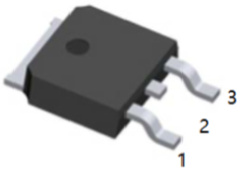

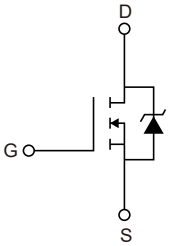

4.Absolute Maximum Ratings T_A= 25°C

Parameter		Symbol	Rating	Units
Drain-Source Voltage		V_{DS}	100	V
Gate-Source Voltage		V_{GS}	±20	
Drain Current-Continuous	T_C=25°C[Note1]	I_D	15	A
	T_C=100°C		10	
Drain Current-Pulsed[Note2]		I_{DM}	60	
Maximum Power Dissipation		P_D	55	W
Storage Temperature Range	T_C=25°C	T_{STG}	-55 to 175	°C
Operating Junction Temperature Range		T_J	-55 to 175	°C

5.Thermal resistance rating

Parameter	Symbol	Typ	Max	Units
Thermal Resistance,Junction-to-Case	R_{thJC}		2.72	°C/W

6.Specifications (T_J= 25°C, unless otherwise noted)

Parameter	Symbol	Conditions	Min	Typ	Max	Units
OFF CHARACTERISTICS						
Drain-Source Breakdown Voltage	BV_{DSS}	V_{GS}=0V, I_{DS}=250μA	100			V
Zero Gate Voltage Drain Current	I_{DSS}	V_{DS}=100V, V_{GS}=0V			1	μA
Gate-Body Leakage	I_{GSS}	V_{GS}=±20V, V_{DS}=0V			±100	nA
ON CHARACTERISTIC						
Gate Threshold Voltage	$V_{GS(th)}$	V_{DS}=V_{GS}, I_{DS}=250μA	1	1.6	2.5	V
Drain-Source On-State Resistance	$R_{DS(ON)}$	V_{GS}=10V, I_{DS}=10A		95	110	mΩ
		V_{GS}=4.5V, I_{DS}=5A		100	130	mΩ
Forward Transconductance	g_{FS}	V_{DS}=5V, I_{DS}=4A	2			S
DYNAMIC CHARACTERISTICS						
Input Capacitance	C_{iss}	V_{DS}=50V, V_{GS}=0V, f=1MHz		632		pF
Output Capacitance	C_{oss}			37		pF
Reverse Transfer Capacitance	C_{rss}			21		pF
SWITCHING CHARACTERISTICS						
Turn-On Delay Time	$t_{D(on)}$	V_{GS}=10V, V_{DS}=50V, R_L=2.8Ω R_{GEN}=6Ω, I_D=10A		12.6		ns
Rise Time	t_r			6		ns
Turn-Off Delay Time	$t_{D(off)}$			32.5		ns
Fall Time	t_f			4.3		ns
Total Gate Charge at 10V	Q_g	V_{DS}=80V, I_{DS}=10A, V_{GS}=10V		19.2		nC
Gate to Source Gate Charge	Q_{gs}			3.4		nC
Gate to Drain“Miller”Charge	Q_{gd}			6.1		nC

DRAIN-SOURCE DIODE CHARACTERISTICS AND MAXIMUM RATINGS						
Drain-Source Diode Forward Voltage	V_{SD}	V_{GS}=0V, I_{DS}=10A			1.2	V

Notes 1.The maximum current rating is package limited.

Notes 2.Repetitive Rating: Pulse width limited by maximum junction temperature.

Notes 3.E_{AS} condition: T_J=25°C,V_{DD}=50V,V_G=10V, R_G=25Ω.

7.1 Typical Characterisitics

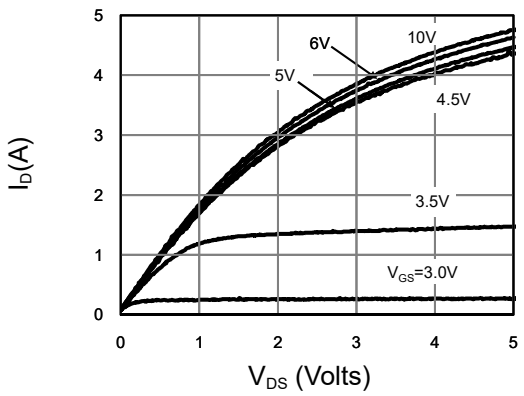

Fig 1: On-Region Characteristics (Note E)

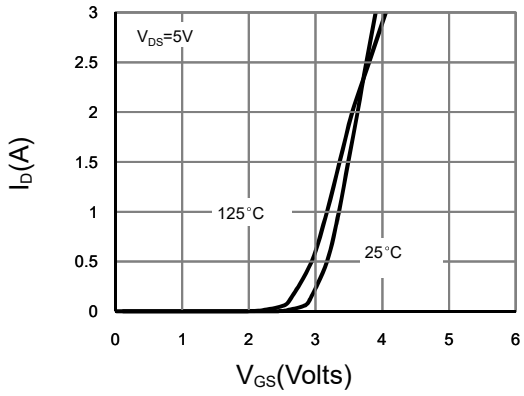

Figure 2: Transfer Characteristics (Note E)

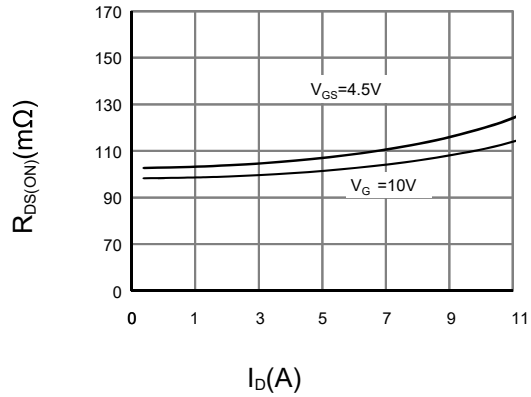

Figure 3: On-Resistance vs. Drain Current and Gate Voltage (Note E)

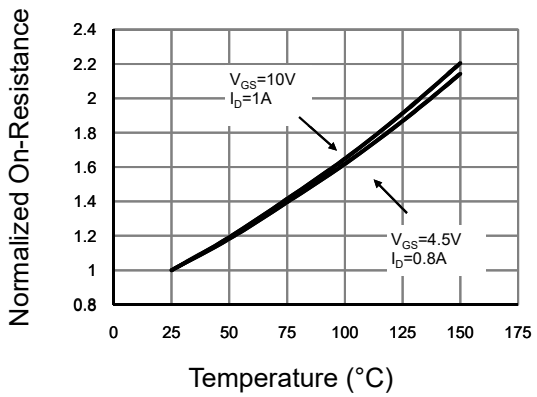

Figure 4: On-Resistance vs. Junction Temperature (Note E)

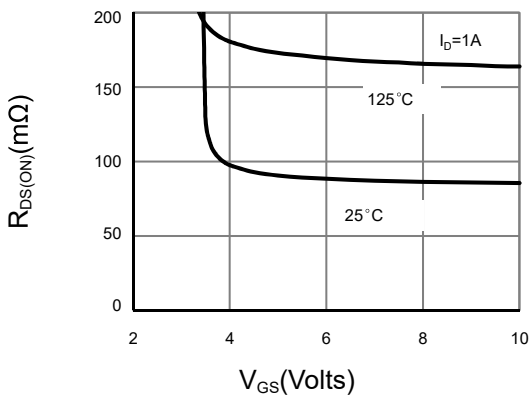

Figure 5: On-Resistance vs. Gate-Source Voltage

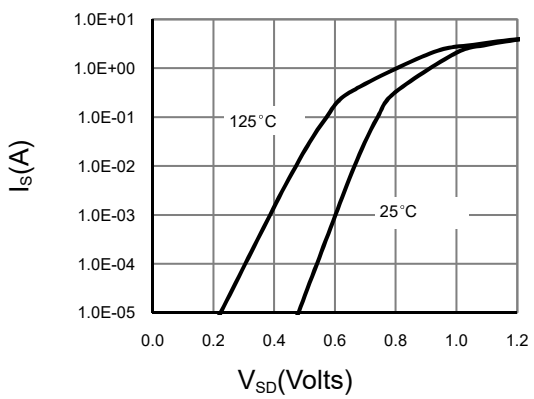

Figure 6: Body-Diode Characteristics(Note E)

7.2 Typical Characterisitics

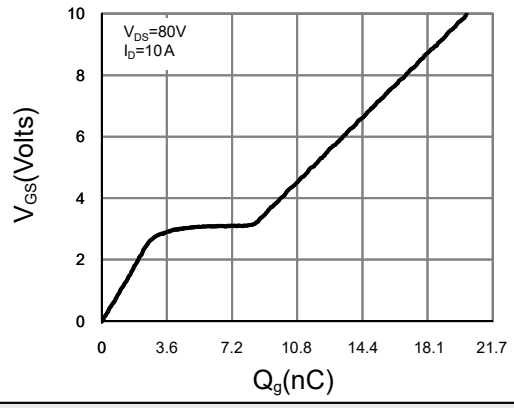

Figure 7: Gate-Charge Characteristics

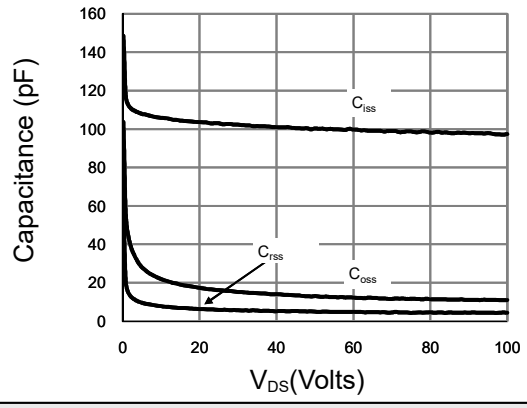

Figure 8: Capacitance Characteristics

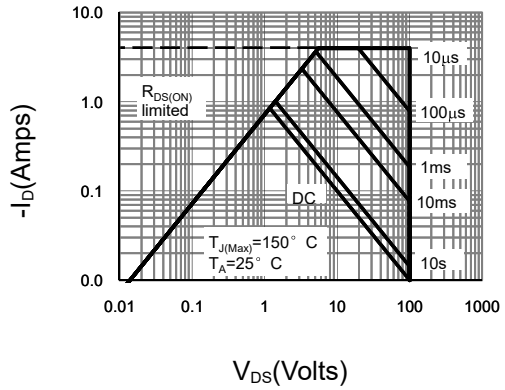

Figure 9: Maximum Forward Biased Safe Operating Area (Note F)

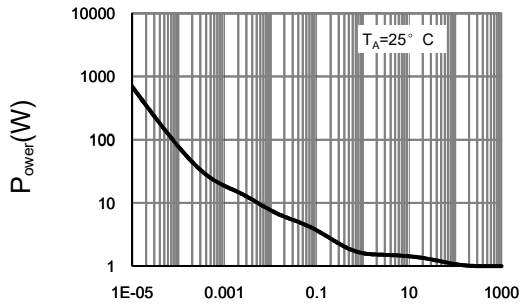

Figure 10: Single Pulse Power Rating Junction-to -Ambient (Note F)

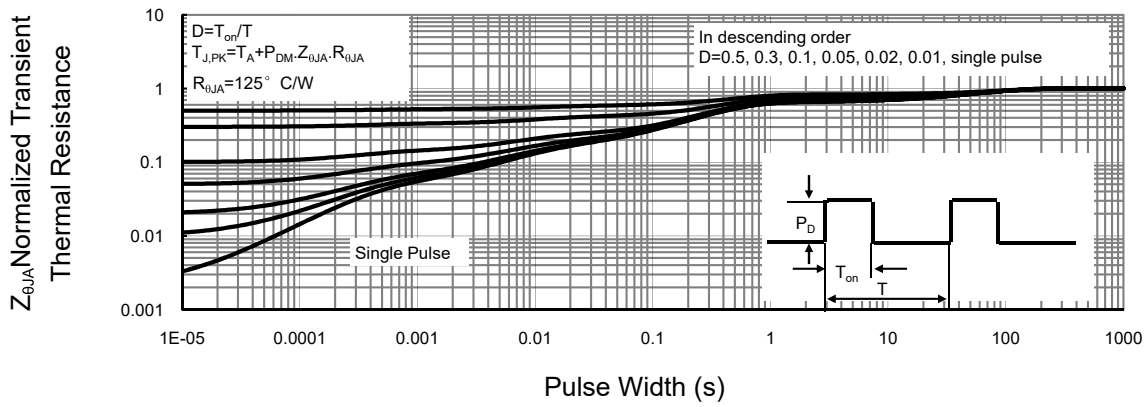

Figure 11: Normalized Maximum Transient Thermal Impedance (Note F)

8.1 Typical Characterisitics

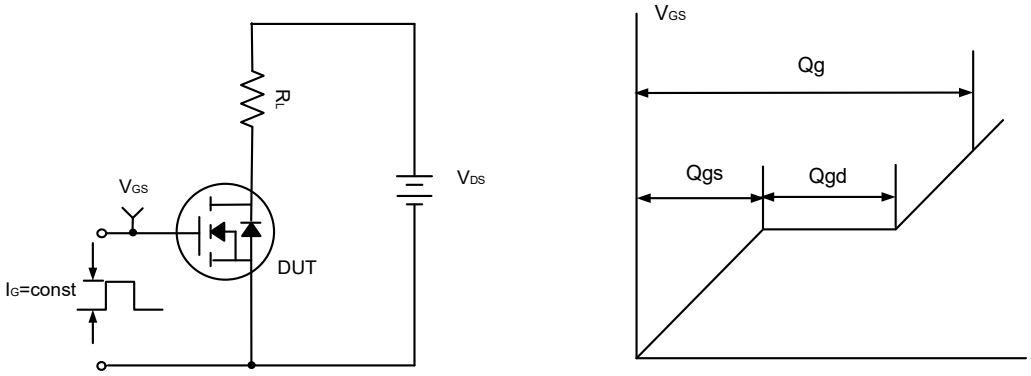

Figure1:Gate Charge Test Circuit & Waveform

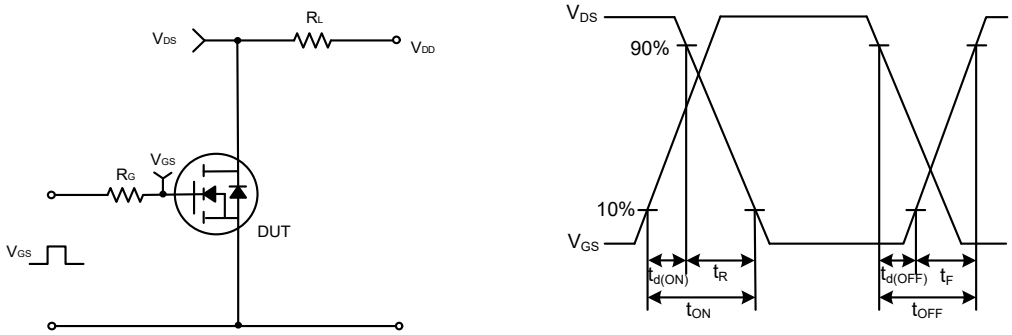

Figure 2: Resistive Switching Test Circuit & Waveforms

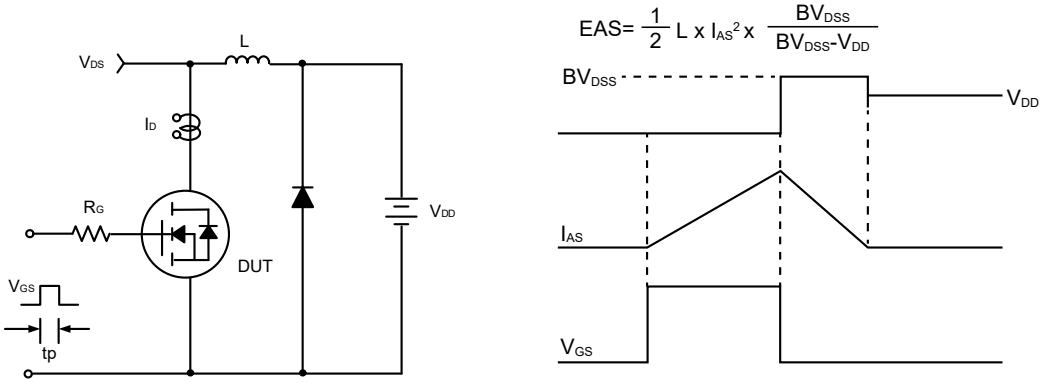

Figure 3:Unclamped inductive Switching Test Circuit & Waveforms

8.2 Typical Characterisitics

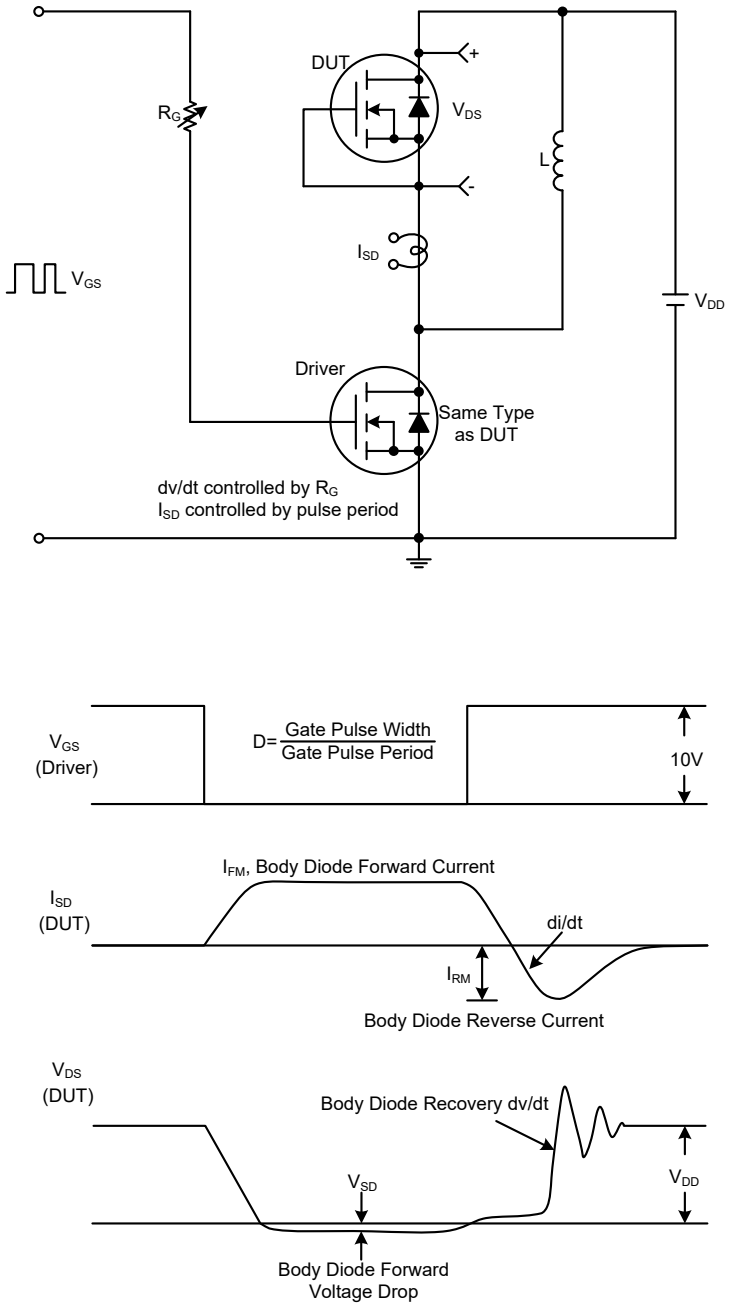

Figure 4: Peak Diode Recovery dv/dt Test Circuit and Waveforms

9.TO-252 Package Outline Dimensions

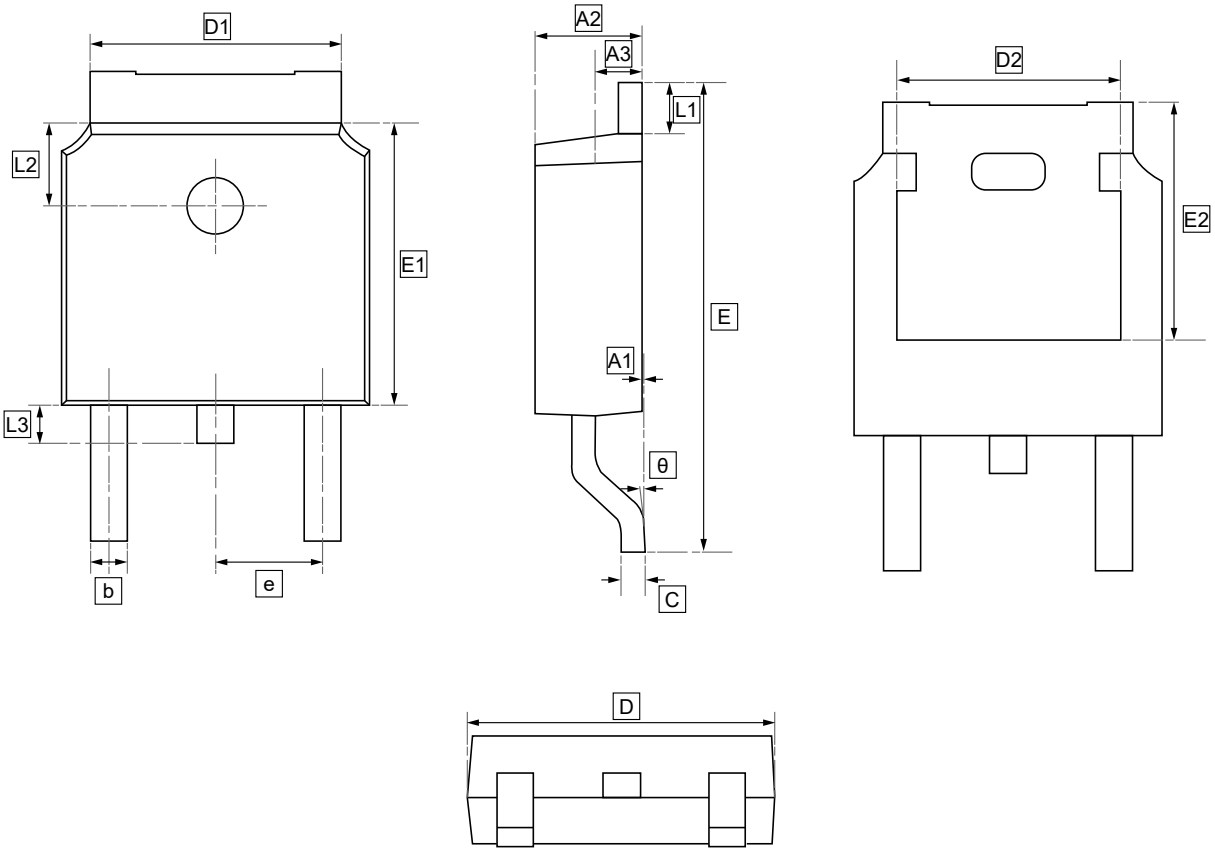

DIMENSIONS (mm are the original dimensions)

Symbol	A1	A2	A3	b	c	D	D1	D2	E	E1	E2	e	L1	L2	L3	θ
Min	0.00	2.18	0.90	0.65	0.46	6.35	4.95	4.32	9.40	5.97	5.21	2.286	0.89	1.70	0.60	0.00
Max	0.13	2.39	1.10	0.85	0.61	6.73	5.46	4.90	10.41	6.22	5.38	BSC	1.27	1.90	1.00	8.00

10.Ordering Information

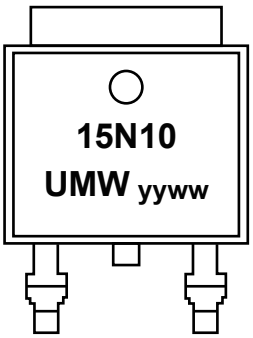

yy: Year Code
ww: Week Code

Order Code	Package	Base QTY	Delivery Mode
UMW 15N10	TO-252	2500	Tape and reel

11.Disclaimer

UMW reserves the right to make changes to all products, specifications. Customers should obtain the latest version of product documentation and verify the completeness and currency of the information before placing an order.

When applying our products, please do not exceed the maximum rated values, as this may affect the reliability of the entire system. Under certain conditions, any semiconductor product may experience faults or failures. Buyers are responsible for adhering to safety standards and implementing safety measures during system design, prototyping, and manufacturing when using our products to prevent potential failure risks that could lead to personal injury or property damage.

Unless explicitly stated in writing, UMW products are not intended for use in medical, life-saving, or life-sustaining applications, nor for any other applications where product failure could result in personal injury or death. If customers use or sell the product for such applications without explicit authorization, they assume all associated risks.

When reselling, applying, or exporting, please comply with export control laws and regulations of China, the United States, the United Kingdom, the European Union, and other relevant countries, regions, and international organizations.

This document and any actions by UMW do not grant any intellectual property rights, whether express or implied, by estoppel or otherwise. The product names and marks mentioned herein may be trademarks of their respective owners.