UMW 30N06

60V N-Channel MOSFET

1.Description

These N-channel enhancement mode power mosfets used advanced trench technology design, provided excellent Rdson and low gate charge. Which accords with the RoHS standard.

2.1Features

- $V_{DS\ (V)}$=60V
- I_D=35A(V_{GS}=10V)
- $R_{DS(ON)}$<23mΩ(V_{GS}=10V)
- $R_{DS(ON)}$<30mΩ(V_{GS}=4.5V)

2.2Features

- Fast Switching
- Low ON Resistance(Rdson≤29mΩ)
  Low Gate Charge
- Low Reverse transfer capacitances
- 100% Single Pulse avalanche energy Test

3.Pinning information

Pin	Symbol	Description
1	G	GATE
3	S	SOURCE
2	D	DRAIN

TO-252(DPAK)
top view

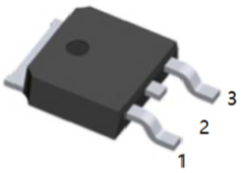

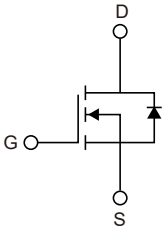

4.Absolute Maximum Ratings T_A= 25°C

Parameter		Symbol	Rating	Units
Drain-Source Voltage		V_{DS}	60	V
Gate-Source Voltage		V_{GS}	±20	
Continuous Drain Current	T_C=25°C	I_D	35	A
	T_C=100°C		24.5	
Pulsed Drain Current [1]		I_{DM}	100	
Single Puise Avalanche Energy [2]		E_{AS}	56.2	mJ
Maximum Power Dissipation	T_C=25°C	P_D	36.2	W
Storage Temperature Range		T_{STG}	-55 to 150	°C
Operating Junction Temperature Range		T_J	-55 to 150	°C

5.Thermal resist ance rating

Parameter	Symbol	Typ	Max	Units
Thermal Resistance,Junction-to-Case	$R_{\theta JC}$		3.45	°C/W
Thermal Resistance,Junction to Ambient	$R_{\theta JA}$		111.5	°C/W

6.SPECIFICATIONS (T_J= 25°C, unless otherwise noted)

Parameter	Symbol	Conditions	Min	Typ	Max	Units
OFF CHARACTERISTICS						
Drain-Source Breakdown Voltage	BV_{DSS}	V_{GS}=0V, I_{DS}=250μA	60			V
Zero Gate Voltage Drain Current	I_{DSS}	V_{DS}=60V, V_{GS}=0V			1	μA
Gate-Body Leakage	I_{GSS}	V_{GS}=±20V, V_{DS}=0V			±100	nA
ON CHARACTERISTIC						
Gate Threshold Voltage	$V_{GS(th)}$	V_{DS}=V_{GS}, I_{DS}=250μA	1	1.5	2	V
Drain-Source On-State Resistance	$R_{DS(ON)}$	V_{GS}=10V, I_{DS}=19A		23	29	mΩ
		V_{GS}=4.5V, I_{DS}=19A		30	38	mΩ
DYNAMIC CHARACTERISTICS						
Input Capacitance	C_{iss}	V_{DS}=30V, V_{GS}=0V, f=1MHz		939		pF
Output Capacitance	C_{oss}			73.5		pF
Reverse Transfer Capacitance	C_{rss}			52.7		pF
Gate Resisitance	R_g	V_{DD}=0V, V_{GS}=0V, f=1MHz		1.9		Ω
SWITCHING CHARACTERISTICS						
Turn-On Delay Time	$t_{D(on)}$	V_{GS}=10V, V_{DS}=30V R_{GEN}=3Ω, I_D=20A		8.4		ns
Rise Time	t_r			8.5		ns
Turn-Off Delay Time	$t_{D(off)}$			35.4		ns
Fall Time	t_f			4.8		ns
Total Gate Charge at 10V	Q_g	V_{DS}=30V, I_{DS}=20A, V_{GS}=10V		21.2		nC
Gate to Source Gate Charge	Q_{gs}			3.6		nC
Gate to Drain“Miller”Charge	Q_{gd}			5.5		nC

DRAIN-SOURCE DIODE CHARACTERISTICS AND MAXIMUM RATINGS						
Drain-Source Diode Forward Voltage	V_{SD}	V_{GS}=0V, I_{DS}=20A			1.2	V
Reverse Recovery Time	t_{rr}	T_J=25°C, I_F=20A		18.8		nS
Reverse Recovery Charge	Q_{rr}	dI/dt=100A/μs		13.4		uC

Notes:

1) Repetitive rating; pulse width limited by maximum junction temperature .

2) L=0.5mH,V_{DD}=30V,I_{as}=15A Start T_J=25°C.

3) Recommend soldering temperature defined by IPC/JEDEC J-STD 020.

7.1Typical Characterisitics

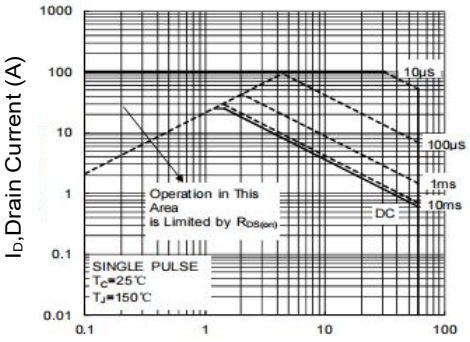

Figure 1: Maximum Safe Operating Area

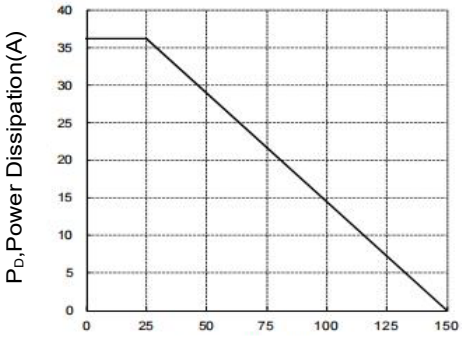

Figure 2: Maximum Power Dissipation vs Case Temperature

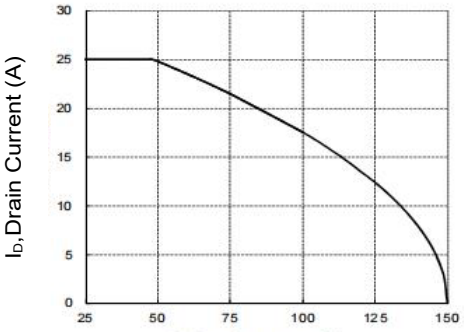

Figure 3: Maximum Power Dissipation vs Case Temperature

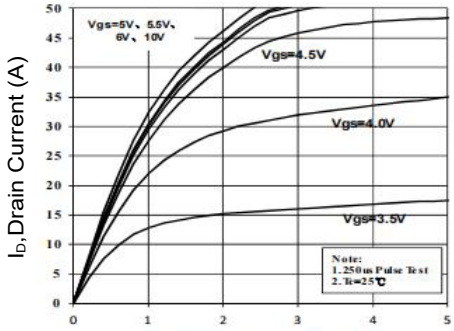

Figure 4: Typical output Characteristics

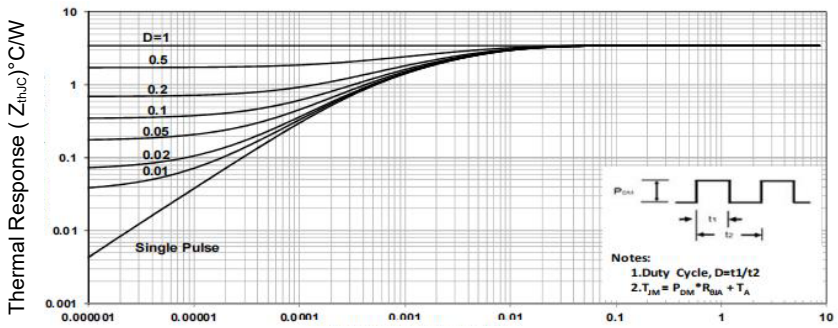

Figure 5: Maximum Effective Transient Thermal Impedance, Junction-to-Case

7.2Typical Characterisitics

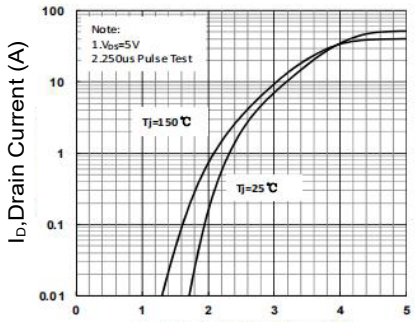

V_{GS},Gate-to-Source Voltage (V)

Figure 6: TypicalTransfer Characteristics

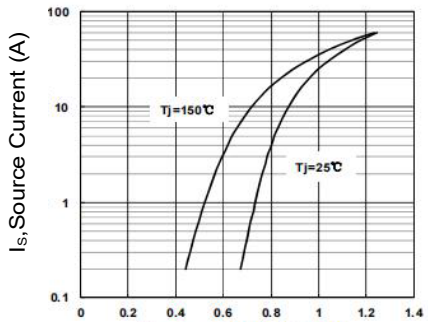

V_{SD},Source-to-Drain Voltage (V)

Figure 7: Typical Body Diode TransferCharacteristics

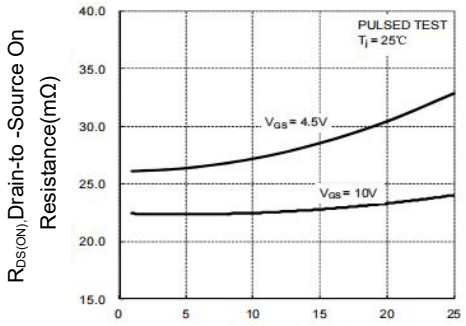

I_D,Drain Current (A)

Figure 8: Drain-to-Source On Resistance vs Drain Curent

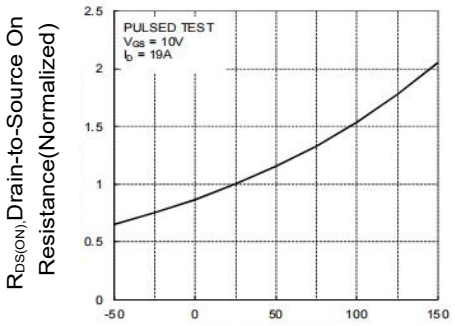

T_J,Junction Temperature(°C)

Figure 9: Normalized On Resistance Junction Temperature

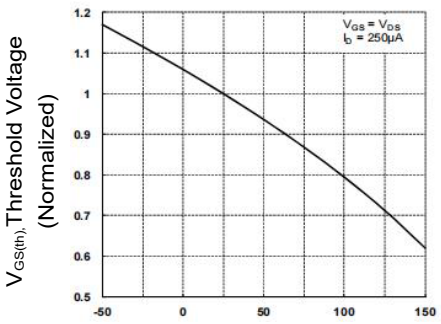

T_J, Junction Temperature (°C)

Figure 10: Normaliz ed Threshold Voitage vs Junction Temperature

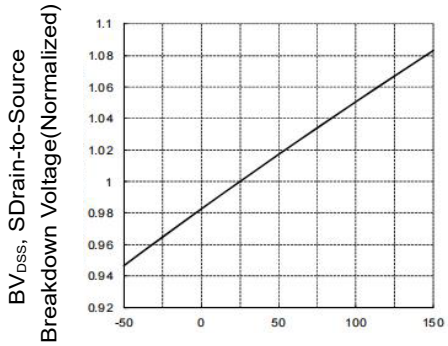

T_J, Junction Temperature (°C)

Figure 11: Normaliz ed Threshold Voitage vs Junction Temperature

7.3Typical Characterisitics

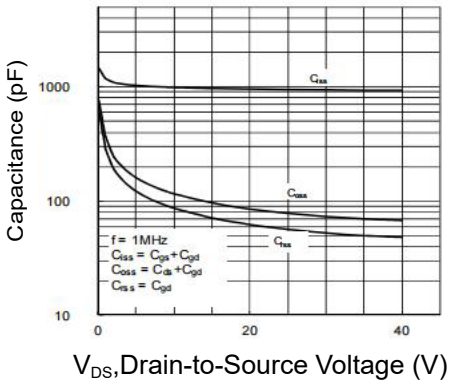

Figure 12: Capacitance Characteristics

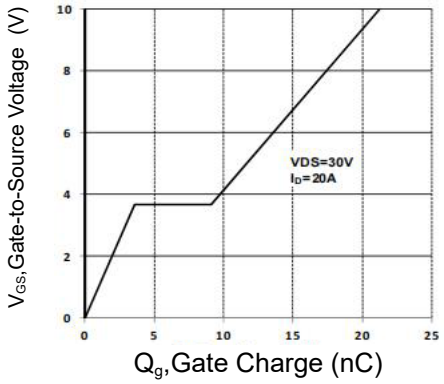

Figure 13: Typical Gate Chargevs Gate toSource Voltage

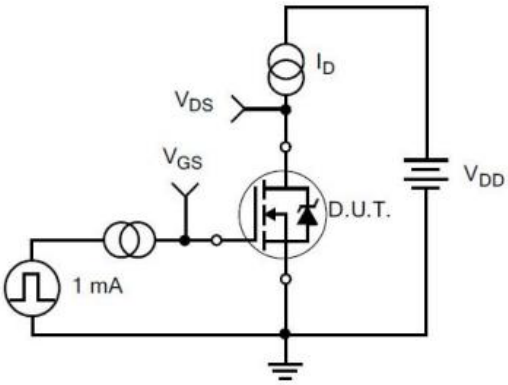

Figure 14: Gate Charge Test Circuit

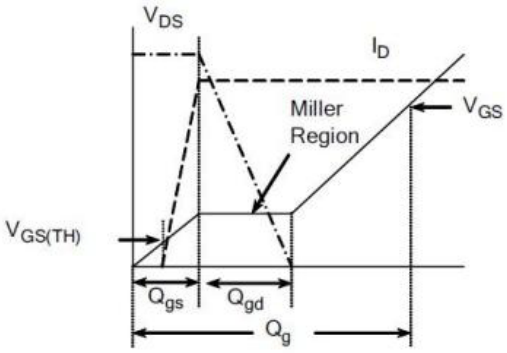

Figure 15: Gate Charge Waveforms

7.3Typical Characterisitics

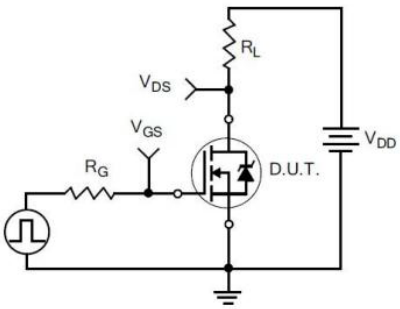

Figure 16: Resistive Switching Test Cireuit

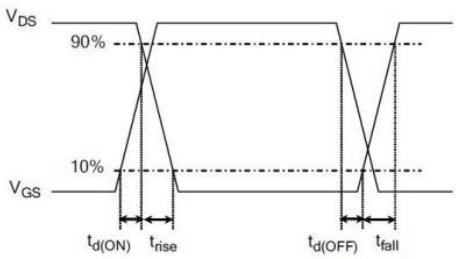

Figure 17: Resistive Switching Waveforms

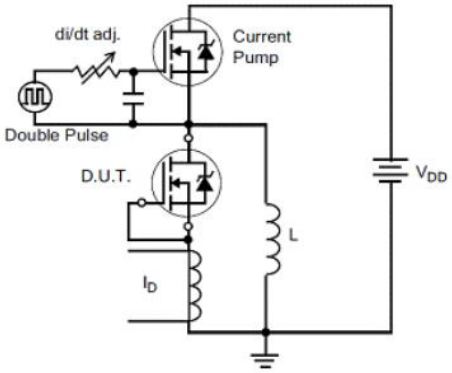

Figure 18: Diode Reverse Recovery Test Circuit

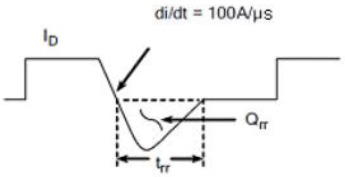

Figure 19: Diode Reverse Recovery Waveform

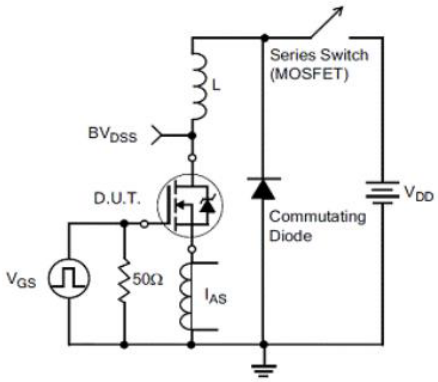

Figure 20: Uncla mped Induc tive Switehing Test Circuit

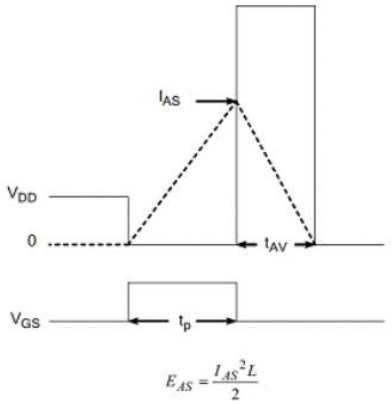

Figure : Unclamped Inductive Switching Waveform

8.TO-252 PACKAGE OUTLINE DIMENSIONS

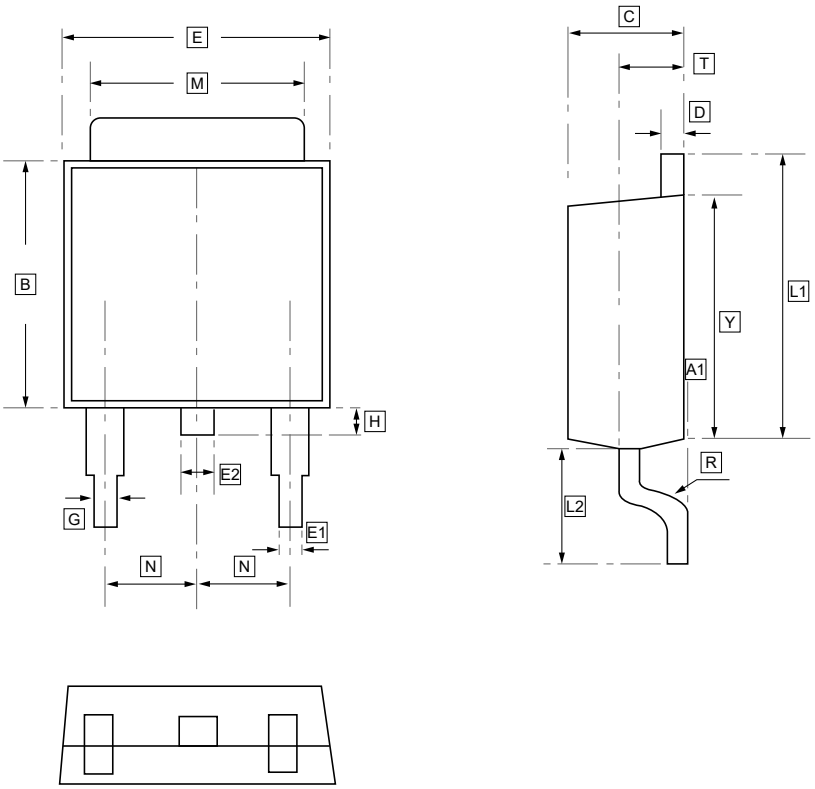

DIMENSIONS (mm are the original dimensions)

Symbol	A	A1	B	C	D	E1	E2	F	G	L1	L2	H	M	N	R	T	Y
Min	6.30	0	5.70	2.10	0.30	0.60	0.70	0.30	0.70	9.60	2.70	0.40	5.10	2.09	0.3	1.40	5.10
Max	6.90	0.16	6.30	2.50	0.70	0.90	1.00	0.60	1.20	10.50	3.10	1.00	5.50	2.49	0.3	1.60	6.30

9.Ordering information

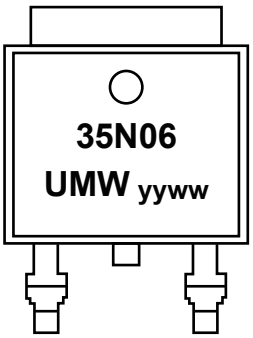

yy: Year Code
ww: Week Code

Order Code	Package	Base QTY	Delivery Mode
UMW 35N06	TO-252	2500	Tape and reel

10.Disclaimer

UMW reserves the right to make changes to all products, specifications. Customers should obtain the latest version of product documentation and verify the completeness and currency of the information before placing an order.

When applying our products, please do not exceed the maximum rated values, as this may affect the reliability of the entire system. Under certain conditions, any semiconductor product may experience faults or failures. Buyers are responsible for adhering to safety standards and implementing safety measures during system design, prototyping, and manufacturing when using our products to prevent potential failure risks that could lead to personal injury or property damage.

Unless explicitly stated in writing, UMW products are not intended for use in medical, life-saving, or life-sustaining applications, nor for any other applications where product failure could result in personal injury or death. If customers use or sell the product for such applications without explicit authorization, they assume all associated risks.

When reselling, applying, or exporting, please comply with export control laws and regulations of China, the United States, the United Kingdom, the European Union, and other relevant countries, regions, and international organizations.

This document and any actions by UMW do not grant any intellectual property rights, whether express or implied, by estoppel or otherwise. The product names and marks mentioned herein may be trademarks of their respective owners.