1.Description

The AD8631A (single), AD8632A (dual) and AD8634A (quad) are low noise,low voltage, and micro power operational amplifiers. With an excellent bandwidth of 6.5MHz, a slew rate of 4V/μs, and a quiescent current of 480μA per amplifier at 5V, the AD863xA family can be designed into a wide range of applications. The AD863xA op-amps are designed to provide optimal performance in low voltage and low noise systems. The input common-mode voltage range includes ground, and the maximum input offset voltage are 4.2mV. These parts provide railto-rail output swing into heavy loads. The AD863xA family is specified for single or dual power supplies of +2.3V to +5.5V. All models are specified over the extended industrial temperature range of −40°C to +125°C.

2.Features

- High Slew Rate: 4V/μs
- Wide Bandwidth: 6.5MHz
- Low Power: 480μA per Amplifier Supply Current
- Settling Time to 0.1% with 2V Step: 1 μs
- Low Noise: 20 nV/√Hz@10KHz
- High Gains of 103 dB for Active Filters and Gain Stages
- Low Offset Voltage: 4.2 mV Maximum
- Unit Gain Stable
- Rail-to-Rail Input and Output
  Input Voltage Range: -0.1V to +5.1V at 5V Supply
- Operating Power Supply: +2.3V to +5.5V
- Operating Temperature Range: -40°C to +125°C

3.Applications

- Photodiode Amplification
- Sensor Interfaces
- Audio Outputs
- Active Filters
- Driving A/D Converters
- Portable Equipment & Battery-Powered Instrumentation

4.Pinning Information

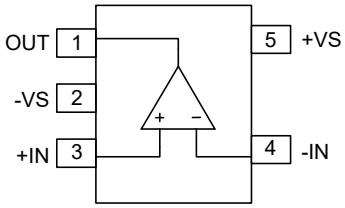

AD8631
SOT23-5

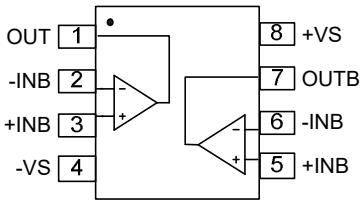

AD8632A
MSOP-8/SOP-8/TSSOP-8

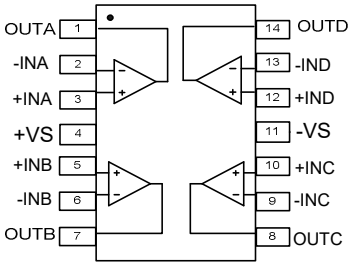

AD8634
SOP-14

5.Pin Description

Pin	Symbol	Description
1	-IN	Inverting Input of the Amplifier. The Voltage range can go from (V_{S-} – 0.1V) to (V_{S+} + 0.1V)
2	+IN	Non-Inverting Input of Amplifier. This pin has the same voltage range as –IN.
3	$+V_S$	Positive Power Supply. The voltage is from 2.3V to 5.5V. Split supplies are possible as long as the voltage between VS+ and VS– is between 2.3V and 5.5V. A bypass capacitor of 0.1μF as close to the part as possible should be used between power supply pins or between supply pins and ground
4	$-V_S$	Negative Power Supply. It is normally tied to ground. It can also be tied to a voltage other than ground as long as the voltage between V_{S+} and V_{S-} is from 2.3V to 5.5V. If it is not connected to ground, bypass it with a capacitor of 0.1μF as close to the part as possible.
5	OUT	Amplifier Output
6	N/C	No Connection

6.Absolute Maximum Ratings(T_A= 25°C)

Description	Symbol	Value	Units
Supply Voltage, V_{S+} to V_{S-}	V_{S+},V_{S-}	7	V
Common-Mode Input Voltage	V_{CM}	V_{S-} – 0.3 to V_{S+} + 0.3	V
Electrostatic Discharge Voltage	ESD	HBM ±4000	V
		CDM ±1000	V
Junction Temperature	T_J	160	°C
Storage Temperature Range	T_{STG}	-65 to 150	°C(T_J)
Lead Temperature Range (Soldering 10 sec)	T_{JL}	260	°C

Notes:

1. Stresses beyond those listed under Absolute Maximum Ratings may cause permanent damage to the device. These are stress ratings only, which do not imply functional operation of the device at these or any other conditions beyond those indicated under Recommended Operating Conditions. Exposure to absolute-maximum-rated conditions for extended periods may affect device reliability.

2. Provided device does not exceed maximum junction temperature (T_J) at any time.

7.Electrical Characteristics

V_S=5V, T_A=25°C, V_{CM}=V_S/2, V_O=V_S/2, and R_L=10kΩ connected to V_S/2, unless otherwise noted.

Parameter	Symbol	Conditions	Min	Typ	Max	Units
INPUT CHARACTERISTICS						
Input offset voltage	V_{OS}			±0.8	4.2	mV
Over temperature					4.5	
Offset voltage drift	$V_{OS}TC$			2		μV/°C
Input bias current	I_B			200		nA
Over temperature				800		
Input ofset current	I_{OS}			1		PA
Common-mode voltage range	V_{CM}		0		V_{S+}+0.1	V
Common-mode rejection ratio	CMRR	V_{CM}=0.05V to 5V		84		dB
Over temperature				80		
		V_{CM}=V_{S-}–0.1 to V_{S+}+0.1V		76		
Open-loop voltage gain	A_{VOL}	R_L=10kΩ, V_O=0.05 to 5V		100		V/mV
Over temperature				90		
		R_L=600Ω, V_O=0.15 to 5V		86		
Over temperature				80		
Input resistance	R_{IN}			100		GΩ
Input capacitance	C_{IN}	Differential		2	20	pF
		Common mode		3.5		
OUTPUT CHARACTERISTICS						
High output voltage swing	V_{OH}	R_L=600Ω		4.875		V
		R_L=10kΩ		4.7		
Low output voltage swing	V_{OL}	R_L=600Ω		120		mV
		R_L=10kΩ		7		
Closed-loop output impedance	Z_{OUT}	f=200kHz, G=+1		0.4		Ω
Open-loop output impedance		f=1MHz, I_O=0		2.6		
Short-circuit current	I_{SC}	Source current through 10Ω		40		mA
		Sink current through 10Ω		30		

Parameter	Symbol	Conditions	Min	Typ	Max	Units
DYNAMIC PERFORMANCE						
Gain bandwidth product	GBW	f=1kHz		6.5		MHz
Phase margin	ΦM	C_L=100pF		60		°
Slew rate	SR	G=1, C_L=100pF V_O=1.5V to 3.5V		4		V/μs
Full power bandwidth	BW_P	<1% distortion		300		KHz
Settling time	t_S	T_O 0.1%, G=+1, 2V step		1		μs
		T_O 0.01%, G=+1, 2V step		1.2		
Overload recovery time	t_{OR}	V_{IN} * Gain > V_S		0.5		μs
NOISE PERFORMANCE						
Input voltage noise	V_n	f=0.1 to 10 Hz		12		μV_{P-P}
Input voltage noise density	e_n	f=10kHz		20		nV/√Hz
Input current noise density	I_n	f=10kHz		5		fA/√Hz
POWER SUPPLY						
Operating supply voltage	V_s		2.3		5.5	V
Power supply rejection ratio	PSRR	V_S=2.7V to 5.5V V_{CM}<V_{S+}− 2V		84		dB
Over temperature				80		
Quiescent current (per amplifier)	I_Q			480		μA
Over temperature				520		
THERMAL CHARACTERISTICS						
Operating temperature range	T_A		-40		125	°C
Package thermal resistance	θ_{JA}	SOT23-5		190		°C/W
		MSOP-8		216		
		SOP-8		125		
		TSSOP-8	6	153		

Notes:

specifications subject to changes without notice

8.Typical Characteristic

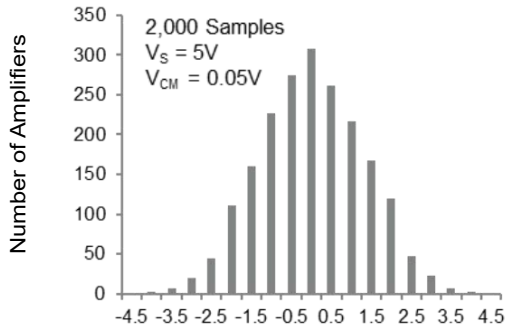

Figure 1: Input Offset Voltage Production Distribution

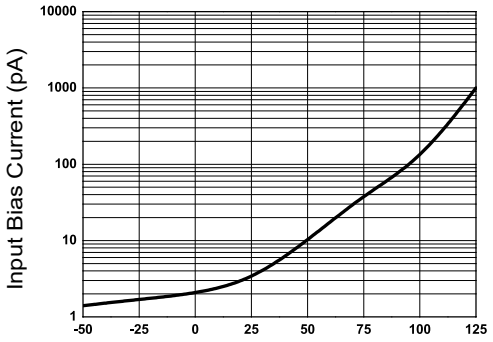

Figure 2: Input Bias Current as a function of Temperature

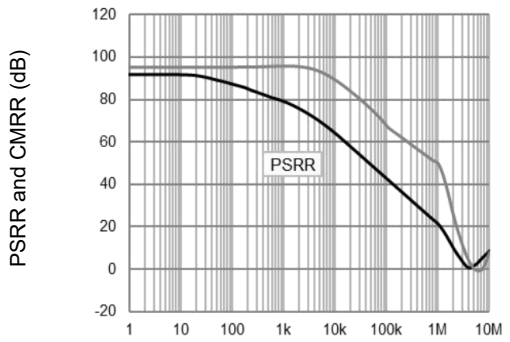

Figure 3: Power Supply and Common-mode Rejection Ratioas a function of Frequency

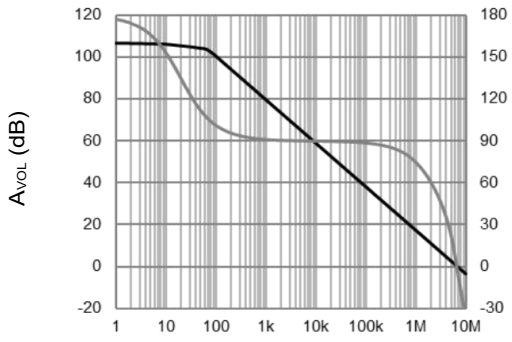

Figure 4: Open-loop Gain and Phase as a function of Frequency

9.Application Notes

Low Input Bias Current

The AD863xA family is a CMOS op-amp family and features very low input bias current in pA range. The low input bias current allows the amplifiers to be used in applications with high resistance sources. Care must be taken to minimize PCB Surface Leakage. See below section on “PCB Surface Leakage” for more details.

PCB Surface Leakage

In applications where low input bias current is critical, Printed Circuit Board (PCB) surface leakage effects need to be considered. Surface leakage is caused by humidity, dust or other contamination on the board. Under low humidity conditions, a typical resistance between nearby traces is 1012Ω. A 5V difference would cause 5pA of current to flow, which is greater than the AD863xA’s input bias current at +25°C (±1fA, typical). It is recommended to use multi-layer PCB layout and route the opamp’s –IN and +IN signal under the PCB surface. The effective way to reduce surface leakage is to use a guard ring around sensitive pins (or traces). The guard ring is biased at the same voltage as the sensitive pin. An example of this type of layout is shown in Figure 1 for Inverting Gain application.

1. For Non-Inverting Gain and Unity-Gain Buffer:

a) Connect the non-inverting pin (+IN) to the input with a wire that does not touch the PCB surface.

b) Connect the guard ring to the inverting input pin (–IN). This biases the guard ring to the Common Mode input voltage.

2. For Inverting Gain and Trans-impedance Gain Amplifiers (convert current to voltage, such as photo detectors):

a) Connect the guard ring to the non-inverting input pin (+IN). This biases the guard ring to the same reference voltage as the op-amp (e.g., V_S/2 or ground).

b) Connect the inverting pin (–IN) to the input with a wire that does not touch the PCB surface

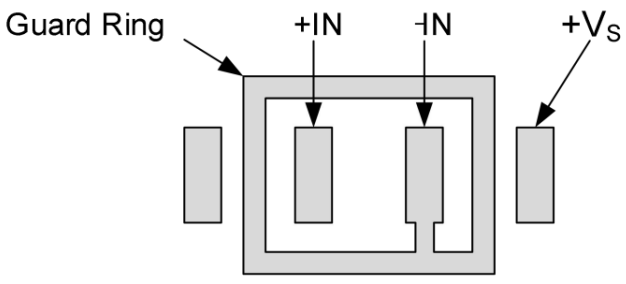

Figure 1. Use a guard ring around sensitive pins

Ground Sensing And Rail To Rail

The input common-mode voltage range of the AD863xA series extends 300mV beyond the supply rails. This is achieved with a complementary input stage—a N-channel input differential pair in parallel with a P-channel differential pair. For normal operation, inputs should be limited to this range. The absolute maximum input voltage is 500mV beyond the supplies. Inputs greater than the input common-mode range but less than the maximum input voltage, while not valid, will not cause any damage to the op-amp. Unlike some other op-amps, if input current is limited, the inputs may go beyond the supplies without phase inversion, as shown in Figure 2. Since the input common-mode range extends from (V_{S-} − 0.1V) to (V_{S+} + 0.1V), the AD863x op-amps can easily perform 'true ground' sensing.

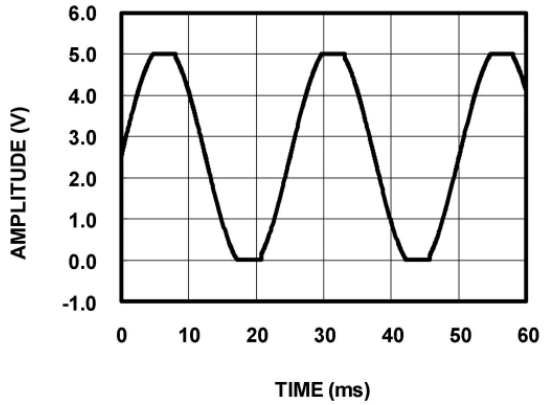

Figure 2. No Phase Inversion with Inputs Greater Than the Power-Supply Voltage

A topology of class AB output stage with common-source transistors is used to achieve rail-to-rail output. For light resistive loads (e.g. 100kΩ), the output voltage can typically swing to within 5mV from the supply rails. With moderate resistive loads (e.g. 10kΩ), the output can typically swing to within 10mV from the supply rails and maintain high open-loop gain. See the Typical Characteristic curve, Output Voltage Swing as a function of Output Current, for more information.

The maximum output current is a function of total supply voltage. As the supply voltage to the amplifier increases, the output current capability also increases. Attention must be paid to keep the junction temperature of the IC below 150°C when the output is in continuous short-circuit. The output of the amplifier has reverse-biased ESD diodes connected to each supply. The output should not be forced more than 0.5V beyond either supply, otherwise current will flow through these diodes.

Capacitive Load And Stability

The AD863xA can directly drive 1nF in unity-gain without oscillation. The unity-gain follower (buffer) is the most sensitive configuration to capacitive loading.

Direct capacitive loading reduces the phase margin of amplifiers and this results in ringing or even oscillation. Applications that require greater capacitive drive capability should use an isolation resistor between the output and the capacitive load like the circuit in Figure 3. The isolation resistor R_{ISO} and the load capacitor C_L form a zero to increase stability. The bigger the R_{ISO} resistor value, the more stable V_{OUT} will be. Note that this method results in a loss of gain accuracy because R_{ISO} forms a voltage divider with the R_L.

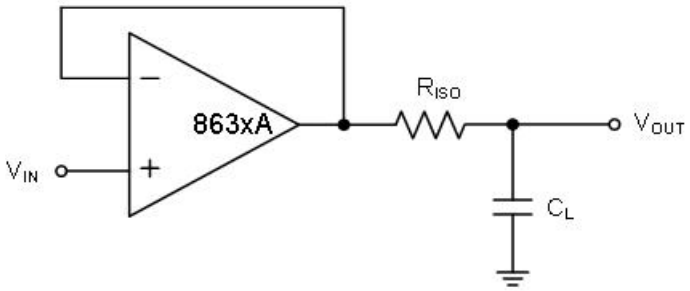

Figure 3. Indirectly Driving Heavy Capacitive Load

An improvement circuit is shown in Figure 4. It provides DC accuracy as well as AC stability. The RF provides the DC accuracy by connecting the inverting signal with the output. The CF and RISO serve to counteract the loss of phase margin by feeding the high frequency component of the output signal back to the amplifier's inverting input, thereby preserving phase margin in the overall feedback loop.

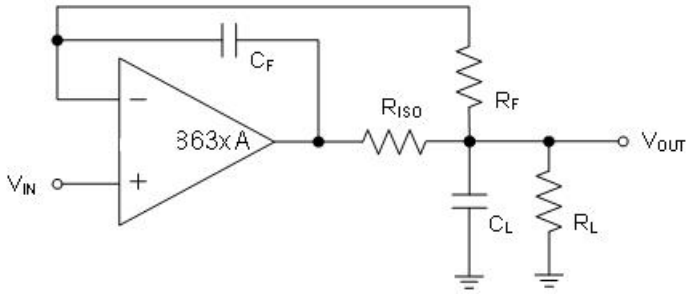

Figure 4. Indirectly Driving Heavy Capacitive Load with DC Accuracy

For no-buffer configuration, there are two other ways to increase the phase margin: (a) by increasing the amplifier's gain, or (b) by placing a capacitor in parallel with the feedback resistor to counteract the parasitic capacitance associated with inverting node.

Power Supply La 4out And By ass

The AD863xA family operates from either a single +2.3V to +5.5V supply or dual ±1.15V to ±2.25V supplies. For single-supply operation, bypass the power supply

V_S with a ceramic capacitor (i.e. 0.01μF to 0.1μF) which should be placed close (within 2mm for good high frequency performance) to the VS pin. For dual-supply operation, both the VS+ and the VS– supplies should be bypassed to ground with separate 0.1μF ceramic capacitors. A bulk capacitor (i.e. 2.2μF or larger tantalum capacitor) within 100mm to provide large, slow currents and better performance. This bulk capacitor can be shared with other analog parts.Good PC board layout techniques optimize performance by decreasing the amount of stray capacitance at the op-amp's inputs and output. To decrease stray capacitance, minimize trace lengths and widths by placing external components as close to the device as possible. Use surface-mount components whenever possible. For the op-amp, soldering the part to the board directly is strongly recommended. Try to keep the high frequency big current loop area small to minimize the EMI (electromagnetic interfacing).

Grounding

A ground plane layer is important for the AD863xA circuit design. The length of the current path speed currents in an inductive ground return will create an unwanted voltage noise. Broad ground plane areas will reduce the parasitic inductance.

Input To Output Coupling

To minimize capacitive coupling, the input and output signal traces should not be parallel. This helps reduce unwanted positive feedback.

10.Typical Application Circuits

Differential Amplifier

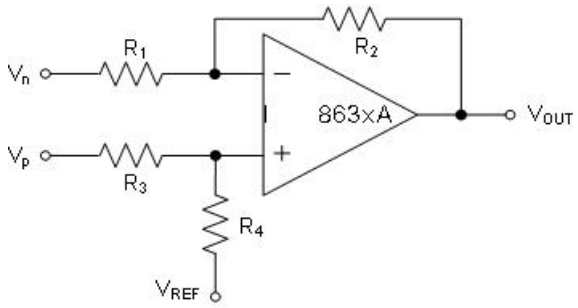

Figure 5. Differential Amplifier

The circuit shown in Figure 5 performs the difference function. If the resistors ratios are equal $R_4/R_3 = R_2/R_1$, then:

$$V_{OUT}=(V_p - V_n) \times R_2/R_1 + V_{REF}$$

Instrumentation Amplifier

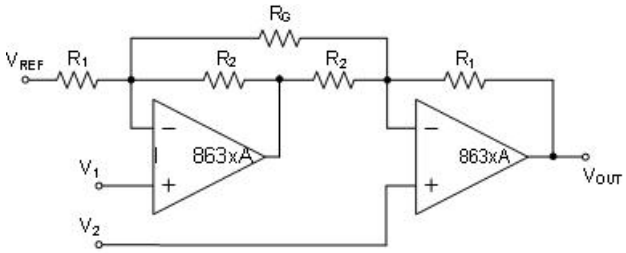

$$V_{OUT}=(V_1-V_2)(1+\frac{R_1}{R_2}+\frac{2R_1}{R_G})+V_{REF}$$

Figure 6. Instrumentation Amplifier

Buffered Chemical Sensors

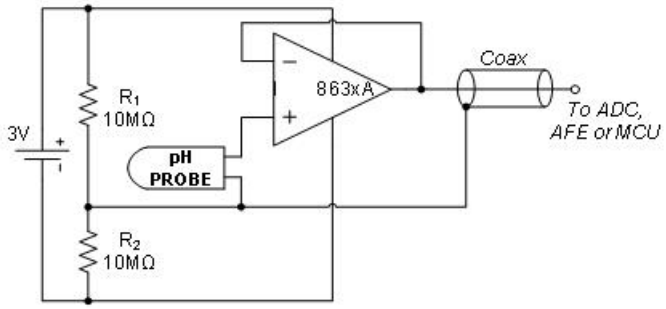

All components contained within the pH probe

The AD863xA family has input bias current in the pA range. This is ideal in buffering high impedance chemical sensors, such as pH probes. As an example, the circuit in Figure 7 eliminates expansive low-leakage cables that is required to connect a pH probe (general purpose combination pH probes, e.g Corning 476540) to metering ICs such as ADC, AFE and/or MCU. An AD863xA op-amp and a lithium battery are housed in the probe assembly. A conventional low-cost coaxial cable can be used to carry the op-amp's output signal to subsequent ICs for pH reading.

Shunt-Based Current Sensing Amplifier

The current sensing amplification shown in Figure 8 has a slew rate of 2πfVPP for the output of sine wave signal, and has a slew rate of 2fVPP for the output of triangular wave signal. In most of motor control systems, the PWM frequency is at 10kHz to 20kHz, and one cycle time is 100μs for a 10kHz of PWM frequency. In current shunt monitoring for a motor phase, the phase current is converted to a phase voltage signal for ADC sampling. This sampling voltage signal must be settled before entering the ADC. As the Figure 8 shown, the total settling time of a current shunt monitor circuit includes: the rising edge delay time (tSR) due to the op-amp's slew rate, and the measurement settling time (tSET). If the minimum duty cycle of the PWM is defined at 5%, and the tSR is required at 20% of a total time window for a phase current monitoring, in case of a 3.3V motor control system (3.3V MCU with 12-bit ADC), the op-amp's slew rate should be more than:

3.3V / (100μs× 5% × 20%) = 3.3 V/μs

At the same time, the op-amp's bandwidth should be much greater than the PWM frequency, like 10 time at least.

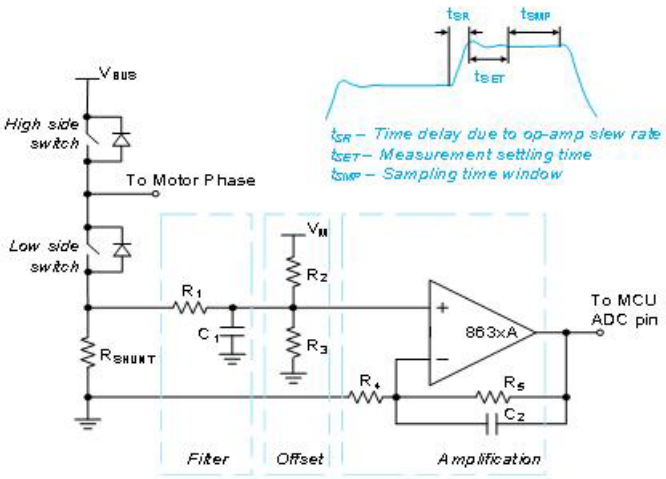

Figure 8. Current Shunt Monitor Circuit

11.1 SOT23-5 Package Outline Dimensions

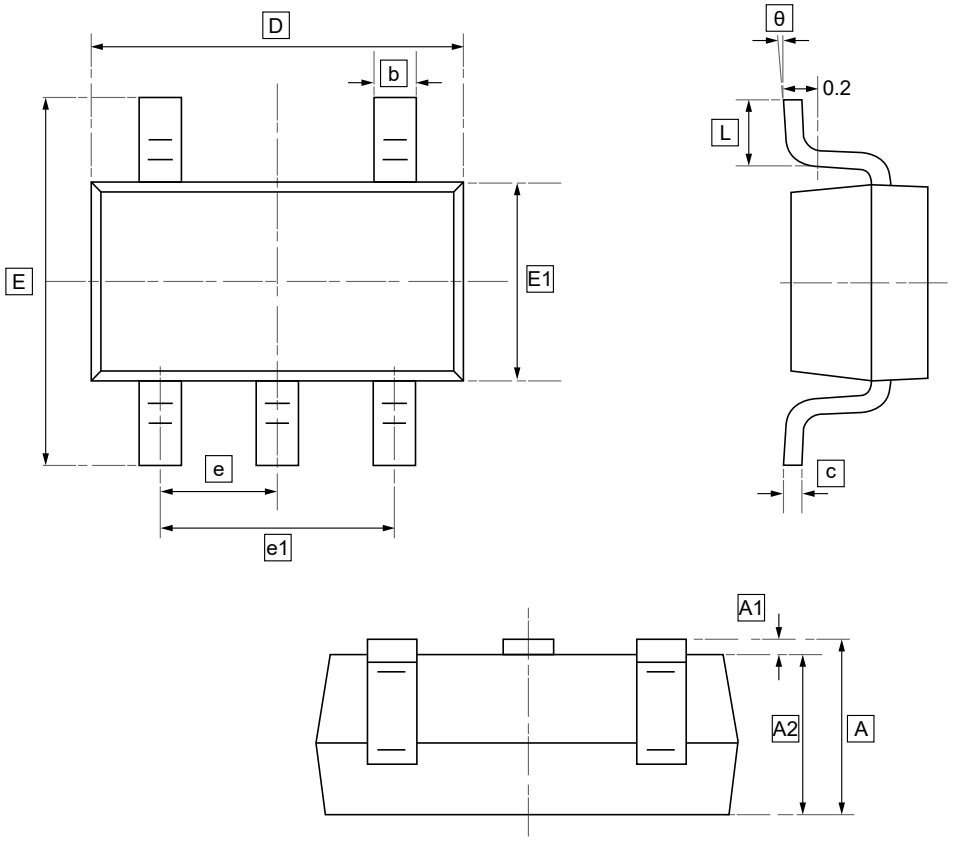

DIMENSIONS (mm are the original dimensions)

Symbol	A	A1	A2	b	c	D	E1	E	e	e1	L	θ
Min	1.050	0.000	1.050	0.300	0.100	2.820	1.500	2.650	0.950	1.800	0.300	0°
Max	1.250	0.100	1.150	0.500	0.200	3.020	1.700	2.950	BSC	2.000	0.600	8°

11.2 MSOP-8 Package Outline Dimensions

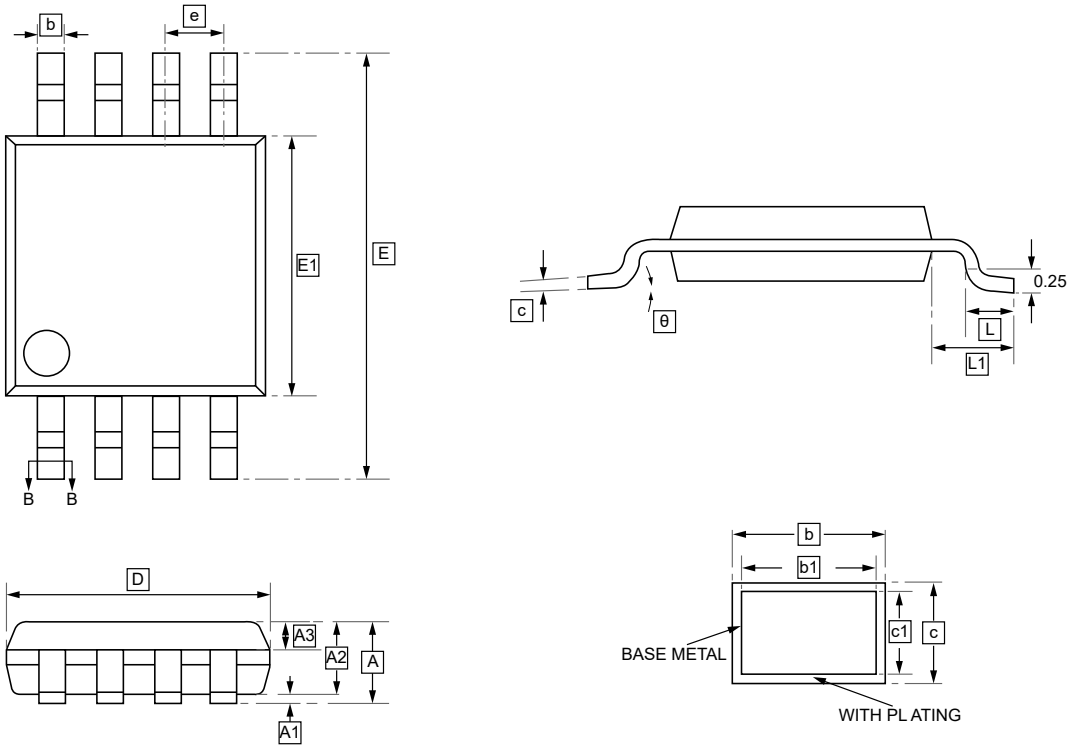

DIMENSIONS (mm are the original dimensions)

Symbol	A	A1	A2	A3	b	b1	c	c1	D	E	E1	e
Min	-	0.05	0.75	0.30	0.28	0.27	0.15	0.14	2.90	4.70	2.90	0.65
Max	1.10	0.15	0.95	0.40	0.36	0.33	0.19	0.16	3.10	5.10	3.10	BSC

Symbol	L	L1	θ
Min	0.40	0.95	0°
Max	0.70	REF	8°

11.3 SOP-8 Package Outline Dimensions

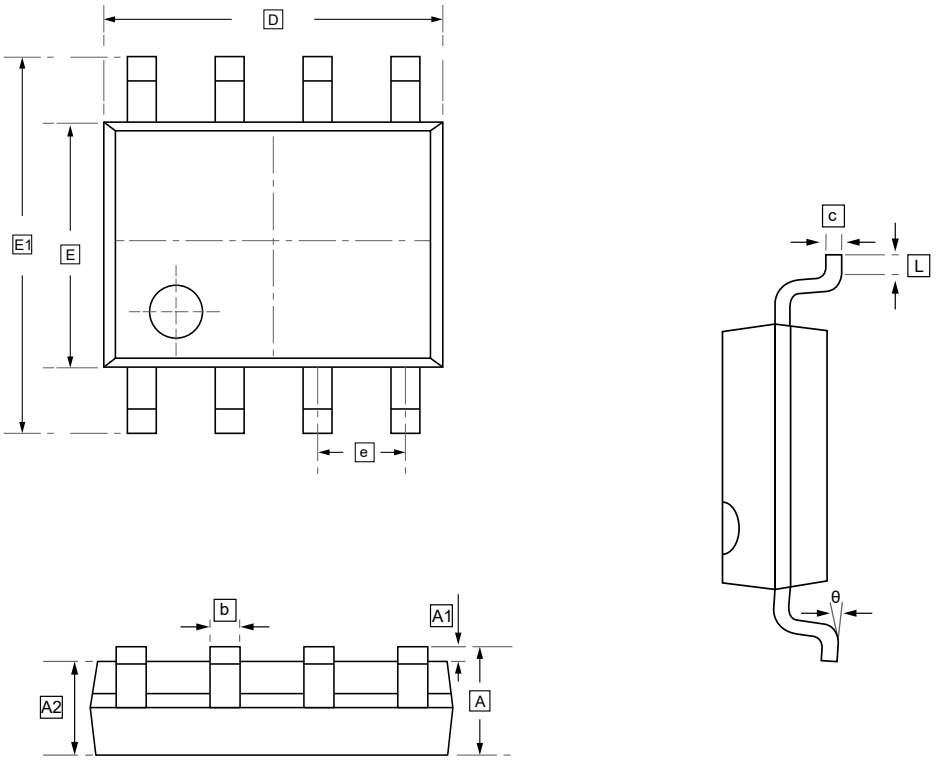

DIMENSIONS (mm are the original dimensions)

Symbol	A	A1	A2	b	c	D	E	E1	e	L	θ
Min	1.350	0.000	1.350	0.330	0.170	4.700	3.800	5.800	1.270	0.400	0°
Max	1.750	0.100	1.550	0.510	0.250	5.100	4.000	6.200	BSC	1.270	8°

11.4 TSSOP-14 Package Outline Dimensions

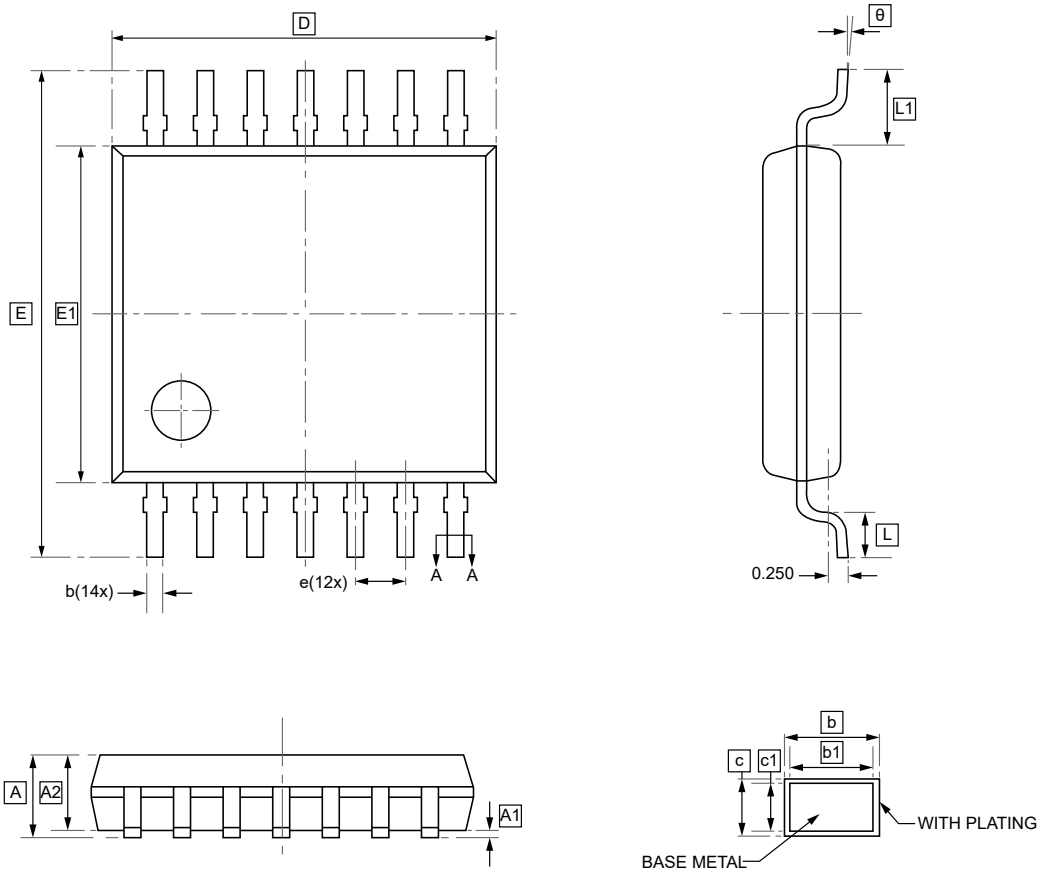

DIMENSIONS (mm are the original dimensions)

Symbol	A	A1	A2	b	b1	c	c1	D	E	E1	e	L1
Min	-	0.05	0.90	0.20	0.19	0.13	0.120	4.90	6.20	4.30	0.65	0.85
Max	1.20	0.15	1.05	0.28	0.25	0.17	0.14	5.10	6.60	4.50	BSC	1.15

Symbol	L	θ
Min	0.45	0°
Max	0.75	8°

11.5 TSSOP-8 Package Outline Dimensions

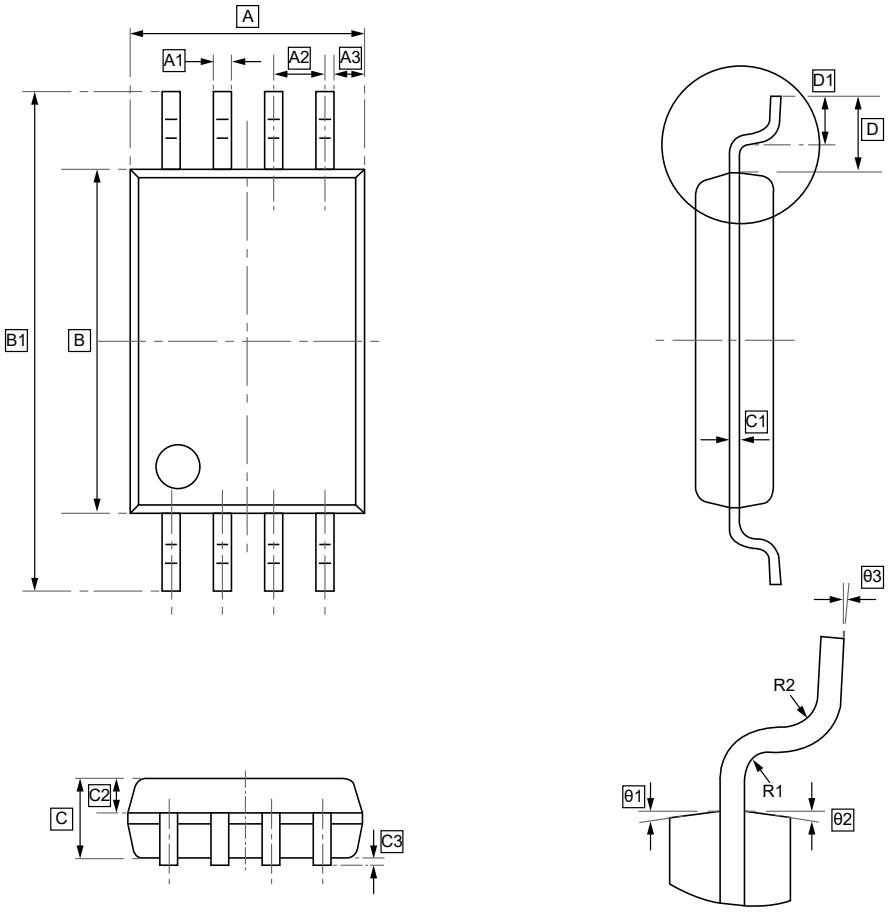

DIMENSIONS (mm are the original dimensions)

Symbol	A	A1	A2	A3	B	B1	C	C1	C2	C3	D	D1
Min	2.90	0.20	0.65	0.36	4.30	6.30	0.95	0.127	0.39	0.05	1.00	0.50
Max	3.10	0.30	TYP	0.46	4.50	6.50	1.05	TYP	0.49	0.15	REF	0.70

Symbol	R1	R2	θ1	θ2	θ3
Min	0.15	0.15	12°	12°	0°
Max	TYP	TYP	TYP4	TYP4	7°

11.6 SOP-14 Package Outline Dimensions

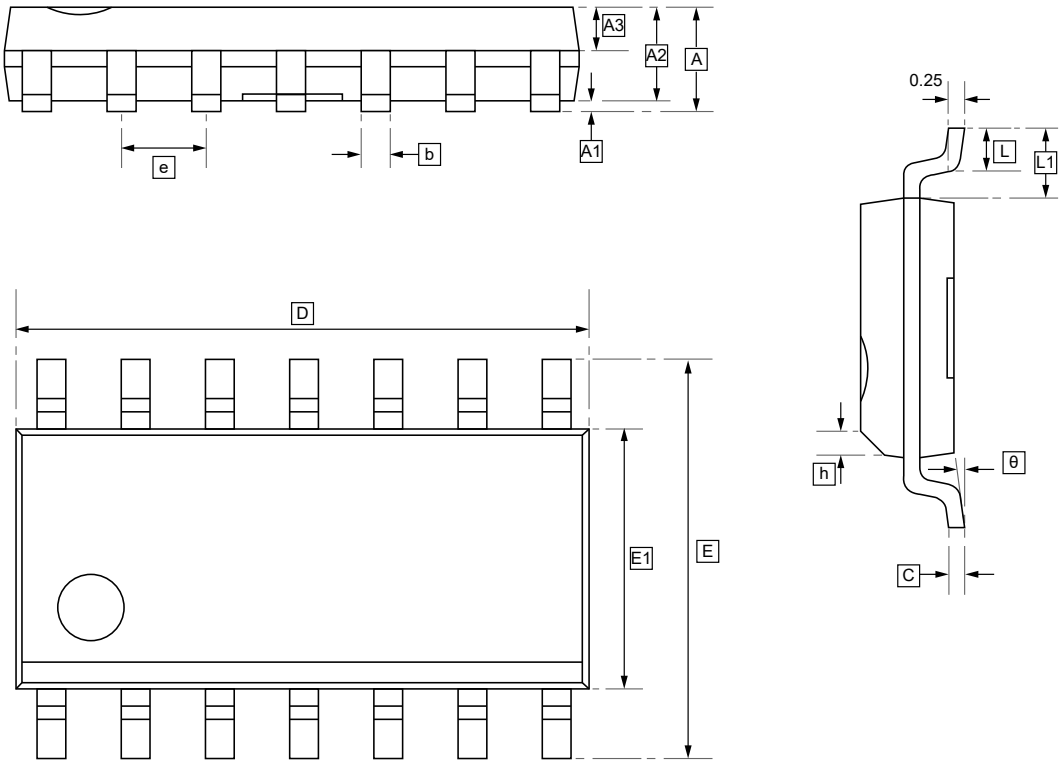

DIMENSIONS (mm are the original dimensions)

Symbol	A	A1	A2	A3	b	C	D	E	E1	e	h	L
Min	-	0.05	1.35	0.65	0.203	0.17	8.45	5.80	3.80	1.24	0.25	0.40
Max	1.75	0.25	1.55	0.75	0.305	0.25	8.85	6.20	4.00	1.30	0.50	0.80

Symbol	L1	θ
Min	1.00	0°
Max	1.10	8°

12.Ordering Information

SOT23-5

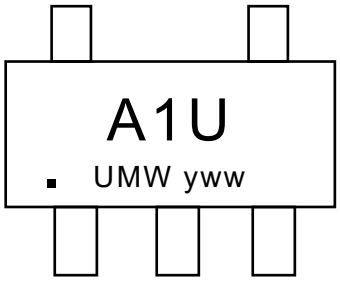

y: Year Code
ww: Week Code

SOP-8

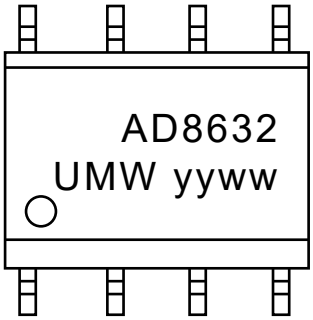

yy: Year Code
ww: Week Code

TSSOP-8

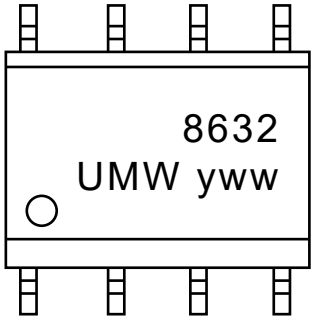

y: Year Code
ww: Week Code

SOP-14

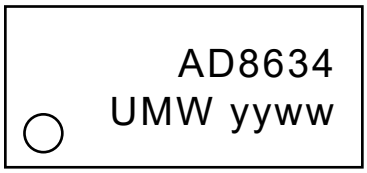

yy: Year Code
ww: Week Code

Order Code	Marking	Package	Base QTY	Delivery Mode
UMW AD8631ARTZ	A1U	SOT23-5	3000	Tape and reel
UMW AD8632ARZ	AD8632	SOP-8	2500	Tape and reel
UMW AD8632ARM	AD8632	MSOP-8	4000	Tape and reel
UMW AD8632ART	8632	TSSOP-8	4000	Tape and reel
UMW AD8634HRZN	AD8634	SOP-14	2500	Tape and reel

13.Disclaimer

UMW reserves the right to make changes to all products, specifications. Customers should obtain the latest version of product documentation and verify the completeness and currency of the information before placing an order.

When applying our products, please do not exceed the maximum rated values, as this may affect the reliability of the entire system. Under certain conditions, any semiconductor product may experience faults or failures. Buyers are responsible for adhering to safety standards and implementing safety measures during system design, prototyping, and manufacturing when using our products to prevent potential failure risks that could lead to personal injury or property damage.

Unless explicitly stated in writing, UMW products are not intended for use in medical, life-saving, or life-sustaining applications, nor for any other applications where product failure could result in personal injury or death. If customers use or sell the product for such applications without explicit authorization, they assume all associated risks.

When reselling, applying, or exporting, please comply with export control laws and regulations of China, the United States, the United Kingdom, the European Union, and other relevant countries, regions, and international organizations.

This document and any actions by UMW do not grant any intellectual property rights, whether express or implied, by estoppel or otherwise. The product names and marks mentioned herein may be trademarks of their respective owners.