UMW AO6601

Dual 30V N-Channel MOSFET
Dual -30V P-Channel MOSFET

1.Description

The AO6601 uses advanced trench technology to provide excellent $R_{DS(ON)}$ and low gate charge. The complementary MOSFETs form a high-speed power inverter, suitable for a multitude of applications

2.1Features (N-Ch)

- $V_{DS\ (V)}$=30V, I_D=3.4A(V_{GS}=10V)
- $R_{DS(ON)}$<60mΩ(V_{GS}=10V)
- $R_{DS(ON)}$<70mΩ(V_{GS}=4.5V)
- $R_{DS(ON)}$<90mΩ(V_{GS}=2.5V)

2.2Features (P-Ch)

- $V_{DS\ (V)}$=-30V
- I_D=-2.3A(V_{GS}=-10V)
- $R_{DS(ON)}$<115mΩ(V_{GS}=-10V)
- $R_{DS(ON)}$<150mΩ(V_{GS}=-4.5V)
- $R_{DS(ON)}$<200mΩ(V_{GS}=-2.5V)

3.Pinning information

Pin	Symbol	Description
1,3	G1, G2	GATE
5,2	S1, S2	SOURCE
6,4	D1, D2	DRAIN

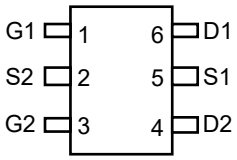

SOT23-6

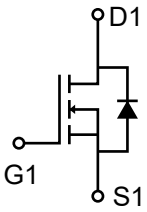

n-channel

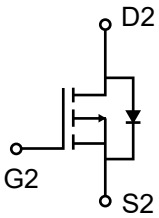

p-channel

4.Absolute Maximum Ratings T_A= 25°C

Parameter		Symbol	Max n-channel	Max p-channel	Units
Drain-Source Voltage		V_{DS}	30	-30	V
Gate-Source Voltage		V_{GS}	±12	±12	V
Continuous Drain Current	T_A=25°C	I_D	3.4	-2.3	A
	T_A=70°C		2.7	-1.8	
Pulsed Drain Current [C]		I_{DM}	20	-15	
Power Dissipation [B]	T_A=25°C	P_D	1.15	1.15	W
	T_A=70°C		0.73	0.73	W
Junction and Storage Temperature Range		T_J, T_{STG}	-55 to 150	-55 to 150	°C

5.Thermal Characteristics

Parameter		Symbol	Typ	Max	Units
Maximum Junction-to-Ambient	t ≤ 10s	$R_{\theta JA}$	78	110	°C/W
Maximum Junction-to-Ambient	Steady-State		106	150	°C/W
Maximum Junction-to-Lead	Steady-State	$R_{\theta JL}$	64	80	°C/W

6.Electrical Characteristic (T_J=25°C unless otherwise noted)

Parameter	Symbol	Conditions	Min	Typ	Max	Units
STATIC PARAMETERS						
Drain-Source Breakdown Voltage	BV_{DSS}	I_D=250μA, V_{GS}=0V	30			V
Zero Gate Voltage Drain Current	I_{DSS}	V_{DS}=30V, V_{GS}=0V			1	μA
		T_J=55°C			5	
Gate-Body leakage current	I_{GSS}	V_{DS}=0V, V_{GS}=±12V			±100	nA
Gate Threshold Voltage	$V_{GS(th)}$	V_{DS}=V_{GS}, I_D=250μA	0.5	1	1.5	V
On state drain current	$I_{D(ON)}$	V_{GS}=10V, V_{DS}=5V	20			A
Static Drain-Source On-Resistance	$R_{DS(ON)}$	V_{GS}=10V, I_D=3.4A		46	60	mΩ
		V_{GS}=4.5V, I_D=3A		50	70	mΩ
		V_{GS}=2.5V, I_D=2A		62	90	mΩ
Forward Transconductance	g_{FS}	V_{DS}=5V, I_D=3.4A		14		S
Diode Forward Voltage	V_{SD}	I_S=1A, V_{GS}=0V		0.75	1	V
Maximum Body-Diode Continuous Current	I_S				1.5	A
DYNAMIC PARAMETERS						
Input Capacitance	C_{iss}	V_{GS}=0V, V_{DS}=15V, f=1MHz	185	235	285	pF
Output Capacitance	C_{oss}		25	35	45	pF
Reverse Transfer Capacitance	C_{rss}		10	18	25	pF
Gate resistance	R_g	V_{GS}=0V, V_{DS}=0V, f=1MHz	0.9	1.8	2.7	Ω
SWITCHING PARAMETERS						
Total Gate Charge	Q_g(10V)	V_{GS}=10V, V_{DS}=15V, I_D=3.4A		10	12	nC
Total Gate Charge	Q_g(4.5V)			4.7	6	nC
Gate Source Charge	Q_{gs}			0.95		nC
Gate Drain Charge	Q_{gd}			1.6		nC
Turn-On DelayTime	$t_{D(on)}$	R_{GEN}=3Ω		3.5		ns
Turn-Off DelayTime	$t_{D(off)}$			17.5		ns
Turn-Off Fall Time	t_f			2.5		ns
Body Diode Reverse Recovery Time	t_{rr}	I_F=3.4A, dI/dt=100A/μs		8.5	12	ns
Body Diode Reverse Recovery Charge	Q_{rr}	I_F=3.4A, dI/dt=100A/μs		2.55	4	nC

A: The value of $R_{\theta JA}$ is measured with the device mounted on 1in ^{2} FR-4 board with 2oz. Copper, in a still air environment with T_A=25°C. The value in any given application depends on the user's specific board design.

B. The power dissipation P_D is based on $T_{J(MAX)}$=150°C, using ≤ 10s junction-to-ambient thermal resistance.

C. Repetitive rating, pulse width limited by junction temperature $T_{J(MAX)}$=150°C. Ratings are based on low frequency and duty cycles to keep initial T_J=25°C.

D. The $R_{\theta JA}$ is the sum of the thermal impedence from junction to lead $R_{\theta JL}$ and lead to ambient.

E. The static characteristics in Figures 1 to 6 are obtained using <300μs pulses, duty cycle 0.5% max.

F. These curves are based on the junction-to-ambient thermal impedence which is measured with the device mounted on 1in ^{2} FR-4 board with 2oz. Copper, assuming a maximum junction temperature of $T_{J(MAX)}$=150°C. The SOA curve provides a single pulse rating

7.1Typical characteristic

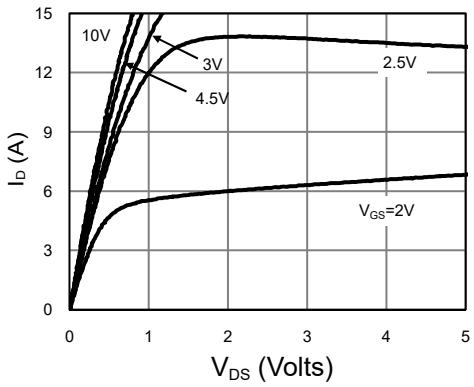

Figure 1: On-Region Characteristics(Note E)

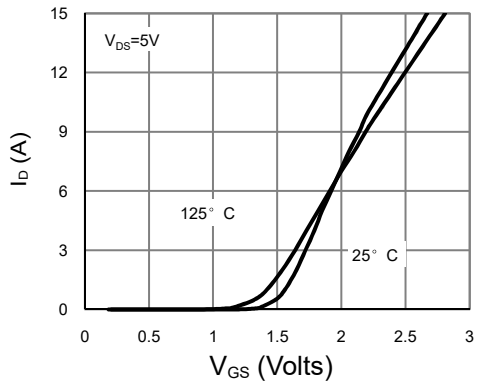

Figure 2: Transfer Characteristics(Note E)

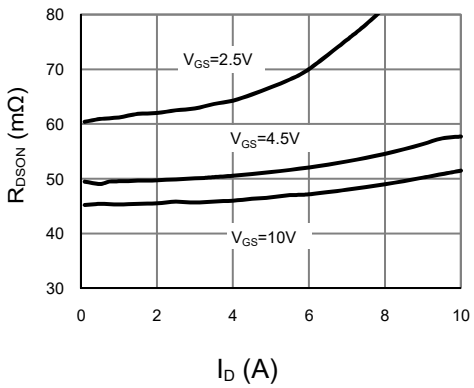

Figure 3: On-Resistance vs. Drain Current and Gate Voltage(Note E)

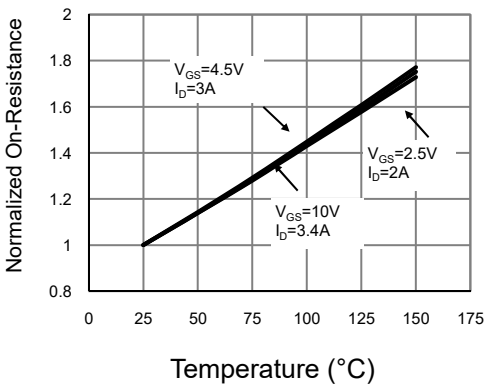

Figure 4: On-Resistance vs. Junction Temperature(Note E)

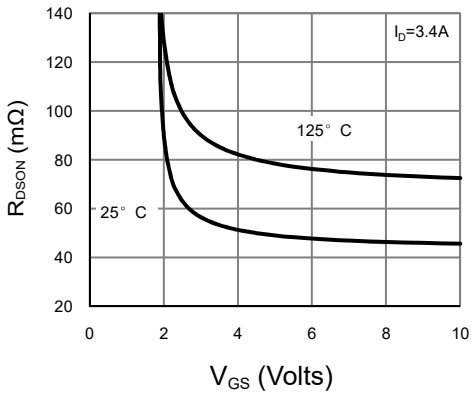

Figure 5: On-Resistance vs. Gate-Source Voltage(Note E)

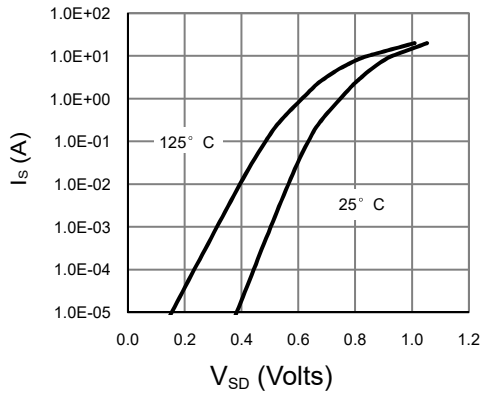

Figure 6: Body-Diode Characteristics(Note E)

7.2Typical characteristic

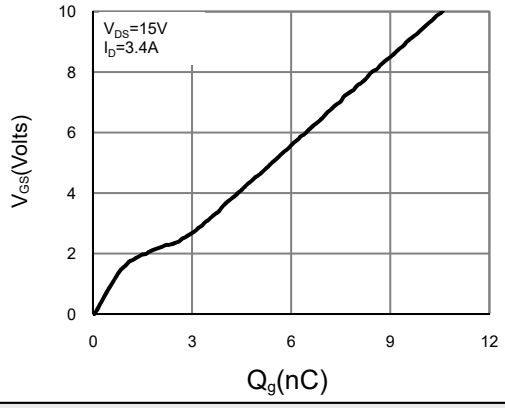

Figure 7: Gate-Charge Characteristics

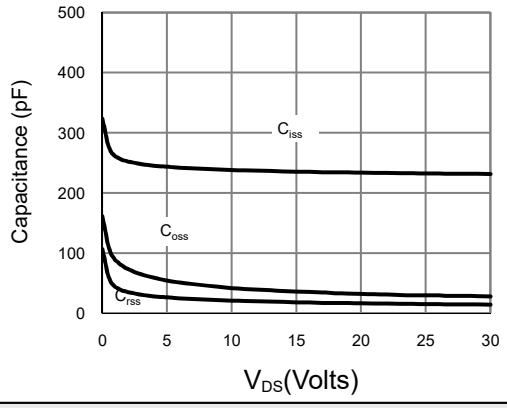

Figure 8: Capacitance Characteristics

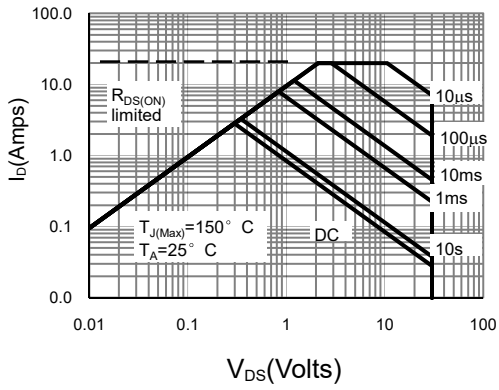

Figure 9: Maximum Forward Biased Safe Operating Area (Note F)

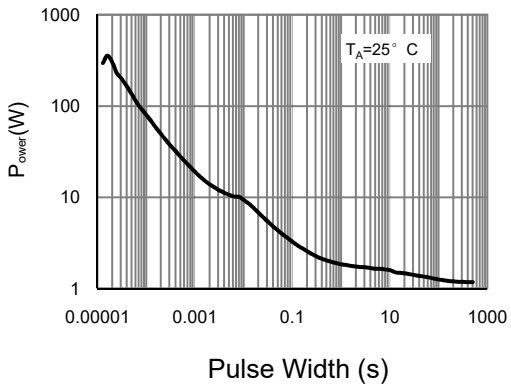

Figure 10: Single Pulse Power Rating Junction-to-Ambient (Note F)

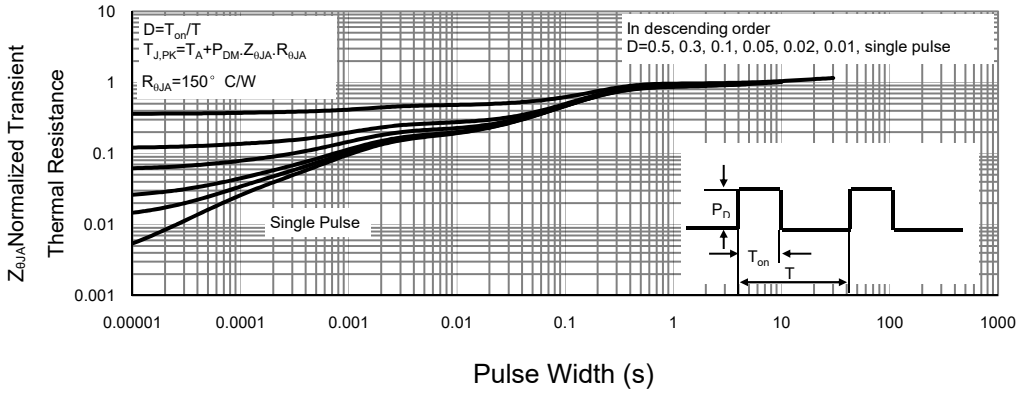

Figure 11: Normalized Maximum Transient Thermal Impedance (Note F)

7.3Typical characteristic

Gate Charge Test Circuit & Waveform

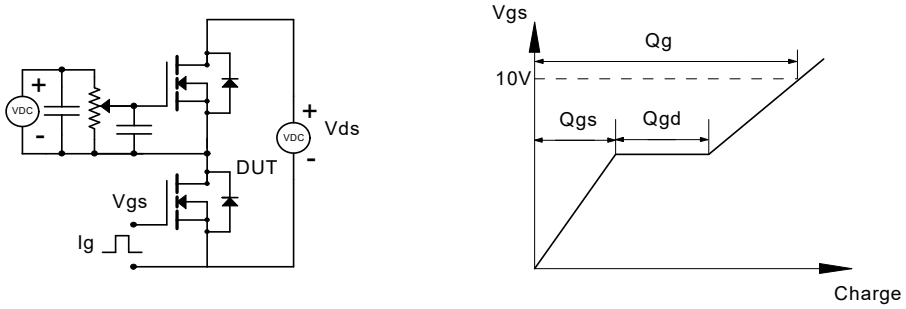

Resistive Switching Test Circuit & Waveforms

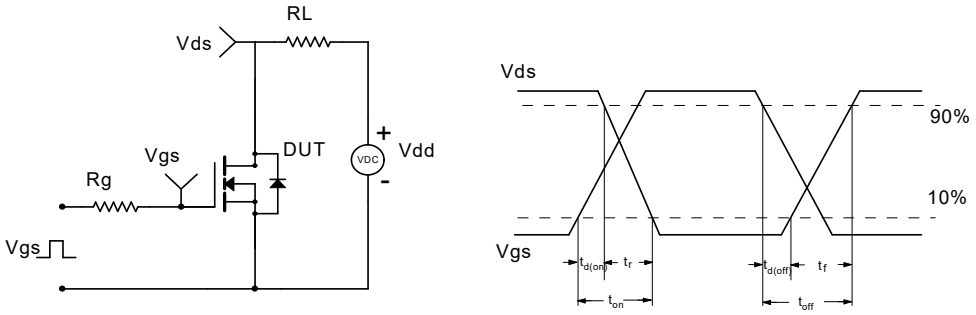

Unclamped Inductive Switching (UIS) Test Circuit & Waveforms

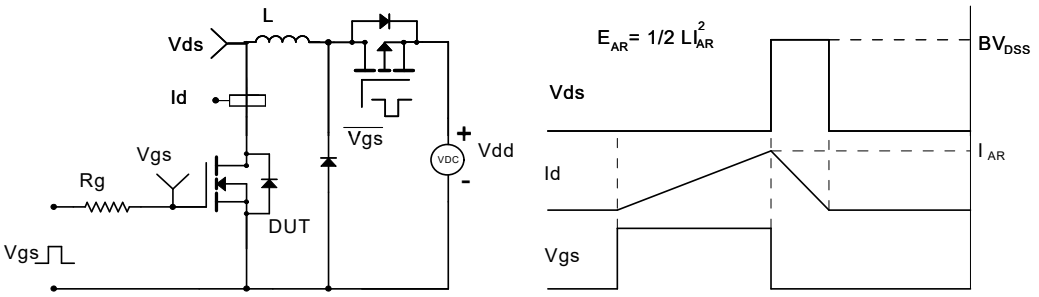

Diode Recovery Test Circuit & Waveforms

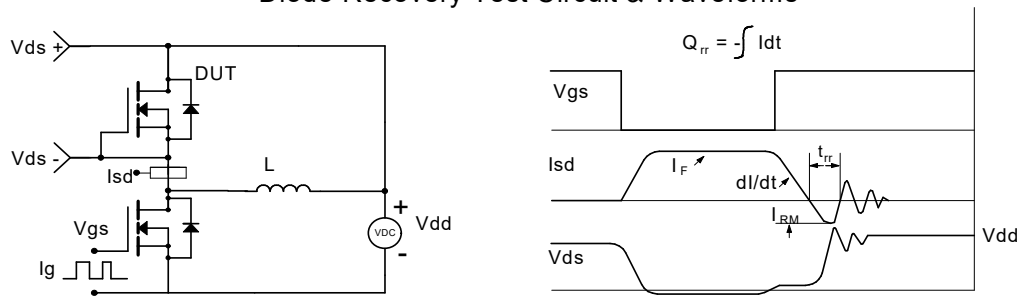

8.Electrical Characteristic (T_J=25°C unless otherwise noted)

Parameter	Symbol	Conditions	Min	Typ	Max	Units
STATIC PARAMETERS						
Drain-Source Breakdown Voltage	BV_{DSS}	I_D=-250μA, V_{GS}=0V	-30			V
Zero Gate Voltage Drain Current	I_{DSS}	V_{DS}=-30V, V_{GS}=0V			-1	μA
Gate-Body leakage current	I_{GSS}	V_{DS}=0V, V_{GS}=±12V			±100	nA
Gate Threshold Voltage	$V_{GS(th)}$	V_{DS}=V_{GS}, I_D=-250μA	-0.6	-1	-1.4	V
On state drain current	$I_{D(ON)}$	V_{GS}=-10V, V_{DS}=-5V	-15			A
Static Drain-Source On-Resistance	$R_{DS(ON)}$	V_{GS}=-10V, I_D=-2.3A		88	115	mΩ
		V_{GS}=-4.5V, I_D=-2A		103	150	mΩ
		V_{GS}=-2.5V, I_D=-1A		139	200	mΩ
Forward Transconductance	g_{FS}	V_{DS}=-5V, I_D=-2.3A		8		S
Diode Forward Voltage	V_{SD}	I_S=-1A, V_{GS}=0V		-0.78	-1	V
Maximum Body-Diode Continuous Current	I_S				-1.5	A
DYNAMIC PARAMETERS						
Input Capacitance	C_{iss}	V_{GS}=0V, V_{DS}=-15V, f=1MHz	205	260	315	pF
Output Capacitance	C_{oss}		25	37	50	pF
Reverse Transfer Capacitance	C_{rss}		10	20	30	pF
Gate resistance	R_g	V_{GS}=0V, V_{DS}=0V, f=1MHz	4	8	12	Ω
SWITCHING PARAMETERS						
Total Gate Charge	Q_g(10V)	V_{GS}=10V, V_{DS}=-15V I_D=-2.3A	4.5	5.9	7	nC
Total Gate Charge	Q_g(4.5V)		2	2.8	4	nC
Gate Source Charge	Q_{gs}			0.7		nC
Gate Drain Charge	Q_{gd}			1		nC
Turn-On DelayTime	$t_{D(on)}$	R_{GEN}=3Ω		6		ns
Turn-Off DelayTime	$t_{D(off)}$			20		ns
Turn-Off Fall Time	t_f			5		ns
Body Diode Reverse Recovery Time	t_{rr}	I_F=-2.3A, dI/dt=100A/μs		11.5	15	ns
Body Diode Reverse Recovery Charge	Q_{rr}	I_F=-2.3A, dI/dt=100A/μs		4.5	6	nC

A. The value of $R_{\theta JA}$ is measured with the device mounted on 1in ^{2} FR-4 board with 2oz. Copper, in a still air environment with T_A=25°C. The value in any given application depends on the user's specific board design.

B. The power dissipation P_D is based on $T_{J(MAX)}$=150°C, using ≤ 10s junction-to-ambient thermal resistance.

C. Repetitive rating, pulse width limited by junction temperature $T_{J(MAX)}$=150°C. Ratings are based on low frequency and duty cycles to keep initial T_J=25°C.

D. The $R_{\theta JA}$ is the sum of the thermal impedence from junction to lead $R_{\theta JL}$ and lead to ambient.

E. The static characteristics in Figures 1 to 6 are obtained using <300μs pulses, duty cycle 0.5% max.

F. These curves are based on the junction-to-ambient thermal impedence which is measured with the device mounted on 1in ^{2} FR-4 board with 2oz. Copper, assuming a maximum junction temperature of $T_{J(MAX)}$=150°C. The SOA curve provides a single pulse rating

9.1Typical characteristic

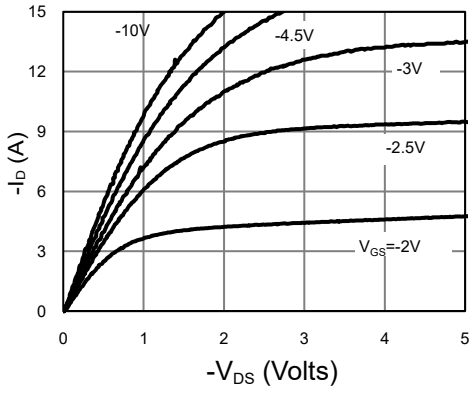

Figure 1: On-Region Characteristics(Note E)

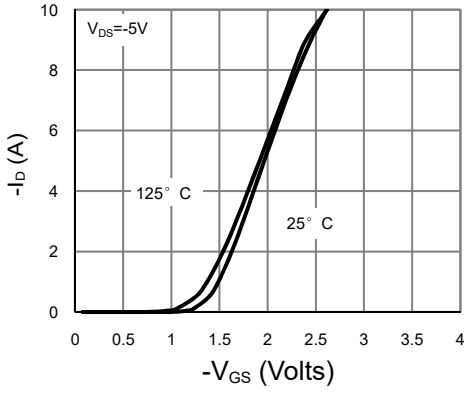

Figure 2: Transfer Characteristics(Note E)

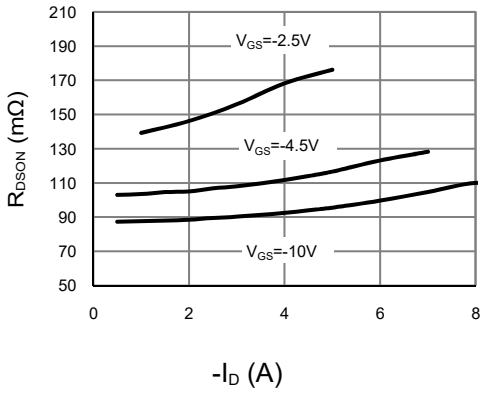

Figure 3: On-Resistance vs. Drain Current and Gate Voltage(Note E)

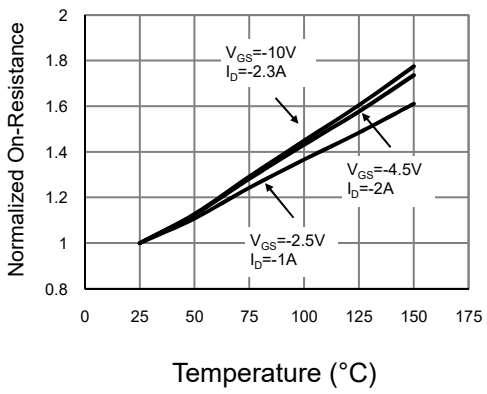

Figure 4: On-Resistance vs. Junction Temperature(Note E)

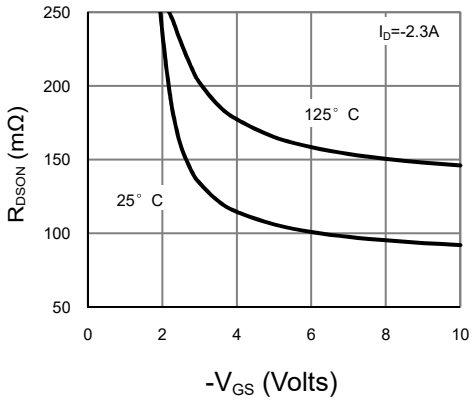

Figure 5: On-Resistance vs. Gate-Source Voltage(Note E)

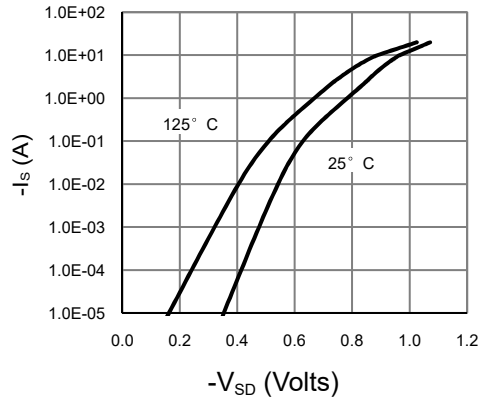

Figure 6: Body-Diode Characteristics(Note E)

9.2Typical characteristic

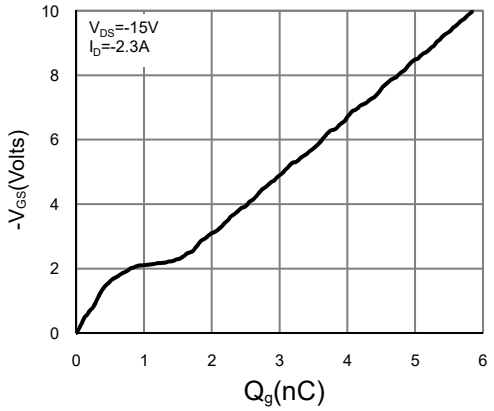

Figure 7: Gate-Charge Characteristics

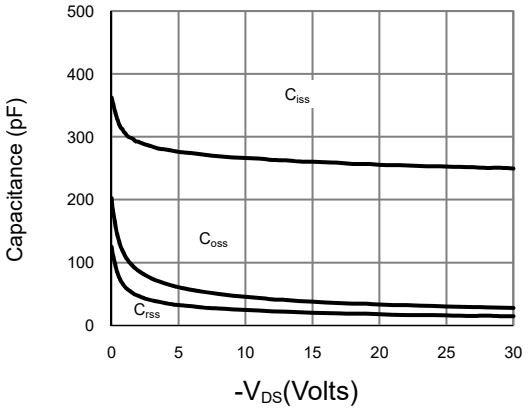

Figure 8: Capacitance Characteristics

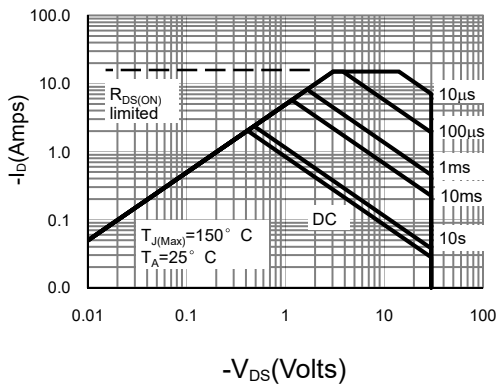

Figure 9: Maximum Forward Biased Safe Operating Area (Note F)

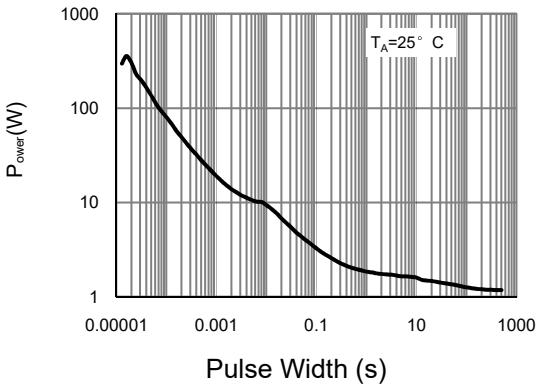

Figure 10: Single Pulse Power Rating Junction-to-Ambient (Note F)

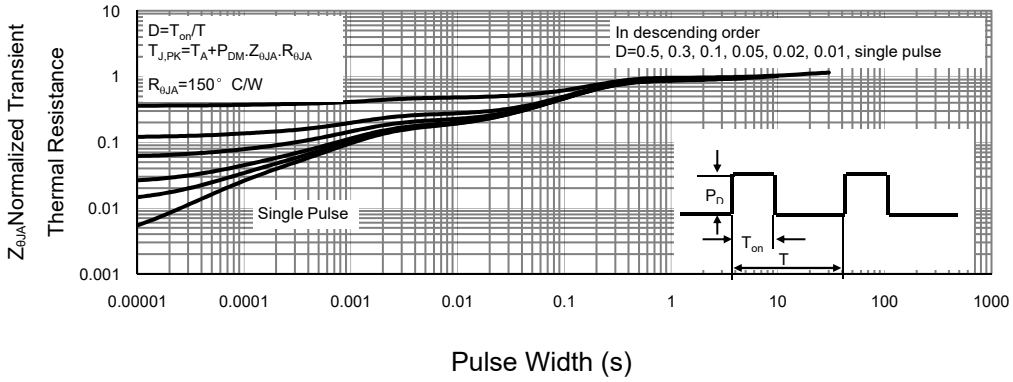

Figure 11: Normalized Maximum Transient Thermal Impedance (Note F)

9.3Typical characteristic

Gate Charge Test Circuit & Waveform

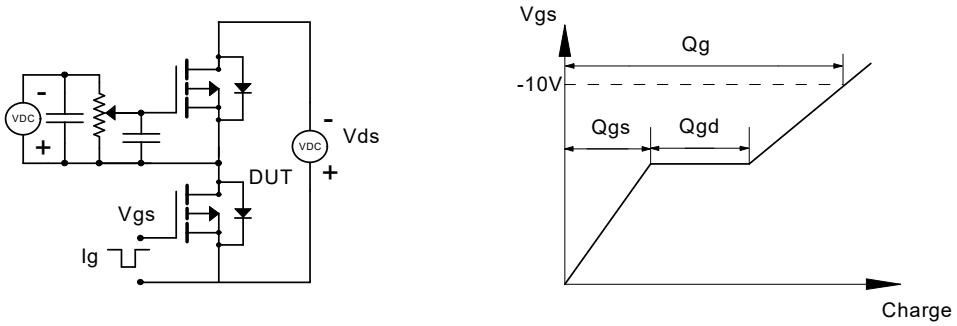

Resistive Switching Test Circuit & Waveforms

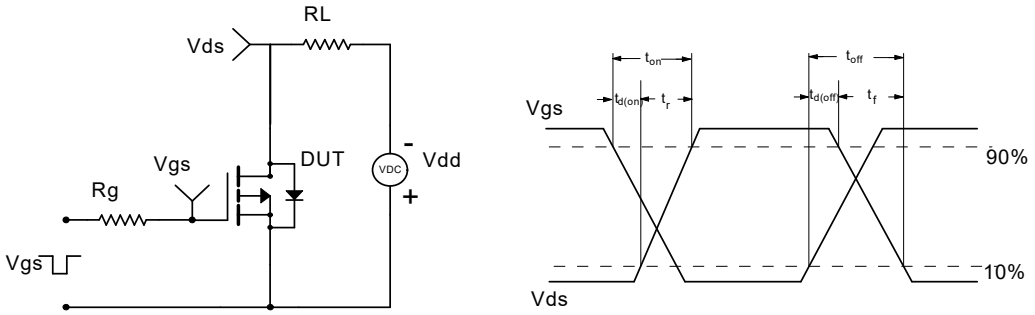

Unclamped Inductive Switching (UIS) Test Circuit & Waveforms

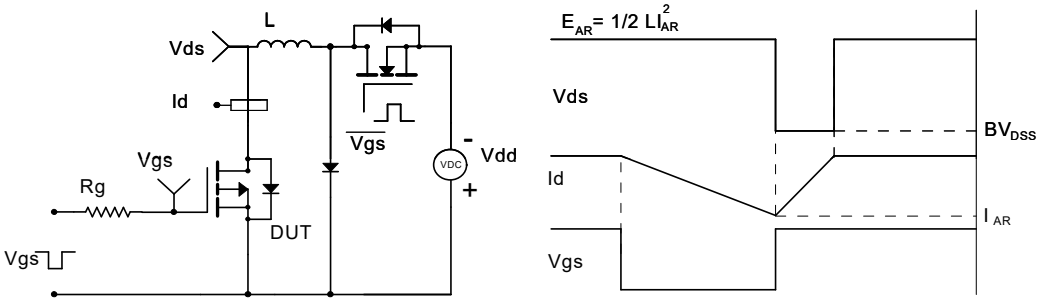

Diode Recovery Test Circuit & Waveforms

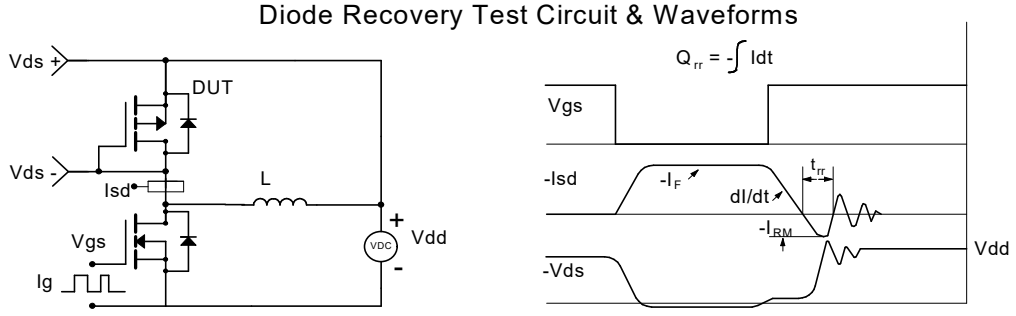

10.SOT23-6 Package Outline Dimensions

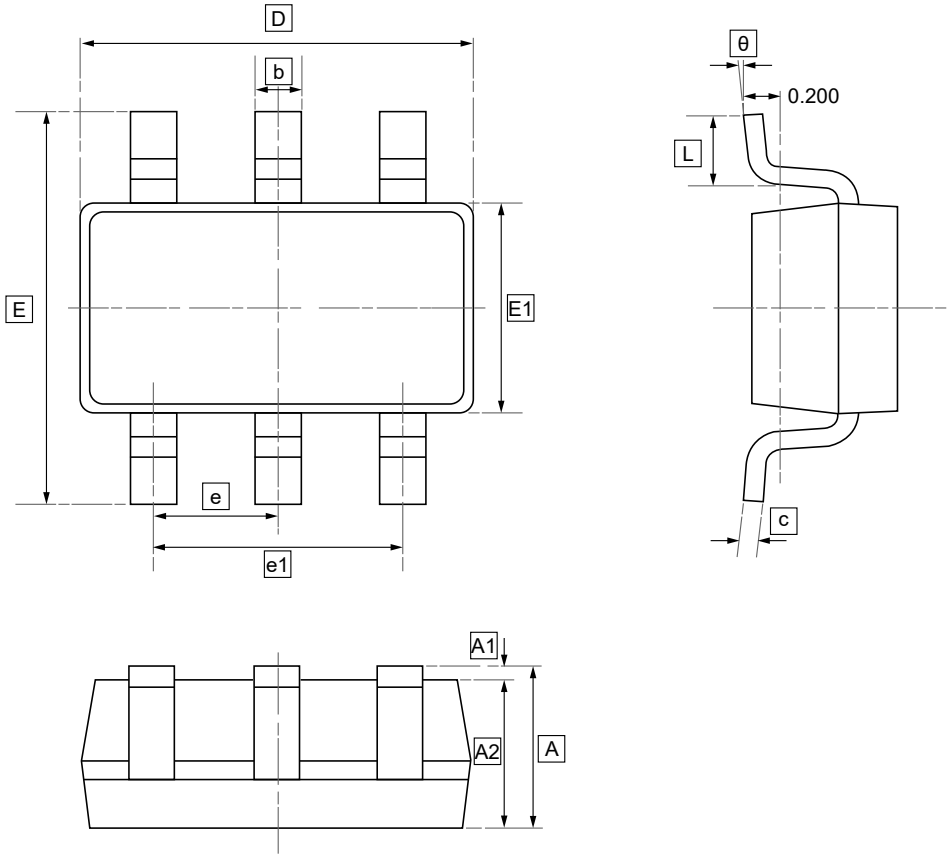

DIMENSIONS (mm are the original dimensions)

Symbol	A	A1	A2	b	c	D	E1	E	e	e1	L	θ
Min	1.050	0.000	1.050	0.300	0.100	2.820	1.500	2.650	0.950	1.800	0.300	0°
Max	1.250	0.100	1.150	0.500	0.200	3.020	1.700	2.950	BSC	2.000	0.600	8°

11.Ordering information

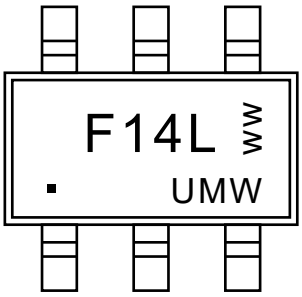

ww: Week Code

Order Code	Package	Base QTY	Delivery Mode
UMW AO6601	SOT23-6	3000	Tape and reel

12.Disclaimer

UMW reserves the right to make changes to all products, specifications. Customers should obtain the latest version of product documentation and verify the completeness and currency of the information before placing an order.

When applying our products, please do not exceed the maximum rated values, as this may affect the reliability of the entire system. Under certain conditions, any semiconductor product may experience faults or failures. Buyers are responsible for adhering to safety standards and implementing safety measures during system design, prototyping, and manufacturing when using our products to prevent potential failure risks that could lead to personal injury or property damage.

Unless explicitly stated in writing, UMW products are not intended for use in medical, life-saving, or life-sustaining applications, nor for any other applications where product failure could result in personal injury or death. If customers use or sell the product for such applications without explicit authorization, they assume all associated risks.

When reselling, applying, or exporting, please comply with export control laws and regulations of China, the United States, the United Kingdom, the European Union, and other relevant countries, regions, and international organizations.

This document and any actions by UMW do not grant any intellectual property rights, whether express or implied, by estoppel or otherwise. The product names and marks mentioned herein may be trademarks of their respective owners.