UMW AOD442

60V N-Channel MOSFET

1.Description

The AOD442 used advanced trench technology to provide excellent $R_{DS(ON)}$ and low gate charge. Those devices are suitable for use as a load switch or in PWM applications.

2.Features

- $V_{DS\ (V)}$=60V
- I_D=37A(V_{GS}=10V)
- $R_{DS(ON)}$<20mΩ(V_{GS}=10V)
- $R_{DS(ON)}$<25mΩ(V_{GS}=4.5V)

3.Pinning information

Pin	Symbol	Description
1	G	GATE
3	S	SOURCE
2	D	DRAIN

TO-252(DPAK) top view

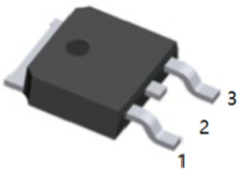

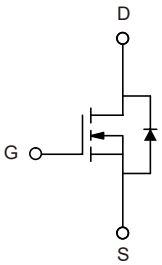

4.Absolute Maximum Ratings T_A= 25°C

Parameter		Symbol	Rating	Units
Drain-Source Voltage		V_{DS}	60	V
Gate-Source Voltage		V_{GS}	±20	
Continuous Drain Current [G]	T_C=25°C	I_D	37	A
	T_C=100°C		26	
Pulsed Drain Current [c]		I_{DM}	60	
Continuous Drain Current	T_A=25°C	I_{DSM}	7	
	T_A=70°C		5	
Avalanche Current [c]		I_{AS}, I_{AR}	30	
Avalanche energy L=0.1mH [c]		E_{AS}, E_{AR}	45	mJ
Power Dissipation [B]	T_C=25°C	P_D	60	W
	T_C=100°C		30	
Power Dissipation [A]	T_A=25°C	P_{DSM}	2.1	
	T_A=70°C		1.3	
Junction and Storage Temperature Range		T_J, T_{STG}	-55 to 175	°C

5.Thermal Characteristics

Parameter		Symbol	Typ	Max	Units
Maximum Junction-to-Ambient [A]	t ≤ 10s	$R_{\theta JA}$	17.4	25	°C/W
Maximum Junction-to-Ambient [AD]	Steady-State		51	60	°C/W
Maximum Junction-to-Case	Steady-State	$R_{\theta JC}$	1.8	2.5	°C/W

6.Electrical Characteristic (T_J=25°C unless otherwise noted)

Parameter	Symbol	Conditions	Min	Typ	Max	Units
Drain-Source Breakdown Voltage	BV_{DSS}	I_D=250μA, V_{GS}=0V	60			V
Zero Gate Voltage Drain Current	I_{DSS}	V_{DS}=48V, V_{GS}=0V			1	μA
		T_J=55°C			5	μA
Gate-Body leakage current	I_{GSS}	V_{DS}=0V, V_{GS}=±20V			100	nA
Gate Threshold Voltage	$V_{GS(th)}$	V_{DS}=V_{GS}, I_D=250μA	1.6	2.1	2.7	V
On state drain current	$I_{D(ON)}$	V_{GS}=10V, V_{DS}=5V	60			A
Static Drain-Source On-Resistance	$R_{DS(ON)}$	V_{GS}=10V, I_D=20A		16	20	mΩ
		V_{GS}=4.5V, I_D=20A		20	25	mΩ
Forward Transconductance	g_{FS}	V_{DS}=5V, I_D=20A		65		S
Diode Forward Voltage	V_{SD}	I_S=1A, V_{GS}=0V		0.7	1	V
Maximum Body-Diode Continuous Current	I_S				32	A
Input Capacitance	C_{iss}	V_{GS}=0V, V_{DS}=30V, f=1MHz	1535	1920	2300	pF
Output Capacitance	C_{oss}		108	155	200	pF
Reverse Transfer Capacitance	C_{rss}		70	116	165	pF
Gate resistance	R_g	V_{GS}=0V, V_{DS}=0V, f=1MHz	0.3	0.65	0.8	Ω
Total Gate Charge	Q_g(10V)	V_{GS}=10V, V_{DS}=30V, I_D=20A	38	47.6	68	nC
Total Gate Charge	Q_g(4.5V)		20	24.2	30	nC
Gate Source Charge	Q_{gs}		4.8	6	7	nC
Gate Drain Charge	Q_{gd}		8.5	14.4	20	nC
Turn-On DelayTime	$t_{D(on)}$	V_{GS}=10V, V_{DS}=30V, R_L=1.5Ω, R_{GEN}=3Ω		7.4		ns
Turn-On Rise Time	t_r			5.1		ns
Turn-Off DelayTime	$t_{D(off)}$			28.2		ns
Turn-Off Fall Time	t_f			5.5		ns
Body Diode Reverse Recovery Time	t_{rr}	I_F=20A, dI/dt=100A/μs		34	41	ns
Body Diode Reverse Recovery Charge	Q_{rr}	I_F=20A, dI/dt=100A/μs		46		nC

A. The value of $R_{\theta JA}$ is measured with the device mounted on 1in^2 FR-4 board with 2oz. Copper, in a still air environment with T_A =25°C. The Power dissipation P_{DSM} is based on $R_{\theta JA}$ and the maximum allowed junction temperature of 150°C. The value in any given application depends on the user's specific board design, and the maximum temperature of 175°C may be used if the PCB allows it.

B. The power dissipation P_D is based on $T_{J(MAX)}$=175°C, using junction-to-case thermal resistance, and is more useful in setting the upper dissipation limit for cases where additional heatsinking is used.

C. Repetitive rating, pulse width limited by junction temperature $T_{J(MAX)}$=175°C. Ratings are based on low frequency and duty cycles to keep initial T_J =25°C.

D. The $R_{\theta JA}$ is the sum of the thermal impedence from junction to case $R_{\theta JC}$ and case to ambient.

E. The static characteristics in Figures 1 to 6 are obtained using <300μs pulses, duty cycle 0.5% max.

F. These curves are based on the junction-to-case thermal impedence which is measured with the device mounted to a large heatsink, assuming a maximum junction temperature of $T_{J(MAX)}$=175°C. The SOA curve provides a single pulse rating.

G. The maximum current rating is package limited.

H. These tests are performed with the device mounted on 1 in ^{2} FR-4 board with 2oz. Copper, in a still air environment with T_A=25°C.

7.1Typical characteristic

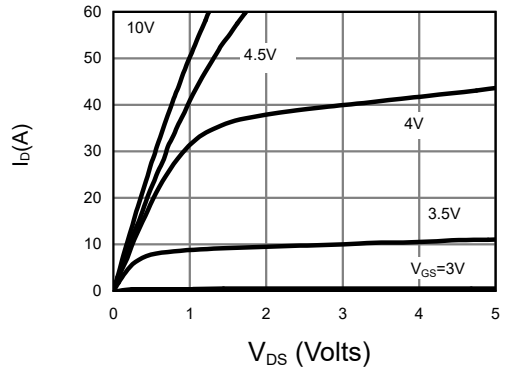

Fig 1: On-Region Characteristics (Note E)

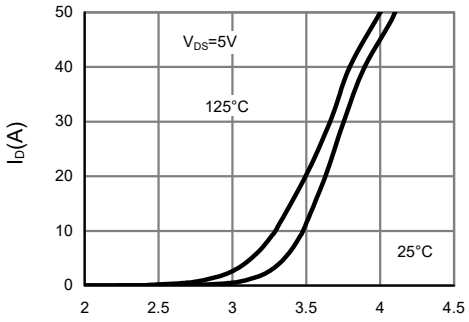

Figure 2: Transfer Characteristics (Note E)

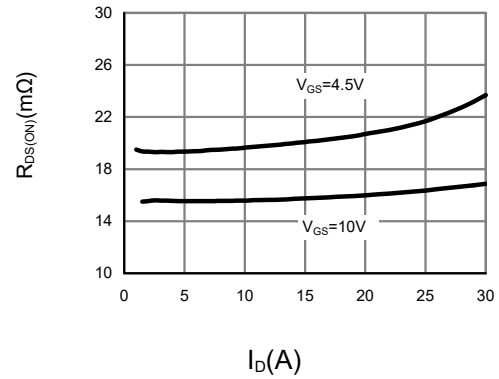

Figure 3: On-Resistance vs. Drain Current and Gate Voltage (Note E)

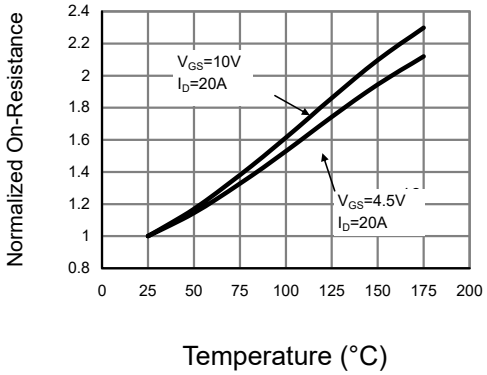

Figure 4: On-Resistance vs. Junction Temperature (Note E)

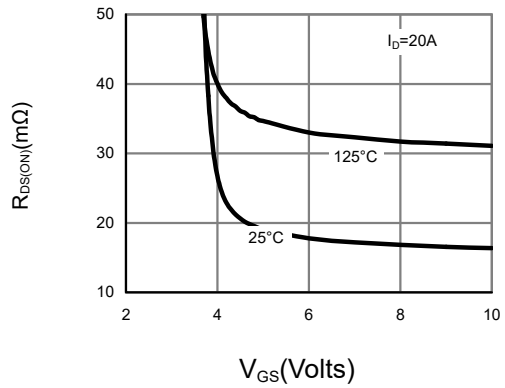

Figure 5: On-Resistance vs. Gate-Source Voltage (Note E)

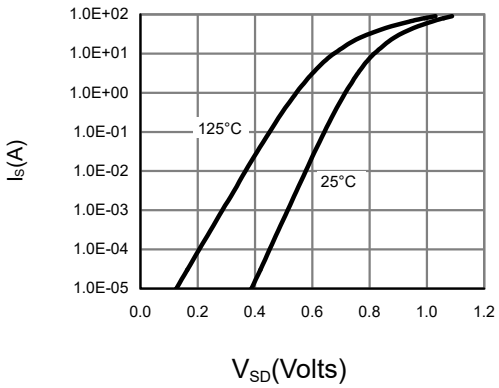

Figure 6: Body-Diode Characteristics(Note E)

7.2Typical characteristic

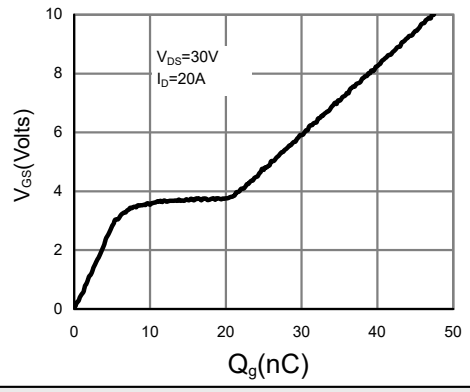

Figure 7: Gate-Charge Characteristics

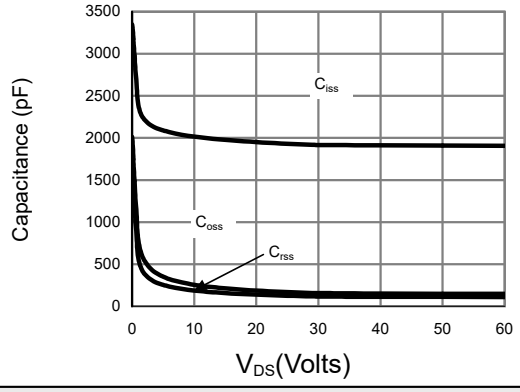

Figure 8: Capacitance Characteristics

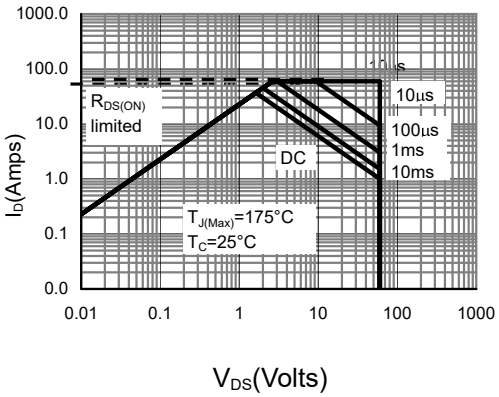

Figure 9: Maximum Forward Biased Safe Operating Area (Note F)

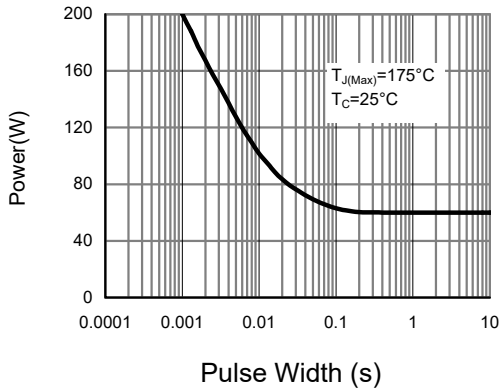

Figure 10: Single Pulse Power Rating Junction-to Case (Note F)

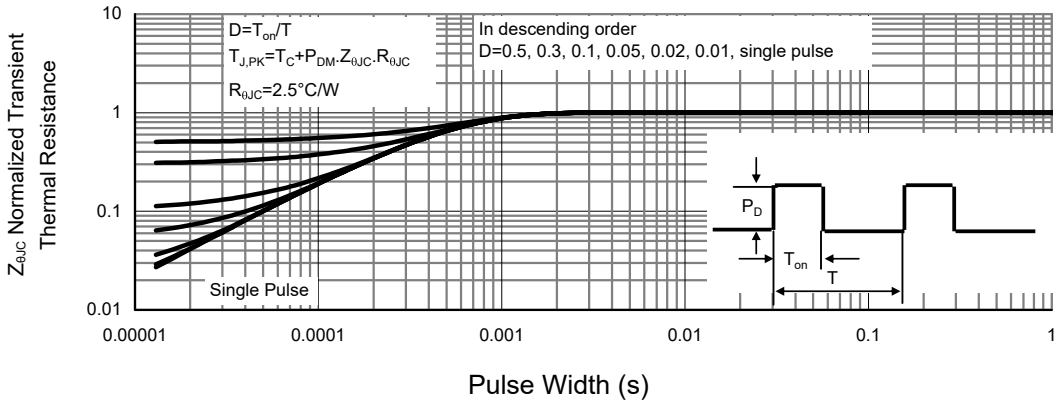

Figure 11: Normalized Maximum Transient Thermal Impedance (Note F)

7.3Typical characteristic

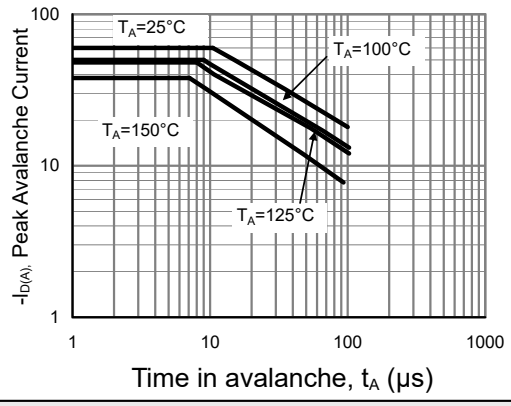

Figure 12: Single Pulse Avalanche capability (Note C)

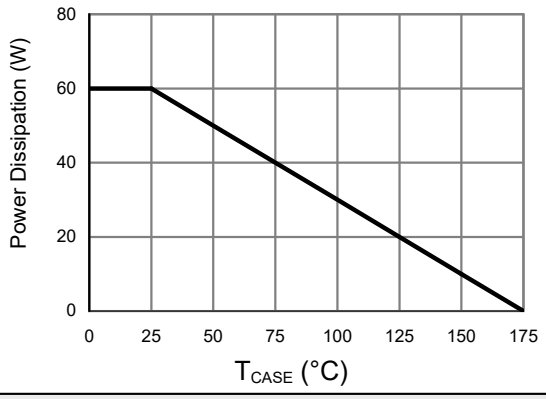

Figure 13: Power De-rating (Note F)

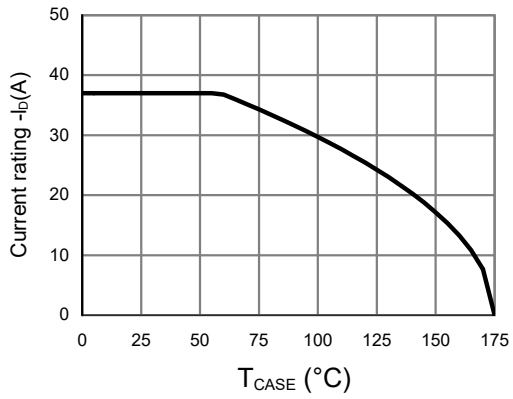

Figure 14: Current De-rating (Note F)

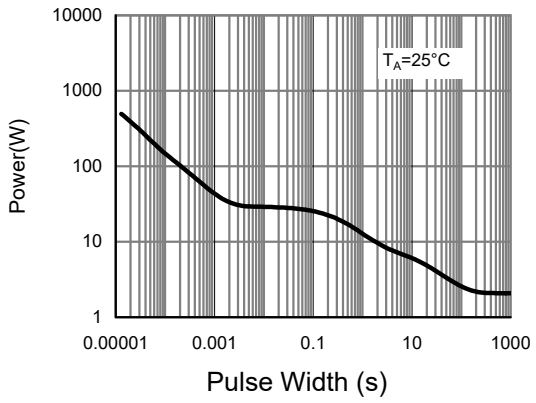

Figure 15: Single Pulse Power Rating Junction-to Ambient (Note H)

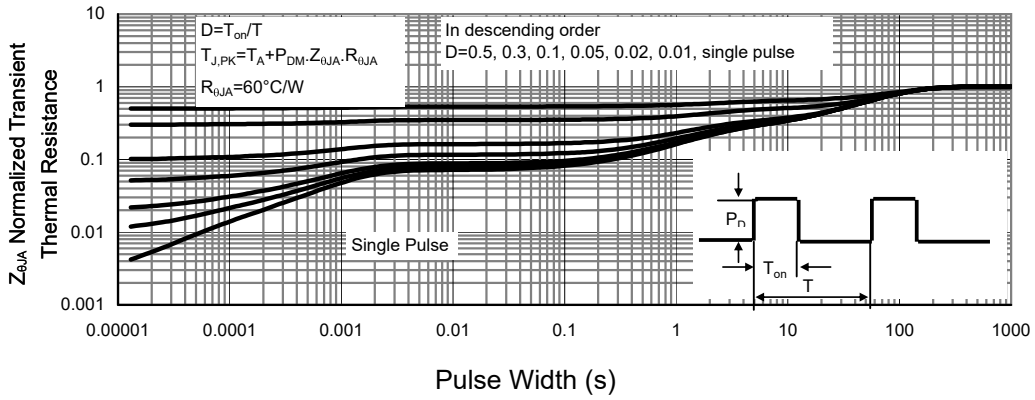

Figure 16: Normalized Maximum Transient Thermal Impedance (Note H)

7.4Typical characteristic

Gate Charge Test Circuit & Waveform

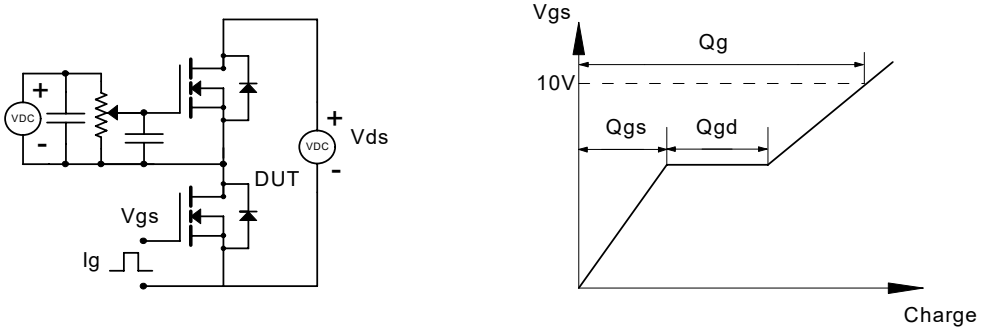

Resistive Switching Test Circuit & Waveforms

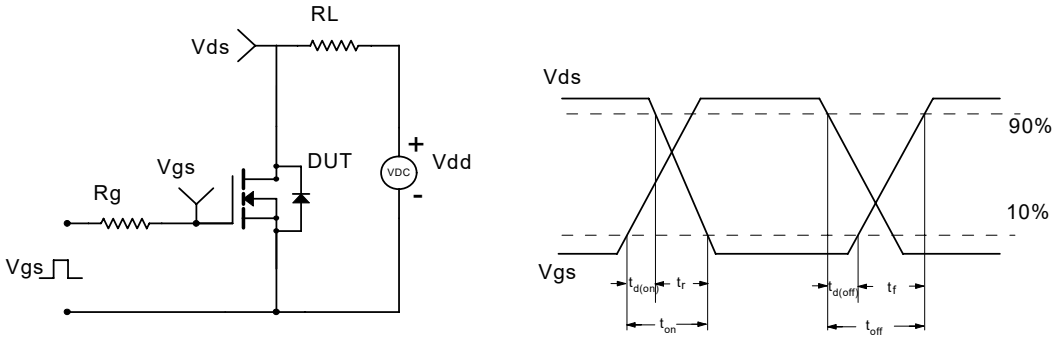

Unclamped Inductive Switching (UIS) Test Circuit & Waveforms

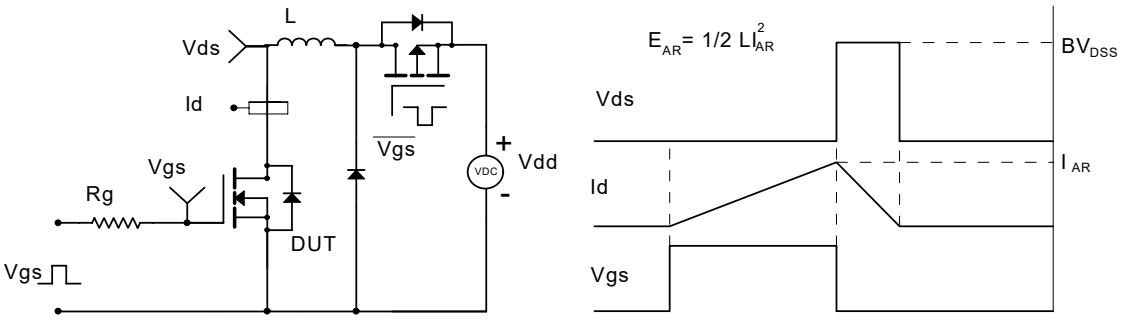

Diode Recovery Test Circuit & Waveforms

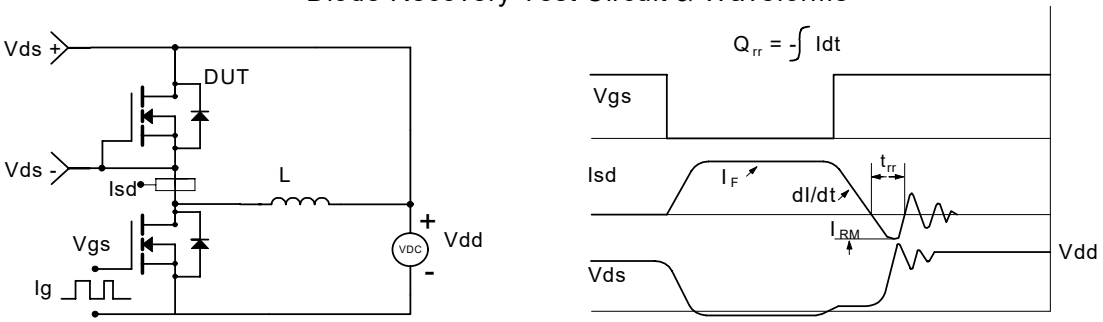

8.TO-252 Package Outline Dimensions

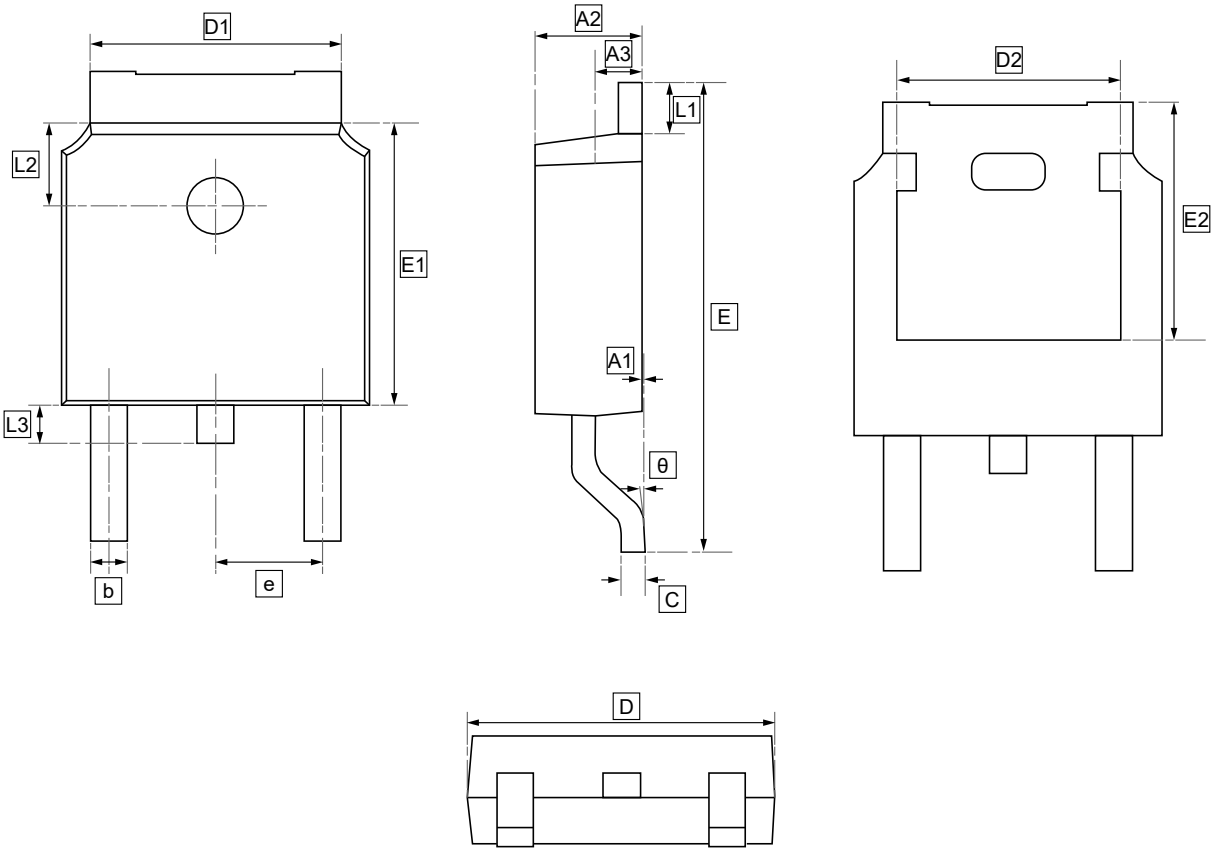

DIMENSIONS (mm are the original dimensions)

Symbol	A1	A2	A3	b	c	D	D1	D2	E	E1	E2	e	L1	L2	L3	θ
Min	0.00	2.18	0.90	0.65	0.46	6.35	4.95	4.32	9.40	5.97	5.21	2.286	0.89	1.70	0.60	0.00
Max	0.13	2.39	1.10	0.85	0.61	6.73	5.46	4.90	10.41	6.22	5.38	BSC	1.27	1.90	1.00	8.00

9.Ordering information

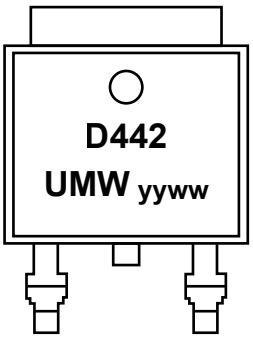

yy: Year Code
ww: Week Code

Order Code	Package	Base QTY	Delivery Mode
UMW AOD442	TO-252	2500	Tape and reel

10.Disclaimer

UMW reserves the right to make changes to all products, specifications. Customers should obtain the latest version of product documentation and verify the completeness and currency of the information before placing an order.

When applying our products, please do not exceed the maximum rated values, as this may affect the reliability of the entire system. Under certain conditions, any semiconductor product may experience faults or failures. Buyers are responsible for adhering to safety standards and implementing safety measures during system design, prototyping, and manufacturing when using our products to prevent potential failure risks that could lead to personal injury or property damage.

Unless explicitly stated in writing, UMW products are not intended for use in medical, life-saving, or life-sustaining applications, nor for any other applications where product failure could result in personal injury or death. If customers use or sell the product for such applications without explicit authorization, they assume all associated risks.

When reselling, applying, or exporting, please comply with export control laws and regulations of China, the United States, the United Kingdom, the European Union, and other relevant countries, regions, and international organizations.

This document and any actions by UMW do not grant any intellectual property rights, whether express or implied, by estoppel or otherwise. The product names and marks mentioned herein may be trademarks of their respective owners.