UMW BTA24/BTB24

1.Description

NPNPN five-layer structure of silicon bidirectional devices; with independent intellectual property rights of single-sided digging technology, table glass passivation process; multi-layer metallized electrodes on the back; with high blocking voltage and high temperature stability.

2.Features

vacuum cleaners, power tools and other motor speed controllers; solid state relays; heating controllers (temperature regulation); other phase control circuits.

3.Pinning Information

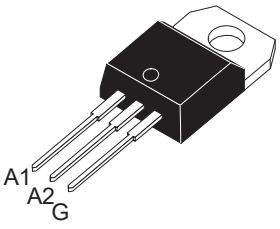

TO-220AB insulated BTA24

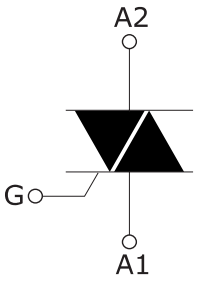

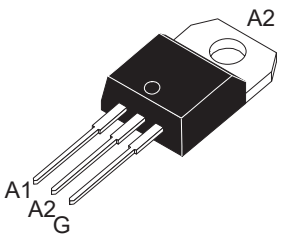

TO-220AB BTB24

4.Absolute maximum ratings (T_J=25°C unless otherwise stated)

Parameter			Symbol	Values	Units
RMSon-statecurrent(full sine wave)	BTA	T_C=80°C	$I_{T(RMS)}$	24	A
	BTB	T_C=90°C			
Non repetitive surge peakon-state current (full cycle,T_J initial=25°C)	F=50HZ, tp=20ms		I_{TSM}	240	A
I^2t value for fusing	tp=10ms		I^2t	288	A^2S
Critical rate of rise of on-state current I_G=2 x $I_{GT,}$ tr≤100ns	T_J=125		di/dt	50	A/us
Off state repetitive peak voltage Reverse repetitive peak voltage	T_J=25°C		V_{DRM}/V_{RRM}	600/800	V
Peak gate current	tp=20us	T_J=150°C	I_{GM}	4	A
Average gate power dissipation		T_J=150°C	$P_{G(AV)}$	1	W
Storage junction temperature range			T_{STG}	-40 to 150	°C
Operating junction temperature range			T_J	-40 to 125	°C

5.1 Electrical characteristics (3 quadrants)

Parameter	Quadrant	Range	Symbol	CW	BW	Units
V_D=12V R_L=33Ω	Ⅰ - Ⅱ - Ⅲ	MAX	I_{GT}(1)	35	50	mA
	Ⅰ - Ⅱ - Ⅲ	MAX	V_{GT}	1.3		V
V_D=V_{DRM}, R_L=3.3kΩ , T_J=125°C	Ⅰ - Ⅱ - Ⅲ	MIN	V_{GD}	0.2		V
I_T=500mA		MAX	I_H	50	75	mA
I_G=1.2 x I_{GT}	Ⅰ - Ⅲ	MAX	I_L	70	80	mA
	Ⅱ	MAX		80	100	mA
V_D = 67% V_{DRM} gate open	T_J=125°C	MIN	dv/dt	500	1000	V/μs
Without snubber	T_J=125°C	MIN	(dv/dt)c	13	22	A/ms

(1) minimum I_{GT} is guaranted at 5% of I_{GT} max.

5.2 Electrical characteristics (4 quadrants)

Parameter	Quadrant	Range	Symbol	value		Units
V_D=12V R_L=100Ω	Ⅰ - Ⅱ - Ⅲ Ⅳ	MAX	I_{GT}	Ⅰ Ⅱ Ⅲ	Ⅳ	mA
		MAX		≤50	≤120	mA
		MAX	V_{GT}	1.5		V
V_D=V_{DRM}, R_L=3.3kΩ , T_J=125°C		MIN	V_{GD}	0.2		V
I_T=500mA		MAX	I_H	80		mA
I_G=1.2 x I_{GT}		MAX	I_L	80		mA
		MAX		100		mA
V_D = 67% V_{DRM}, gate open,mA, T_J=125°C		MIN	dv/dt	500		V/us
Critical rise rate of commutation voltage T_J=150°C		MIN	(dv/dt)c	10		V/us

6.Static Parameters

Parameter			Symbol	Values	Units
I_{TM}=50A	T_J=25°C	MAX	V_{TM}	1.55	V
threshold on-state voltage	T_J=150°C	MAX	V_{T0}	0.87	V
Dynamic resistance	T_J=150°C	MAX	Rd	14.6	mΩ
V_{DRM}=V_{RRM}	T_J=25°C	MAX	I_{DRM}, I_{RRM}	5	uA
	T_J=150°C	MAX		1	mA
Junction to ambient	BTA	MAX	$R_{th(j-c)}$	2.05	°C/W
	BTB	MAX		1.25	°C/W

7.Static Parameters

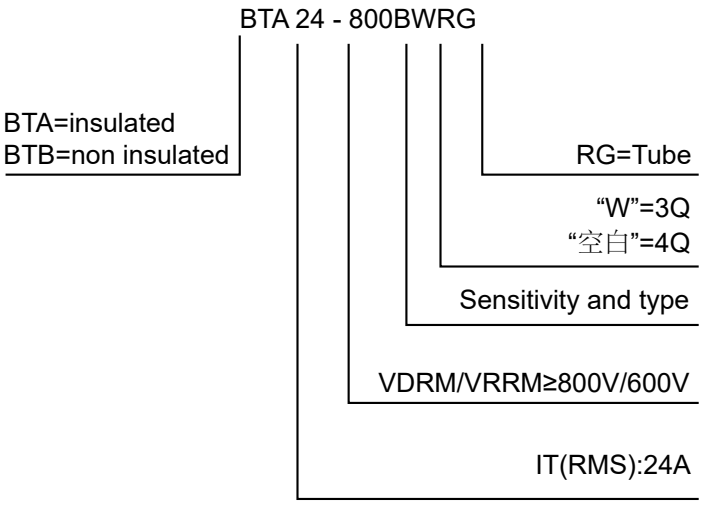

8.1 Typical Characteristic

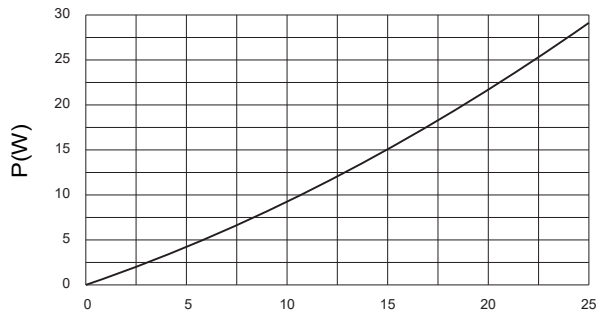

Figure 1: Maximum power dissipation versus RMS on-state current (full cycle)

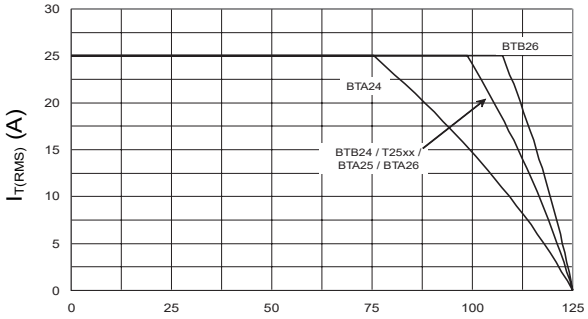

Figure 2: RMS on-state current versus case temperature (full cycle)

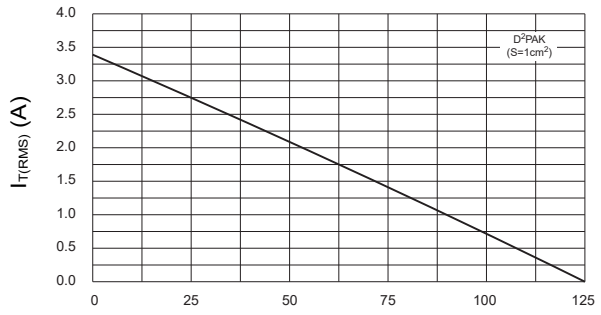

Figure 3: D^2PAK RMS on-state current versus ambient temperature (printed circuit board FR4, copper thickness: 35µm) (full cycle)

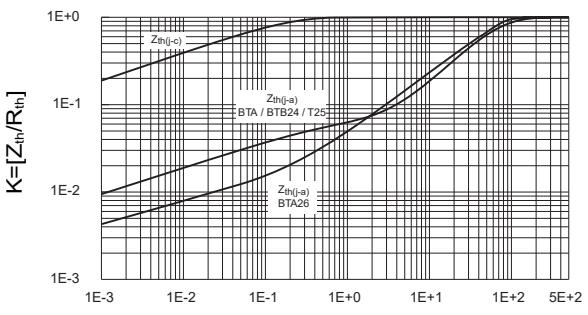

Figure 4: Relative variation of thermal impedance versus pulse duration

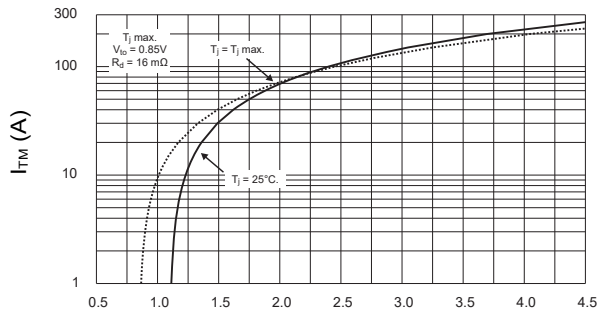

Figure 5: On-state characteristics (maximum values)

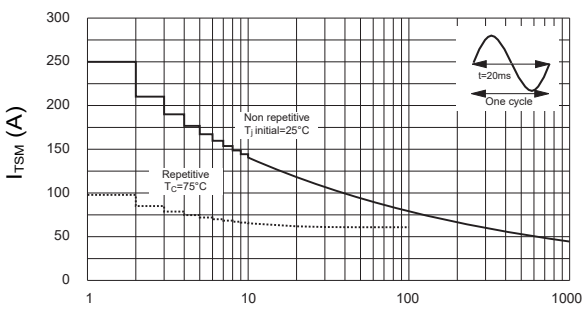

Figure 6: Surge peak on-state current versus number of cycles

8.2 Typical Characteristic

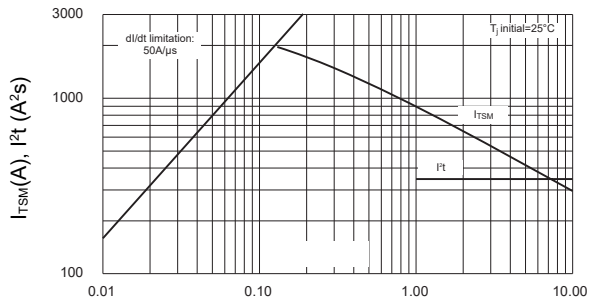

Figure 7: Non-repetitive surge peak on-state current for a sinusoidal pulse with width tp < 10 ms and corresponding value of I^2t

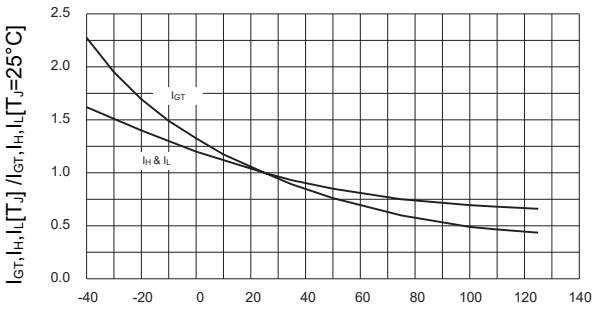

Figure 8: Relative variation of gate trigger current, holding current and latching current versus junction temperature (typical values)

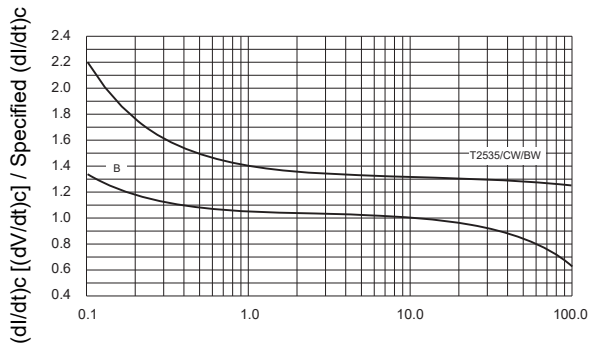

Figure 9: Relative variation of critical rate of decrease of main current versus (dV/dt)c (typical values)

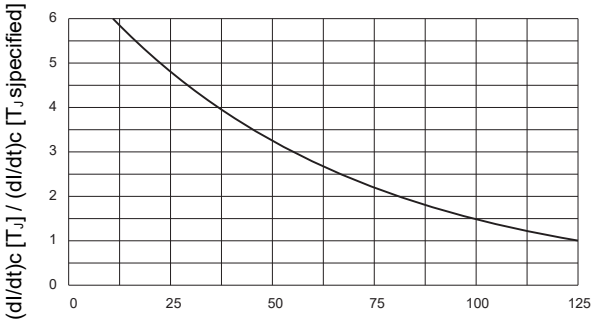

Figure 10: Relative variation of critical rate of decrease of main current versus T_J

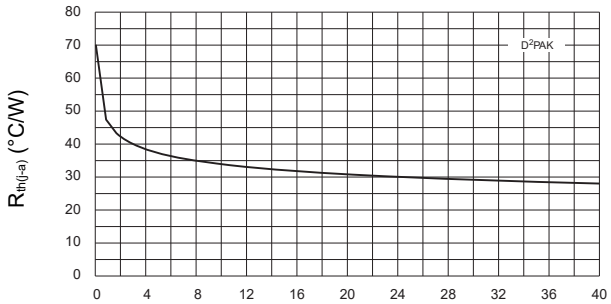

Figure 11: D^2PAK thermal resistance junction to ambient versus copper surface under tab (printed circuit board FR4, copper thickness: 35 µm)

9.1 TO-220A Package Outline Dimensions

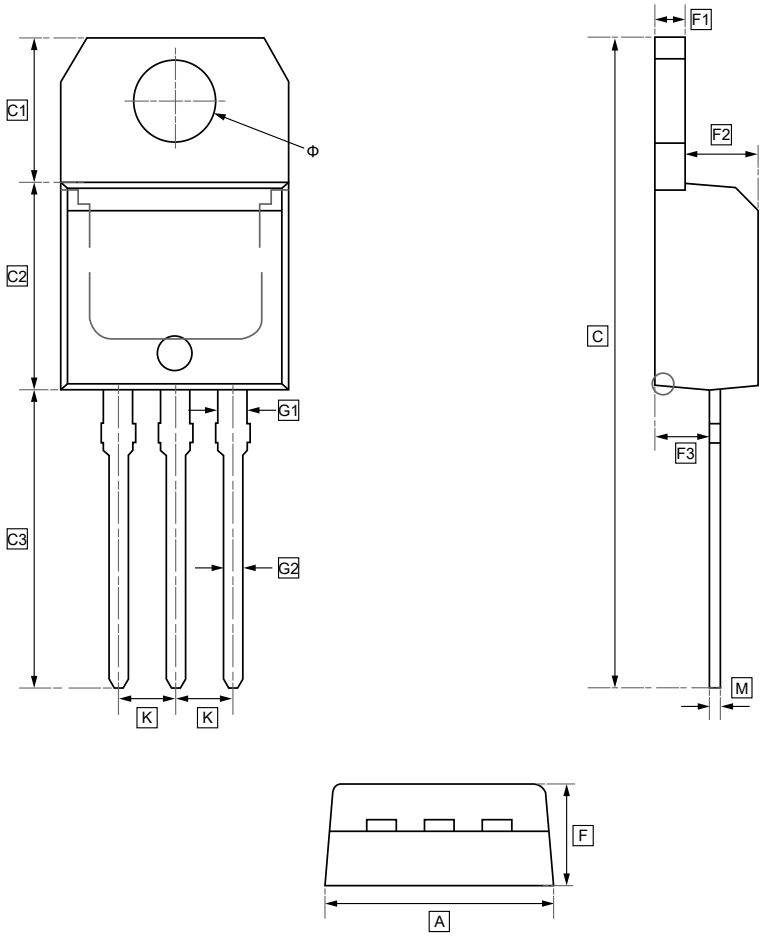

DIMENSIONS (mm are the original dimensions)

Symbol	A	C	C1	C2	C3	Φ	F	F1	F2	F3	G1	G2
Min	10.000	28.700	6.400	9.040	13.160	3.700	4.350	1.220	3.130	2.300	1.220	0.750
Max	10.200	29.100	6.500	9.240	13.460	3.800	4.650	1.320	3.330	2.700	1.320	0.850

Symbol	M	K
Min	0.450	2.540
Max	0.550	

9.2 TO-220B Package Outline Dimensions

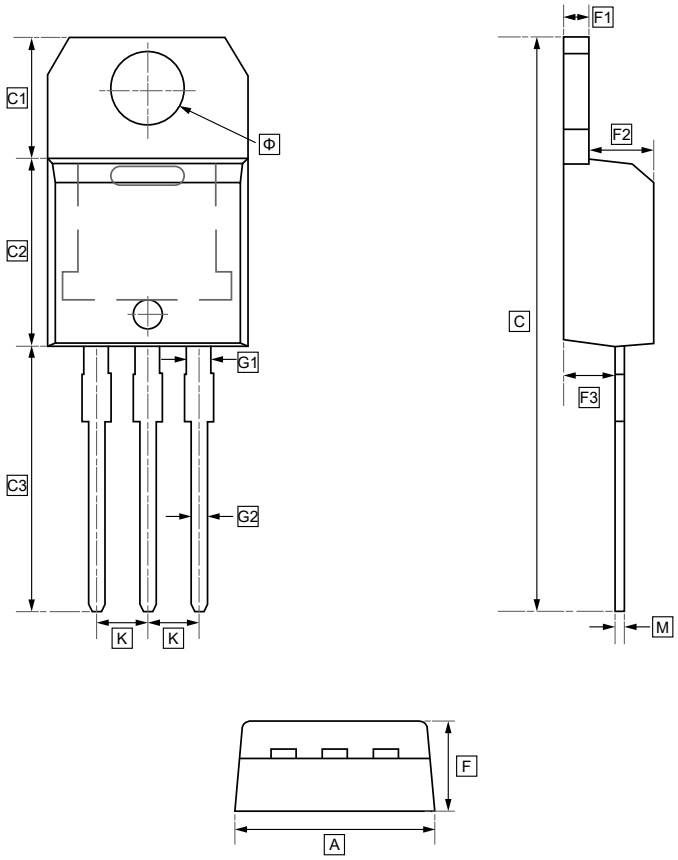

DIMENSIONS (mm are the original dimensions)

Symbol	A	C	C1	C2	C3	Φ	F	F1	F2	F3	G1	G2
Min	9.900	28.600	6.100	9.240	13.160	3.700	4.320	1.200	3.120	2.300	1.200	0.750
Max	10.100	29.000	6.200	9.440	13.460	3.800	4.620	1.300	3.320	2.700	1.300	0.850

Symbol	M	K
Min	0.400	2.540
Max	0.500	

10.Ordering Information

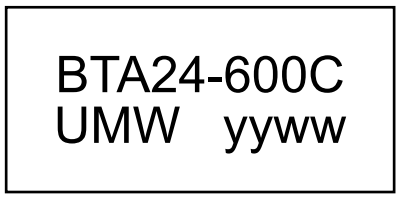

yy: Year Code
ww: Week Code

Order Code	Marking	Package	Base QTY	Delivery Mode
UMW BTA24-600BWRG	BTA24-600BW	TO-220A	1000	Tube and box
UMW BTA24-600CRG	BTA24-600C	TO-220A	1000	Tube and box
UMW BTA24-600BRG	BTA24-600B	TO-220A	1000	Tube and box
UMW BTA24-600CWRG	BTA24-600CW	TO-220A	1000	Tube and box
UMW BTB24-600BRG	BTB24-600B	TO-220B	1000	Tube and box
UMW BTB24-600BWRG	BTB24-600BW	TO-220B	1000	Tube and box
UMW BTB24-600CWRG	BTB24-600CW	TO-220B	1000	Tube and box
UMW BTA24-800BRG	BTA24-800B	TO-220A	1000	Tube and box
UMW BTA24-800BWRG	BTA24-800BW	TO-220A	1000	Tube and box
UMW BTA24-800CRG	BTA24-800C	TO-220A	1000	Tube and box
UMW BTA24-800CWRG	BTA24-800CW	TO-220B	1000	Tube and box
UMW BTB24-800BRG	BTB24-800B	TO-220B	1000	Tube and box
UMW BTB24-800BWRG	BTB24-800BW	TO-220B	1000	Tube and box
UMW BTB24-800CWRG	BTB24-800CW	TO-220B	1000	Tube and box

11.Disclaimer

UMW reserves the right to make changes to all products, specifications. Customers should obtain the latest version of product documentation and verify the completeness and currency of the information before placing an order.

When applying our products, please do not exceed the maximum rated values, as this may affect the reliability of the entire system. Under certain conditions, any semiconductor product may experience faults or failures. Buyers are responsible for adhering to safety standards and implementing safety measures during system design, prototyping, and manufacturing when using our products to prevent potential failure risks that could lead to personal injury or property damage.

Unless explicitly stated in writing, UMW products are not intended for use in medical, life-saving, or life-sustaining applications, nor for any other applications where product failure could result in personal injury or death. If customers use or sell the product for such applications without explicit authorization, they assume all associated risks.

When reselling, applying, or exporting, please comply with export control laws and regulations of China, the United States, the United Kingdom, the European Union, and other relevant countries, regions, and international organizations.

This document and any actions by UMW do not grant any intellectual property rights, whether express or implied, by estoppel or otherwise. The product names and marks mentioned herein may be trademarks of their respective owners.