UMW D5V0L1B2WS-7

1.Features

- Provides ESD Protection per IEC 61000-4-2
  Standard:Air – ±30kV, Contact – ±30kV
- 1 Channel of ESD Protection
- Low Channel Input Capacitance
- Typically Used in Cellular Handsets, Portable Electronics,Communication Systems, Computers and Peripherals

2.Pinning information

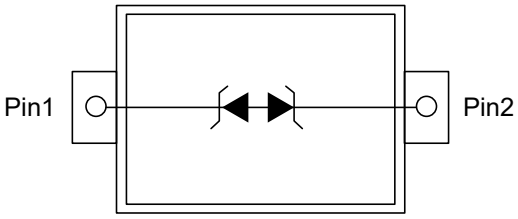

SOD-323

3.Maximum Ratings

Parameter	Symbol	Conditions	Value	Units
Peak Pulse Power Dissipation	P_{PP}	8/20μs, Per Fig. 1	84	W
Peak Pulse Current	I_{PP}	8/20μs, Per Fig. 1	6	A
ESD Protection – Contact Discharge	$V_{ESD_Contact}$	Standard IEC 61000-4-2	±30	kV
ESD Protection – Air Discharge	V_{ESD_Air}	Standard IEC 61000-4-2	±30	kV

4.Thermal Characteristics

Parameter	Symbol	Value	Units
Package Power Dissipation	P_D	200	mW
Thermal Resistance, Junction to Ambient	$R_{\theta JA}$	625	°C/W
Storage Temperature Range	T_J, T_{STG}	-65 to 150	°C

5.Electrical Characteristic (T_A=25°C unless otherwise noted)

Parameter	Symbol	Conditions	Min	Typ	Max	Units
Reverse Standoff Voltage	V_{RWM}				5	V
Channel Leakage Current	I_R	V_{RWM}=5V		10	100	nA
Clamping Voltage, Positive Transients	V_{CL}	I_{PP}=1A, t_p=8/20μs		7	9	V
		I_{PP}=3A, t_p=8/20μs		8.7	10.7	V
		I_{PP}=5A, t_p=8/20μs		10.5	12	V
		I_{PP}=6A, t_p=8/20μs		11.5	14	V
Breakdown Voltage	V_{BR}	I_R=1mA	6	7	8	V
Differential Resistance	R_{DIF}	I_R=1A, t_p=8/20μs		0.2		Ω
Channel Input Capacitance	C_T	V_R=0V, f=1MHz		15	20	pF

6.Typical characteristic

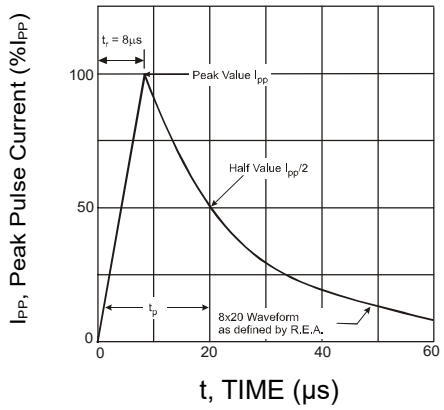

Figure 1: Pulse Waveform

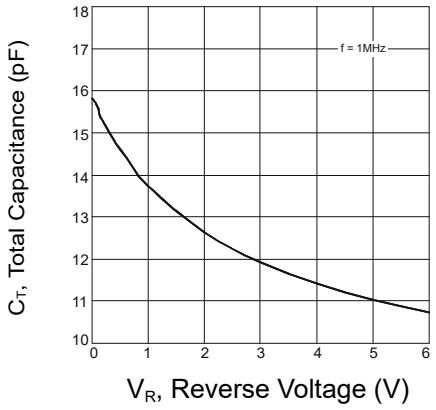

Figure 2: Typical Total Capacitance vs. Reverse Voltage

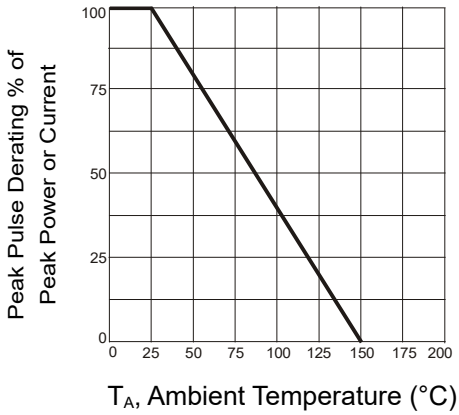

Figure 3: Pulse Derating Curve

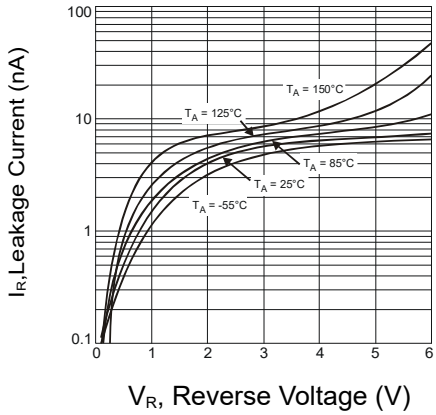

Figure 4: Typical Reverse Characteristics

7.SOD-323 Package Outline Dimensions

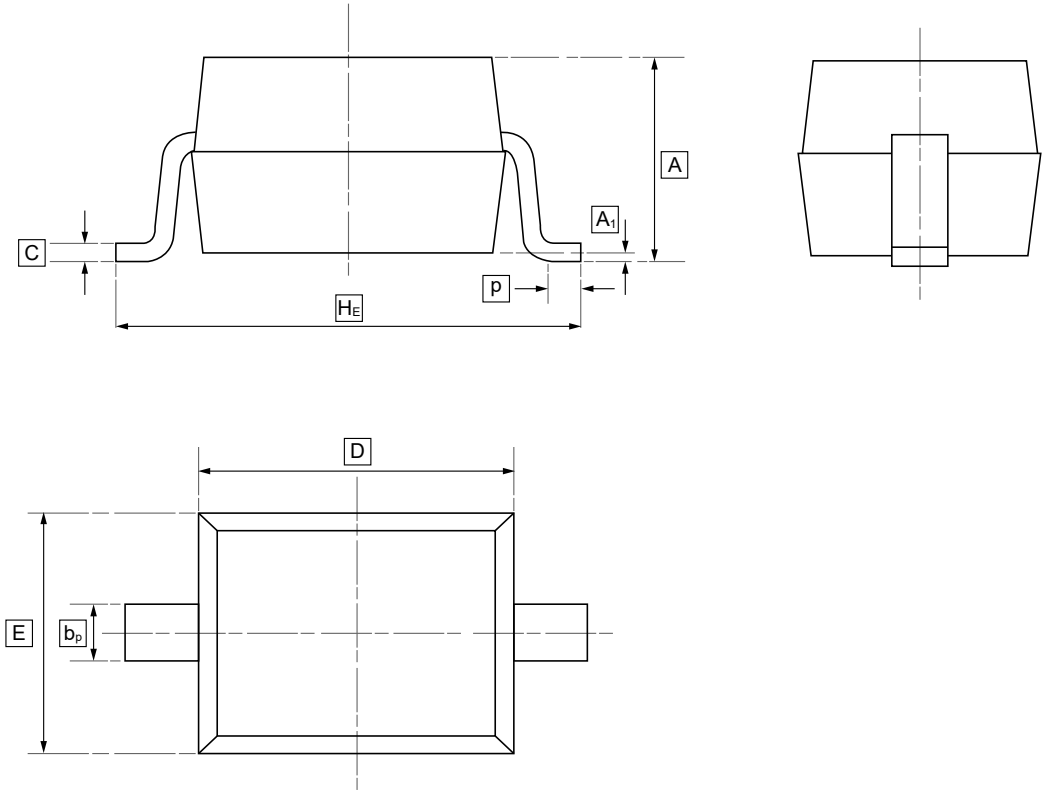

DIMENSIONS (mm are the original dimensions)

Symbol	A	b_p	C	D	E	H_E	A_1	p
Min	0.80	0.25	0.10	1.50	1.15	2.30	0.01	0.20
Max	1.20	0.40	0.15	1.80	1.35	2.80	0.10	0.50

8.Ordering information



ww: Batch Code

Order Code	Package	Base QTY	Delivery Mode
UMW D5V0L1B2WS-7	SOD-323	3000	Tape and reel



9.Disclaimer

UMW reserves the right to make changes to all products, specifications. Customers should obtain the latest version of product documentation and verify the completeness and currency of the information before placing an order.

When applying our products, please do not exceed the maximum rated values, as this may affect the reliability of the entire system. Under certain conditions, any semiconductor product may experience faults or failures. Buyers are responsible for adhering to safety standards and implementing safety measures during system design, prototyping, and manufacturing when using our products to prevent potential failure risks that could lead to personal injury or property damage.

Unless explicitly stated in writing, UMW products are not intended for use in medical, life-saving, or life-sustaining applications, nor for any other applications where product failure could result in personal injury or death. If customers use or sell the product for such applications without explicit authorization, they assume all associated risks.

When reselling, applying, or exporting, please comply with export control laws and regulations of China, the United States, the United Kingdom, the European Union, and other relevant countries, regions, and international organizations.

This document and any actions by UMW do not grant any intellectual property rights, whether express or implied, by estoppel or otherwise. The product names and marks mentioned herein may be trademarks of their respective owners.