UMW ESD3Z5V0C

1.Features

- 300 Watts peak pulse power (t_p=8/20μs)
- Transient protection for data lines to IEC 61000-4-2 (ESD) ±15kV (air), ±8kV
- IEC 61000-4-4 (EFT) 40A (5/50ns)
- IEC 61000-4-5 (Lightning) 24A (8/20 μs)
- Small package for use in portable electronics
- Suitable replacement for MLV's in ESD protection applications
- Small Body Outline Dimensions
- Protects one I/O or power line
- Low clamping voltage
- Working voltages: 5V and 36V
- Low leakage current
- Solid-state silicon-avalanche technology
- We declare that the material of product compliance with RoHS requirements

2.Pinning information

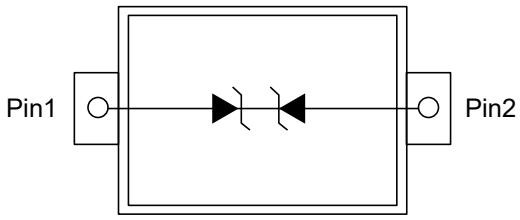

SOD-323

3.Absolute Maximum Ratings T_A= 25°C

Parameter	Symbol	Maximum	Units
Peak Pulse Power (t_p=8/20μs)	P_{PP}	300	W
Maximum lead temperature for soldering during 10s	T_L	260	°C
Storage Temperature Range	T_{STG}	-55 to 155	°C
Junction Temperature	T_{OP}	-40 to 125	°C
Maximum junction temperature	T_J	150	°C
IEC61000-4-2 (ESD) air discharge		±15	kV
IEC61000-4-2 (ESD) contact discharge		±8	kV
IEC61000-4-4(EFT)		40	A
ESD Voltage Per Human Body Model		16	kV

4.Electrical Characteristic (T_A=25°C unless otherwise noted)

Device	Device Marking	VRWM (V)	I_R(uA) V_{RWM}	V_{BR}(V) I_T(Note1)	I_T	V_C(V) I_{PP}=5A*	V_C(V) Max=I_{PP}*	I_{PP} (A)*	P_{PK} (W)*	C (pF)
		Max	Max	Min	mA	Typ	Max	Max	Max	Typ
ESD3Z5V0C	3M	5	1	5.6	1	11.6	18.6	9.4	174	35

Notes:

*Surge current waveform per Figure 1.

1. VBR is measured with a pluse test current IT at an ambient temperature of 25°C.

5.Electrical Parameters (T_A=25°C unless otherwise noted)

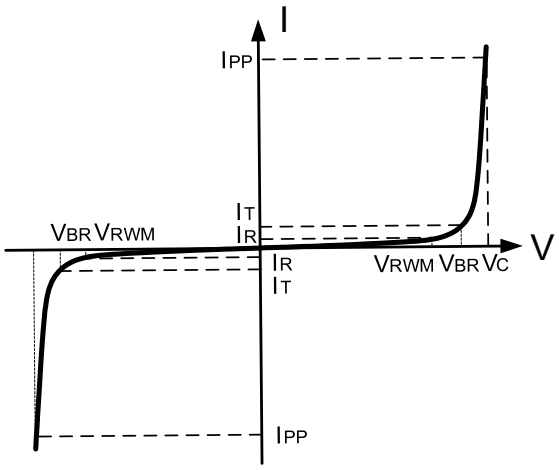

Symbol	Parameter
I_{PP}	Maximum Reverse Peak Pulse Current
V_C	Clamping Voltage @ I_{PP}
V_{RWM}	Working Peak Reverse Voltage
I_R	Maximum Reverse Leakage Current @ V_{RWM}
I_T	Test Current
V_{BR}	Breakdown Voltage @ I_T

6.Typical characteristic

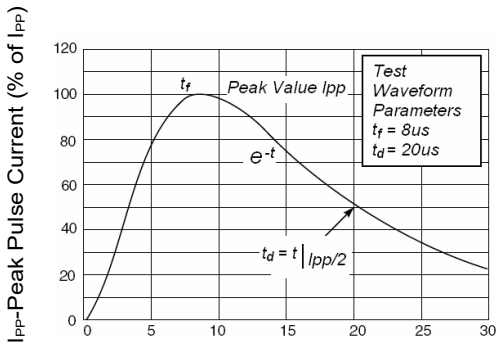

Figure 1: Pulse Waveform

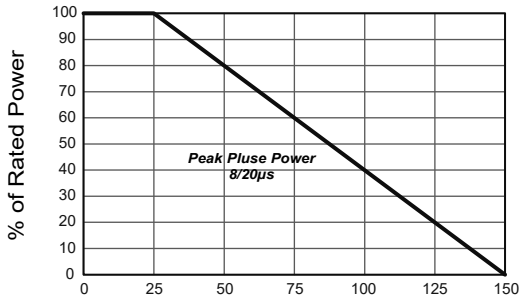

Figure 2: Power Derating

7.SOD-323 Package Outline Dimensions

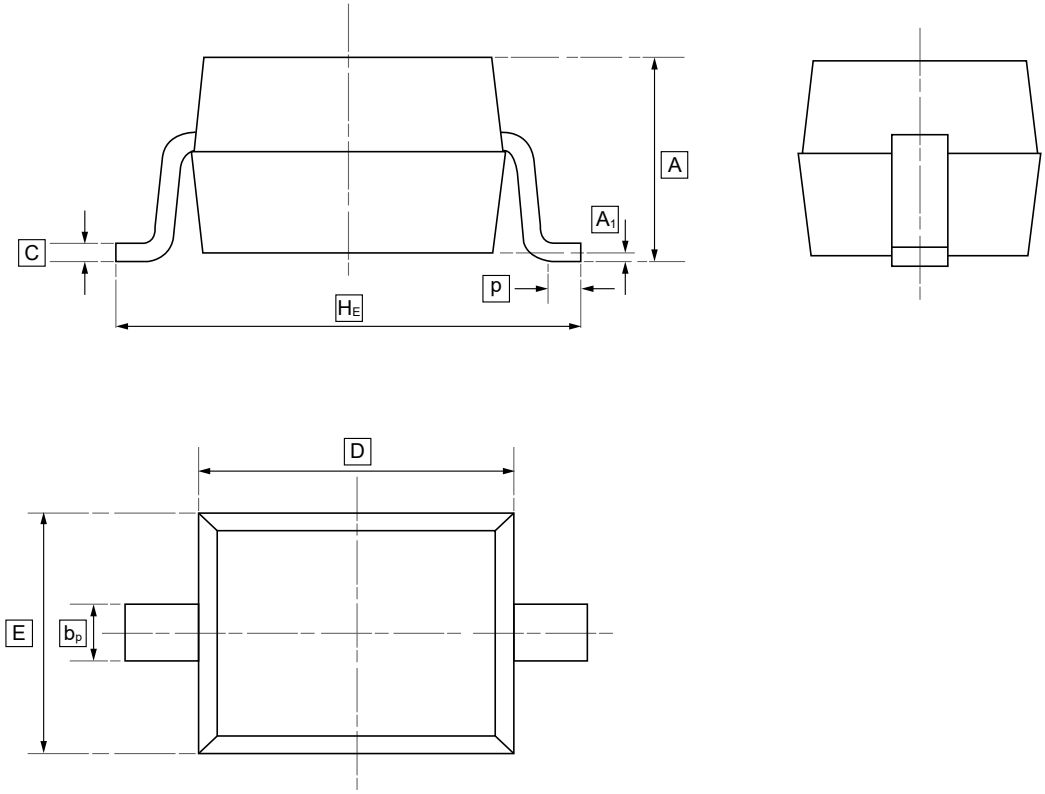

DIMENSIONS (mm are the original dimensions)

Symbol	A	b_p	C	D	E	H_E	A_1	p
Min	0.80	0.25	0.10	1.50	1.15	2.30	0.01	0.20
Max	1.20	0.40	0.15	1.80	1.35	2.80	0.10	0.50

8.Ordering information



ww: Batch Code

Order Code	Package	Base QTY	Delivery Mode
UMW ESD3Z5V0C	SOD-323	3000	Tape and reel

9.Disclaimer

UMW reserves the right to make changes to all products, specifications. Customers should obtain the latest version of product documentation and verify the completeness and currency of the information before placing an order.

When applying our products, please do not exceed the maximum rated values, as this may affect the reliability of the entire system. Under certain conditions, any semiconductor product may experience faults or failures. Buyers are responsible for adhering to safety standards and implementing safety measures during system design, prototyping, and manufacturing when using our products to prevent potential failure risks that could lead to personal injury or property damage.

Unless explicitly stated in writing, UMW products are not intended for use in medical, life-saving, or life-sustaining applications, nor for any other applications where product failure could result in personal injury or death. If customers use or sell the product for such applications without explicit authorization, they assume all associated risks.

When reselling, applying, or exporting, please comply with export control laws and regulations of China, the United States, the United Kingdom, the European Union, and other relevant countries, regions, and international organizations.

This document and any actions by UMW do not grant any intellectual property rights, whether express or implied, by estoppel or otherwise. The product names and marks mentioned herein may be trademarks of their respective owners.