1.Description

The UMW FAN3111 2A gate driver is designed to drive an N-channel enhancement-mode MOSFET in low-side switching applications. UMW FAN3111 has dual CMOS inputs with thresholds referenced to VDD for use with PWM controllers and other input-signal sources that operate from the same supply voltage as the driver.

2.Applications

- Switch-Mode Power Supplies
- Synchronous Rectifier Circuits
- Pulse Transformer Driver
- Logic to Power Buffer
- Motor Control

3.Features

- Dual inputs allow configuration as non-inverting or inverting with enable function
- CMOS logic inputs
- Input logic protection as low as -10V
- 4.5 to 25-V Single-Supply Range
- 2-A Peak Source and Sink-Drive Curren
- Internal resistance turns off driver when there is no input
- Operating Temperature Range of -40 to 125°C
- Turn on/Turn off Delays:
  -- Ton/Toff =20ns/20ns

4.Pin Configuration

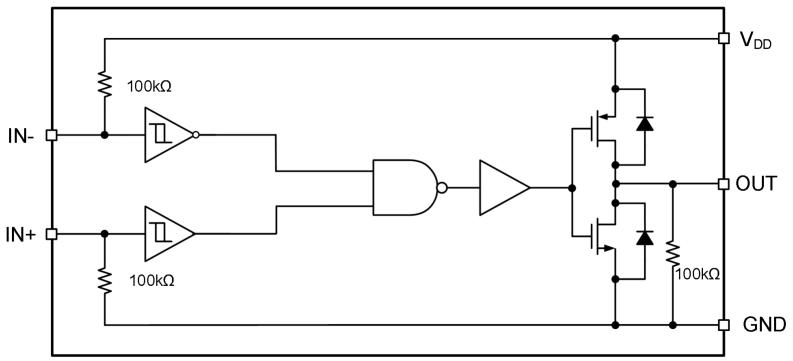

5.Pinning Information

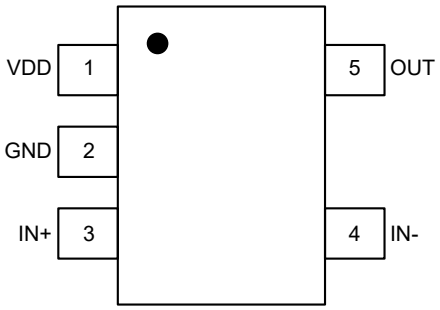

SOT23-5

Lead Definitions

Number	Symbol	Description
1	VDD	Bias supply input
2	GND	Ground: All signals are referenced to this pin
3	IN+	Non-inverting Input
4	IN-	Inverting Input
5	OUT	Gate driven Ouput

6.Absolute Maximum Ratings

Exceeding the limit maximum rating may cause permanent damage to the device. All voltage parameters are rated with reference to V_{SS} and an ambient temperature of 25°C.

Parameter		Symbol	Min	Max	Units
Supply voltage range		V_{DD}	-0.3	25	V
OUT voltage range		V_O	-0.3	V_{DD}+0.3	V
IN+, IN- voltage		V_{IN}	-12	25	V
Voltage on IN to GND	FAN3111E		-0.3	V_{XREF}+0.3	V
Voltage on XREF to GND	FAN3111E	V_{XREF}	-0.3	5.5	V

7.ESD Rating

Parameter	Symbol	Min	Max	Units
Human body model (HBM)	ESD	-	2000	V
Charged device model (CDM)		-	500	V

8.Rated Power

Parameter	Symbol	Min	Max	Units
SOIC package power（T_A ≤70°C）	PD	-	470	mW

9.Thermal Information

Parameter	Symbol	Min	Max	Units
Storage Temperature	T_S	-65	150	°C
Operating Junction Temperature	T_J	-	150	°C

10.Recommended Operating Conditions

To properly operate, device should be used in the following recommended conditions. All voltages are with respect to GND unless otherwise noted, Currents are positive into, negative out of the specified terminal, environment temperature is 25°C.

Parameter		Symbol	Min	Max	Units
Supply voltage range		V_{DD}	4.5	25	V
OUT voltage range		V_O	0	V_{DD}	V
IN+, IN- voltage		V_{IN}	-10	25	V
Ambient temperature		T_A	-40	125	°C
Input Voltage IN	FAN3111E	V_{IN}	0	V_{XREF}	V
External Reference Voltage XREF	FAN3111E	V_{XREF}	2	5	V

11.Electrical Characteristics

T_A= 25°C, V_{DD}=15V(unless otherwise noted).

Definition	Symbol	Min	Typ	Max	Units
Input signal high threshold	V_{IH}	0.7*V_{CC}	7.5		V
Input signal low threshold	V_{IL}			0.3*V_{CC}	V
Input current(IN+=15V, IN-=0V)	I_{IN+}		150	300	μA
Input current(IN+=0V,IN-=15V)	I_{IN-}			1	μA
High output voltage	V_{OH}	V_{DD}-0.025			V
Low output voltage	V_{OL}			0.025	V
Output high short-circuit pulse current	I_{O+}		2		A
Output low short-circuit pulse current	I_{O-}		2		A
Rise time(C_L=1nF)	t_R			15	ns
Fall time(C_L=1nF)	t_F			15	ns
Turn-on propagation delay(C_L=1nF)	t_{ON}			30	ns
Turn-off propagation delay(C_L=1nF)	t_{OFF}			30	ns
V_{CC} supply current(V_{IN-}=HIGH V_{IN+}=LOW)	I_{Q1}			30	μA
V_{CC} supply current(V_{IN-}=LOW V_{IN+}=HIGH)	I_{Q2}		300	500	μA

12.Function Description

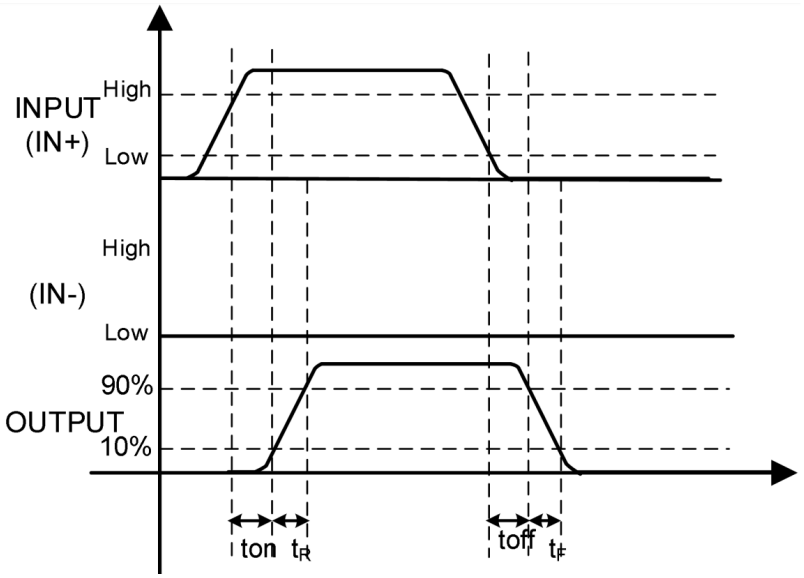

Figure 1. Input-Output waveform(non-inverting)

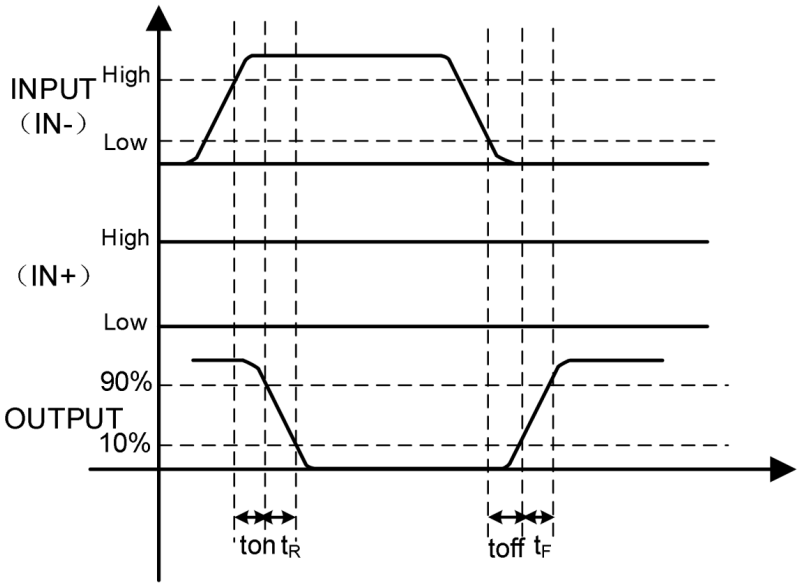

Figure 2. Input-Output waveform(inverting)

13.Function Block Diagram

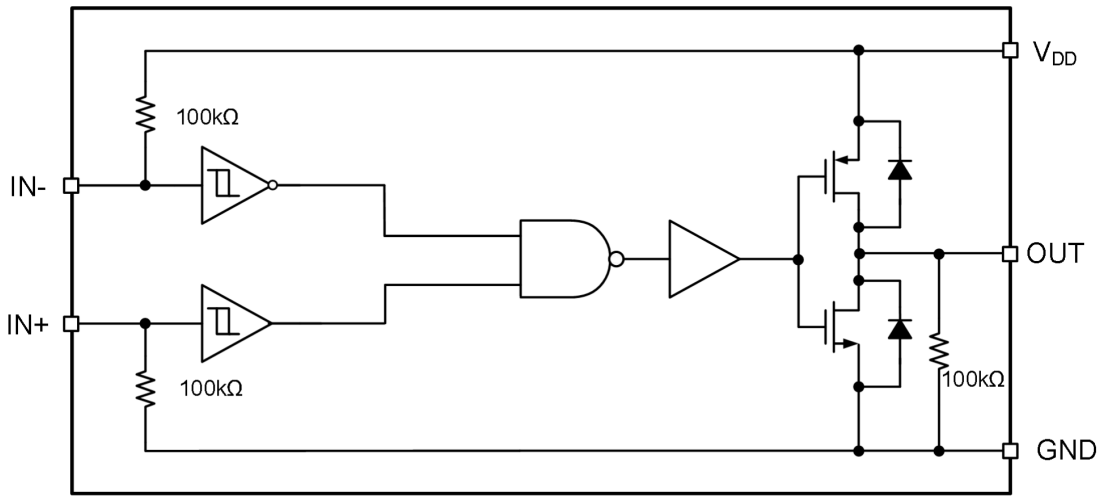

Figure 3. Function Block Diagram of FAN3111

14.Application Message

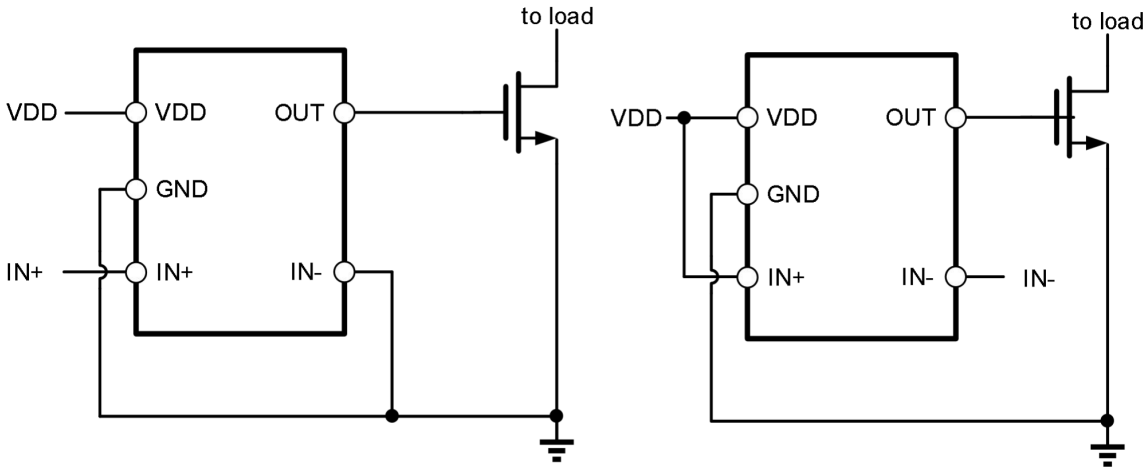

Figure 4. Typical application circuit of FAN3111

15.SOT23-5 Package Outline Dimensions

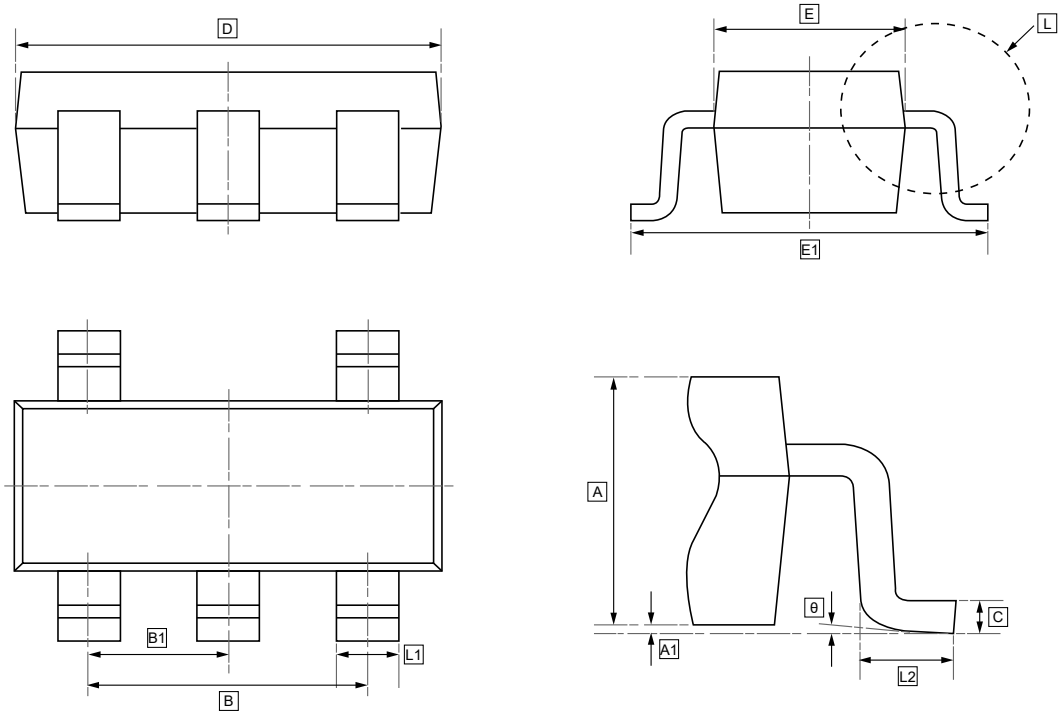

DIMENSIONS (mm are the original dimensions)

Symbol	A	A1	B	B1	C	D	E	E1	L1	L2	θ
Min	1.050	0.000	1.800	0.950	0.100	2.820	1.500	2.650	0.300	0.300	0°
Max	1.150	0.100	2.000	TYP	0.200	3.020	1.700	2.950	0.500	0.600	8°

16.Ordering information

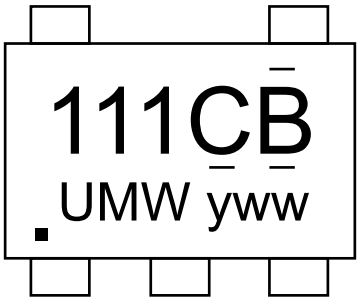

yww: Batch Code

Order Code	Marking	Package	Base QTY	Delivery Mode
UMW FAN3111CSX	111CB	SOT23-5	3000	Tape and reel
UMW FAN3111ESX	111EA	SOT23-5	3000	Tape and reel

17.Disclaimer

UMW reserves the right to make changes to all products, specifications. Customers should obtain the latest version of product documentation and verify the completeness and currency of the information before placing an order.

When applying our products, please do not exceed the maximum rated values, as this may affect the reliability of the entire system. Under certain conditions, any semiconductor product may experience faults or failures. Buyers are responsible for adhering to safety standards and implementing safety measures during system design, prototyping, and manufacturing when using our products to prevent potential failure risks that could lead to personal injury or property damage.

Unless explicitly stated in writing, UMW products are not intended for use in medical, life-saving, or life-sustaining applications, nor for any other applications where product failure could result in personal injury or death. If customers use or sell the product for such applications without explicit authorization, they assume all associated risks.

When reselling, applying, or exporting, please comply with export control laws and regulations of China, the United States, the United Kingdom, the European Union, and other relevant countries, regions, and international organizations.

This document and any actions by UMW do not grant any intellectual property rights, whether express or implied, by estoppel or otherwise. The product names and marks mentioned herein may be trademarks of their respective owners.