UMW FDD8874

30V N-Channel MOSFET

1.Description

This N-Channel MOSFET has been designed specifically to improve the overall efficiency of DC/DC converters using either synchronous or conventional switching PWM controllers. It has been optimized for low gate charge, low $R_{DS(ON)}$ and fast switching speed.

2.Features

- $V_{DS(V)}$=30V
- I_D=116A
- $R_{DS(ON)}$<5.1mΩ(V_{GS}=10V)
- $R_{DS(ON)}$<6.4mΩ(V_{GS}=4.5V)
- Low gate resistance
- RoHS Compliant
- High power and current handling capability
- High performance trench technology for extremely low $R_{DS(ON)}$

3.Pinning information

Pin	Symbol	Description
1	G	GATE
2	D	DRAIN
3	S	SOURCE

TO-252(DPAK) top view

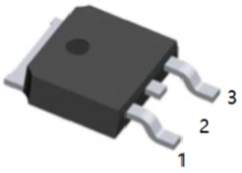

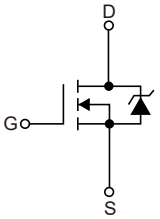

4.Absolute Maximum Ratings T_C= 25°C

Parameter	Symbol	Rating	Units
Drain to Source Voltage	V_{DSS}	30	V
Gate to Source Voltage	V_{GS}	±20	V
Drain Current Continuous (T_C=25°C, V_{GS}=10V) (Note 1)	I_D	116	A
Continuous (T_C=25°C, V_{GS}=4.5V) (Note 1)		103	A
Continuous (T_{amb}=25°C, V_{GS}=10V, with $R_{\theta JA}$=52°C/W)		18	A
Pulsed		Figure 4	A
Single Pulse Avalanche Energy (Note 2)	E_{AS}	240	mJ
Power Dissipation	P_D	110	W
Derate above 25°C		0.73	°C/W
Storage Temperature	T_J, T_{STG}	-55 to 175	°C

5.Thermal Characteristics

Parameter	Symbol	Rating	Units
Thermal Resistance, Junction-to-Case TO-252,TO-251	$R_{\theta JC}$	1.36	°C/W
Thermal Resistance, Junction-to-Ambient TO-252,TO-251	$R_{\theta JA}$	100	°C/W
Thermal Resistance, Junction-to-Ambient TO-252,1in^2 copper pad area	$R_{\theta JA}$	52	°C/W

6.Electrical Characteristic (T_C=25°C unless otherwise noted)

Parameter	Symbol	Conditions	Min	Typ	Max	Units
Off Characteristics						
Drain to Source Breakdown Voltage	BV_{DSS}	I_D=250μA, V_{GS}=0V	30			V
Zero Gate Voltage Drain Current	I_{DSS}	V_{DS}=24V, V_{GS}=0V			1	μA
		V_{DS}=24V, V_{GS}=0V, T_J=150°C			250	μA
Gate to Source Leakage Current	I_{GSS}	V_{GS}=±20V			±100	nA
On Characteristics						
Gate to Source Threshold Voltage	$V_{GS(th)}$	V_{DS}=V_{GS}, I_D=250μA	1.2		2.5	V
Drain to Source On Resistance	$R_{DS(ON)}$	I_D=35A, V_{GS}=10V		4.2	5.1	mΩ
		I_D=35A, V_{GS}=4.5V		5.2	6.4	mΩ
Dynamic Characteristics						
Input Capacitance	C_{iss}	V_{DS}=15V, V_{GS}=0V, f=1MHz		2990		pF
Output Capacitance	C_{oss}			585		pF
Reverse Transfer Capacitance	C_{rss}			340		pF
Gate Resistance	R_g	V_{GS}=0.5V, f=1MHz		2		Ω
Total Gate Charge at 10V	$Q_{g(TOT)}$	V_{GS}=0V to 10V, V_{DD}=15V, I_D=35A, I_g=1mA		54	72	nC
Total Gate Charge at 5V	$Q_{g(5)}$	V_{GS}=0V to 5V, V_{DD}=15V, I_D=35A, I_g=1mA		29	38	nC
Threshold Gate Charge	$Q_{g(TH)}$	V_{GS}=0V to 1V, V_{DD}=15V, I_D=35A, I_g=1mA		3	4	nC
Gate to Source Gate Charge	Q_{gs}			8		nC
Gate Charge Threshold to Plateau	Q_{gs2}			5		nC
Gate to Drain “Miller” Charge	Q_{gd}			10		nC
Turn-On Time	$t_{(on)}$	V_{DD}=15V, I_D=35A, V_{GS}=10V, R_{GS}=4.7Ω			156	ns
Turn-On Delay Time	$t_{D(on)}$			9		ns
Rise Time	t_r			96		ns
Turn-Off DelayTime	$t_{D(off)}$			47		ns
Fall Time	t_f			37		ns
Turn-Off Time	t_{off}				126	ns

Drain–Source Diode Characteristics						
Source to Drain Diode Forward Voltage	V_{SD}	I_{SD}=35A			1.25	V
		I_{SD}=15A			1	V
Reverse Recovery Time	t_{rr}	I_F=35A, di/dt=100A/μs			32	ns
Reverse Recovery Charge	Q_{rr}	I_F=35A, di/dt=100A/μs			18	nC

Notes:

1: Package current limitation is 35A.

2: Starting T_J=25°C, L=0.61mH, I_{AS}=28A, V_{DD}=27V, V_{GS}=10V.

7.1Typical characteristic

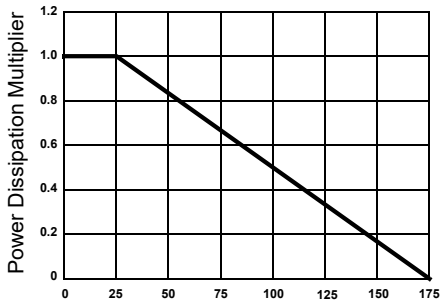

Figure 1: Normalized Power Dissipation vs Case Temperature

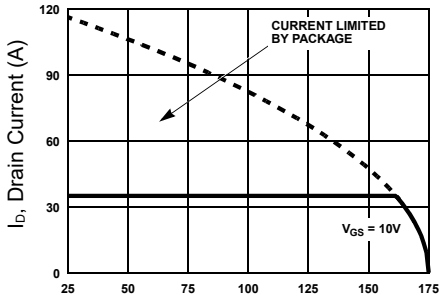

Figure 2: Maximum Continuous Drain Current vs Case Temperature



Figure 3: Normalized Maximum Transient Thermal Impedance

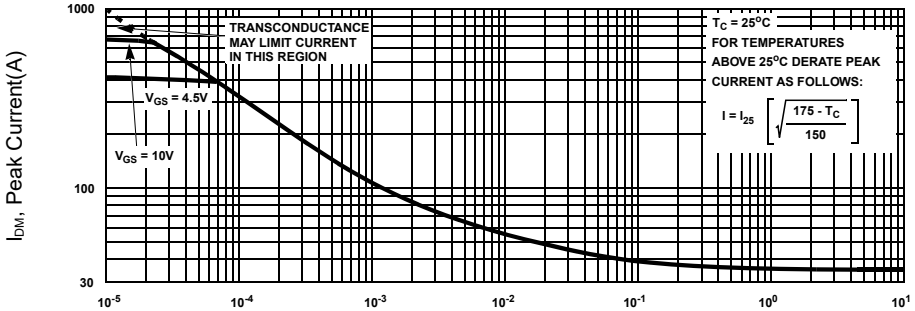

Figure 4: Peak Current Capability

7.2Typical characteristic

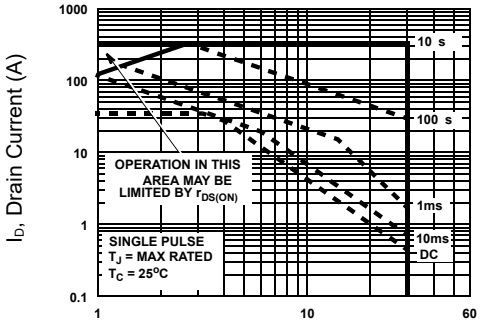

Figure 5: Forward Bias Safe Operating Area

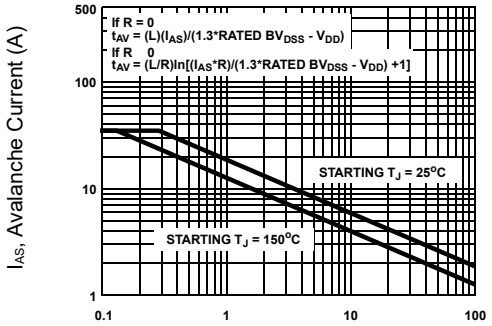

Figure 6: Unclamped Inductive Switching Capability

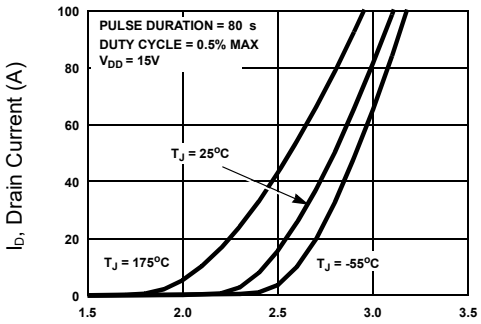

Figure 7: Transfer Characteristics

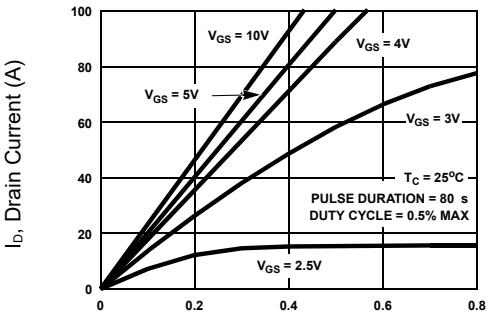

Figure 8: Saturation Characteristics

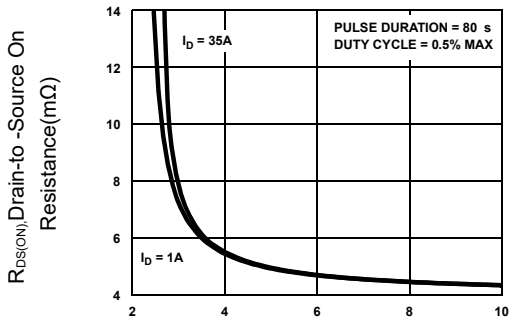

Figure 9: Drain to Source On Resistance vs Gate Voltage and Drain Current

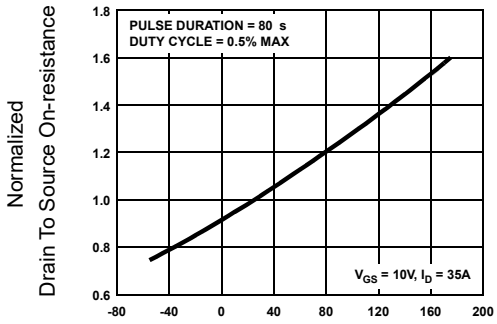

Figure 10: Normalized Drain to Source On Resistance vs Junction Temperature

7.3Typical characteristic

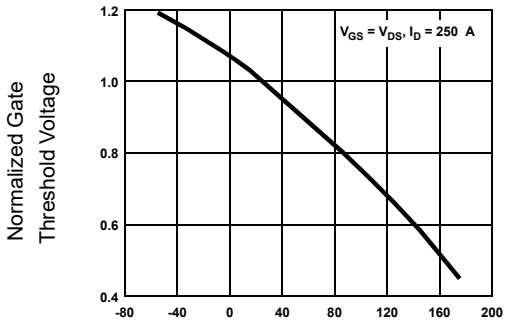

T_J, Junction Temperature (°C)

Figure 11: Normalized Gate Threshold Voltage vs Junction Temperature

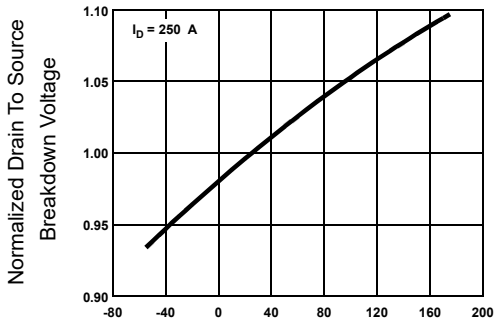

T_J, Junction Temperature (°C)

Figure 12: Normalized Drain to Source Breakdown Voltage vs Junction Temperature

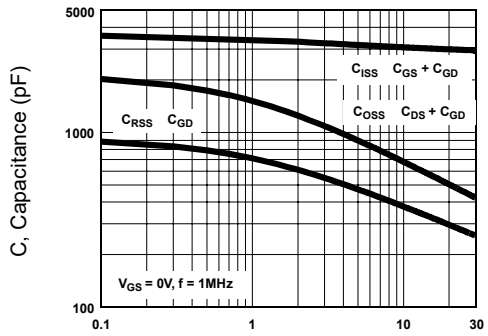

V_{DS}, Drain To Source Voltage (V)

Figure 13: Capacitance vs Drain to Source Voltage

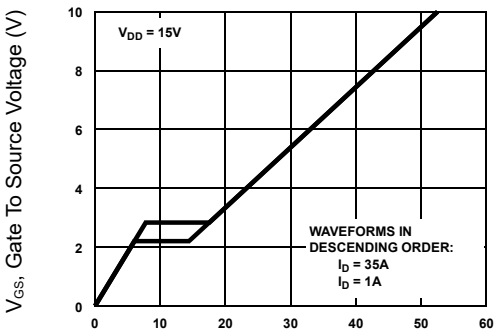

Q_g, Gate Charge (nC)

Figure 14: Gate Charge Waveforms for Constant Gate Current

7.4Typical characteristic

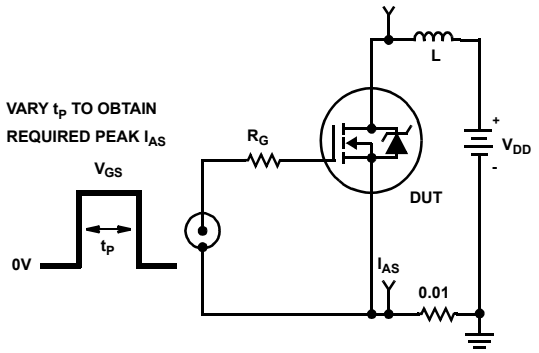

Figure 15. Unclamped Energy Test Circuit

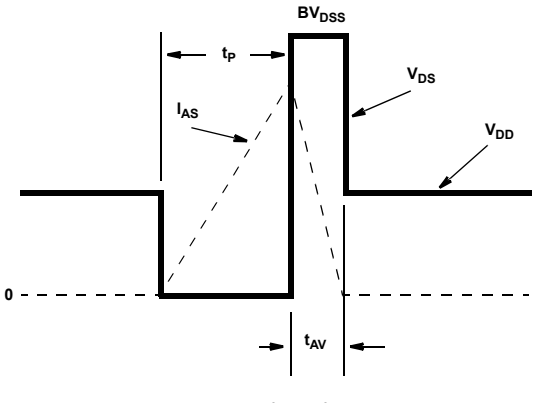

Figure 16. Unclamped Energy Waveforms

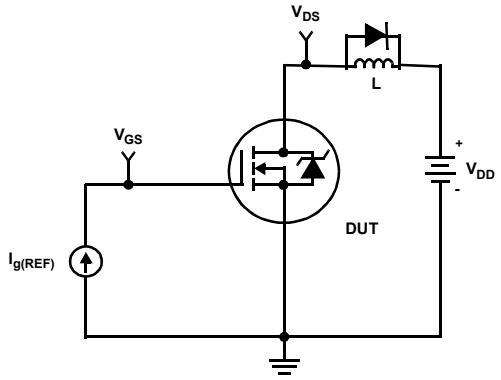

Figure 17. Gate Charge Test Circuit

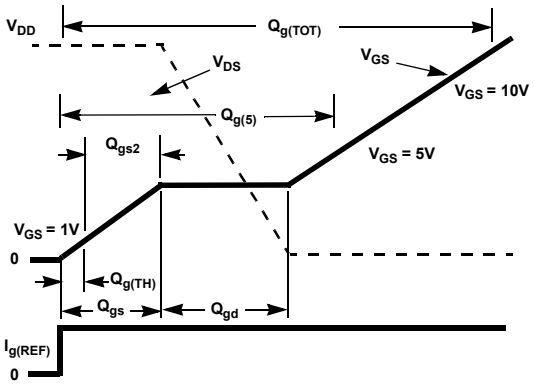

Figure 18. Gate Charge Waveforms

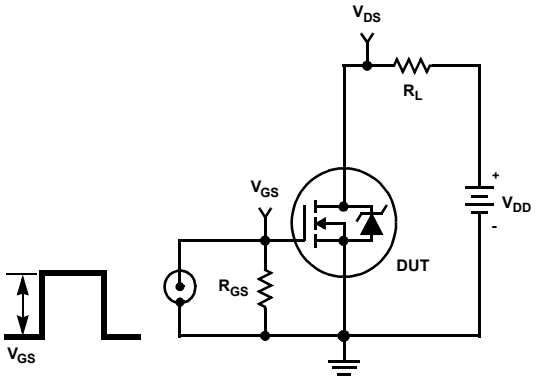

Figure 19. Switching Time Test Circuit

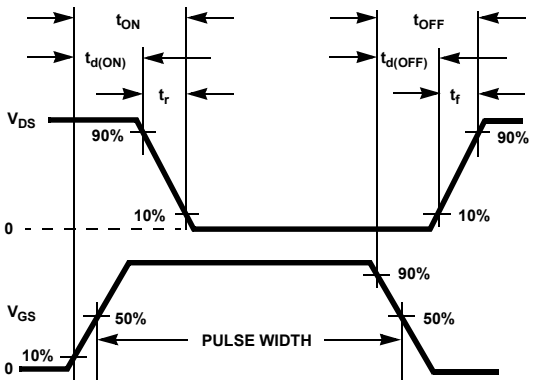

Figure 20. Switching Time Waveforms

8.TO-252 Package Outline Dimensions

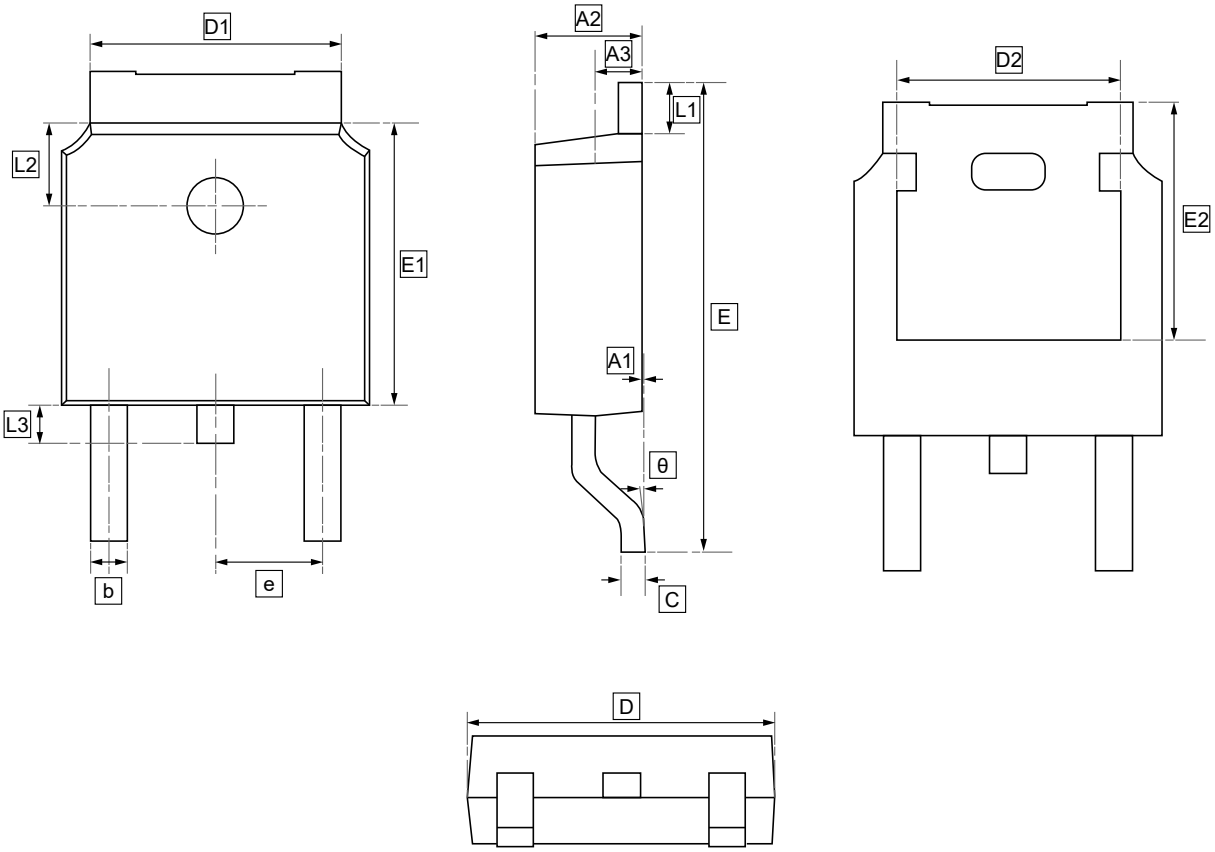

DIMENSIONS (mm are the original dimensions)

Symbol	A1	A2	A3	b	c	D	D1	D2	E	E1	E2	e	L1	L2	L3	θ
Min	0.00	2.18	0.90	0.65	0.46	6.35	4.95	4.32	9.40	5.97	5.21	2.286	0.89	1.70	0.60	0.00
Max	0.13	2.39	1.10	0.85	0.61	6.73	5.46	4.90	10.41	6.22	5.38	BSC	1.27	1.90	1.00	8.00

9.Ordering information

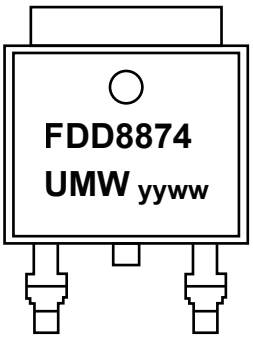

yy: Year Code
ww: Week Code

Order Code	Package	Base QTY	Delivery Mode
UMW FDD8874	TO-252	2500	Tape and reel

10.Disclaimer

UMW reserves the right to make changes to all products, specifications. Customers should obtain the latest version of product documentation and verify the completeness and currency of the information before placing an order.

When applying our products, please do not exceed the maximum rated values, as this may affect the reliability of the entire system. Under certain conditions, any semiconductor product may experience faults or failures. Buyers are responsible for adhering to safety standards and implementing safety measures during system design, prototyping, and manufacturing when using our products to prevent potential failure risks that could lead to personal injury or property damage.

Unless explicitly stated in writing, UMW products are not intended for use in medical, life-saving, or life-sustaining applications, nor for any other applications where product failure could result in personal injury or death. If customers use or sell the product for such applications without explicit authorization, they assume all associated risks.

When reselling, applying, or exporting, please comply with export control laws and regulations of China, the United States, the United Kingdom, the European Union, and other relevant countries, regions, and international organizations.

This document and any actions by UMW do not grant any intellectual property rights, whether express or implied, by estoppel or otherwise. The product names and marks mentioned herein may be trademarks of their respective owners.