UMW FDS8878

30V N-Channel MOSFET

1.Features

This N-Channel MOSFET has been designed specifically to improve the overall efficiency of DC/DC converters using either synchronous or conventional switching PWM controllers. It has been optimized for low gate charge, low $R_{DS(ON)}$ and fast switching speed.

2.Features

- $V_{DS\ (V)}$=30V
- I_D=10.2A
- $R_{DS(ON)}$<14mΩ(V_{GS}=10V)
- $R_{DS(ON)}$<17 mΩ(V_{GS}=4.5V)

3.Pinning information

Pin	Symbol	Description
4	G	GATE
1,2,3	S	SOURCE
5,6,7,8	D	DRAIN

SOP-8

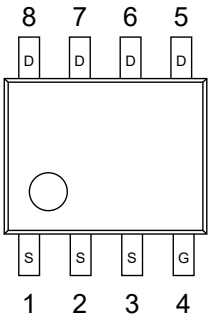

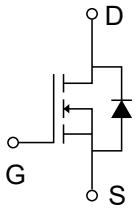

4.Absolute Maximum Ratings T_A=25°C unless otherwise noted

Parameter	Symbol	Rating	Units
Drain-Source Voltage	V_{DSS}	30	V
Gate-Source Voltage	V_{GS}	±20	
Drain Current Continuous (T_A=25°C, V_{GS}=10V, $R_{\theta JA}$=50°C/W)	I_D	10.2	A
Continuous (T_A=25°C, V_{GS}=4.5V, $R_{\theta JA}$=50°C/W)		9.3	
Pulsed		80	
Single Pulse Avalanche Energy (Note 1)	E_{AS}	57	mJ
Power Dissipation	P_D	2.5	W
Derate above 25°C		20	mW/°C
Operating and Storage Temperature	T_J,T_{STG}	-55 to 150	°C

5.Thermal Characteristics

Parameter	Symbol	Rating	Units
Thermal Resistance, Junction to Case (Note 2)	$R_{\theta JC}$	25	°C/W
Thermal Resistance, Junction to Ambient (Note 2a)	$R_{\theta JA}$	50	°C/W
Thermal Resistance, Junction to Ambient (Note 2b)	$R_{\theta JA}$	125	°C/W

6.Electrical Characteristics (T_J=25°C unless otherwise noted)

Parameter	Symbol	Conditions	Min	Typ	Max	Units
Drain-Source Breakdown Voltage	BV_{DSS}	I_D=250μA, V_{GS}=0V	30			V
Zero Gate Voltage Drain Current	I_{DSS}	V_{DS}=24V, V_{GS}=0V			1	μA
		T_J=150°C			250	μA
Gate to Source Leakage Current	I_{GSS}	V_{GS}=±20V			±100	nA
Gate to Source Threshold Voltage	$V_{GS(th)}$	V_{DS}=V_{GS}, I_D=250μA	1.2		2.5	V
Drain to Source On Resistance	$R_{DS(ON)}$	I_D=10.2A, V_{GS}=10V		11	14	mΩ
		I_D=9.3A, V_{GS}=4.5V		13.8	17	mΩ
		I_D=10.2A, V_{GS}=10V, T_C=150°C		17.5	22.7	mΩ
Input Capacitance	C_{iss}	V_{DS}=15V, V_{GS}=0V, f=1MHz		897		pF
Output Capacitance	C_{oss}			190		pF
Reverse Transfer Capacitance	C_{rss}			111		pF
Gate Resistance	R_g	V_{GS}=0.5V, f=1MHz	0.7	2.9	5	Ω
Total Gate Charge at 10V	$Q_{g(TOT)}$	V_{GS}=0V to 10V; V_{DD}=15V		17	26	nC
Total Gate Charge at 5V	$Q_{g(5)}$	V_{GS}=0V to 5V; I_D=10.2A		9	14	nC
Threshold Gate Charge	$Q_{g(TH)}$	V_{GS}=0V to 1V; I_g=1mA		0.9	1.4	nC
Gate to Source Gate Charge	Q_{gs}			2.5		nC
Gate Charge Threshold to Plateau	Q_{gs2}			1.7		nC
Gate to Drain “Miller” Charge	Q_{gd}			3.3		nC
Turn-On Time	t_{on}	V_{DD}=50V, I_D=10.2A, V_{GS}=10V, R_{GS}=16Ω			54	ns
Turn-On Delay Time	$t_{D(on)}$			7		ns
Rise Time	t_r			29		ns
Turn-Off Delay Time	$t_{D(off)}$			45		ns
Fall Time	t_f			18		ns
Turn-Off Time	t_{off}				94	ns

Source to Drain Diode Voltage	V_{SD}	I_{SD}=10.2A			1.25	V
		I_{SD}=2.1A			1	V
Reverse Recovery Time	t_{rr}	I_{SD}=10.2A, dI_{SD}/dt=100A/μs			19	ns
Reverse Recovered Charge	Q_{rr}	I_{SD}=10.2A, dI_{SD}/dt=100A/μs			9.5	nC

Notes:

1: Starting T_J=25°C, L=1mH, I_{AS}=10.7A, V_{DD}=30V, V_{GS}=10V.

2: $R_{\theta JA}$ is the sum of the junction-to-case and case-to-ambient thermal resistance where the case thermal reference is defined as the solder mounting surface of the drain pins. $R_{\theta JC}$ is guaranteed by design while $R_{\theta JA}$ is determined by the user's board design.

a) 50°C/W when mounted on a 1in^2 pad of 2 oz copper.

b) 125°C/W when mounted on a minimum pad.

7.1Typical Characteristics

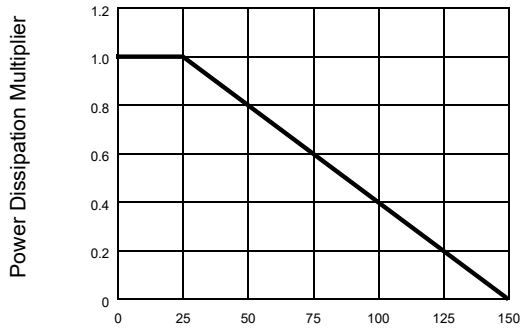

Figure 1: Normalized Power Dissipation vs Ambient Temperature

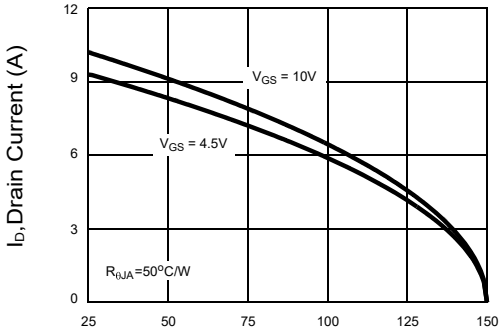

Figure 2: Maximum Continuous Drain Current vs Ambient Temperature

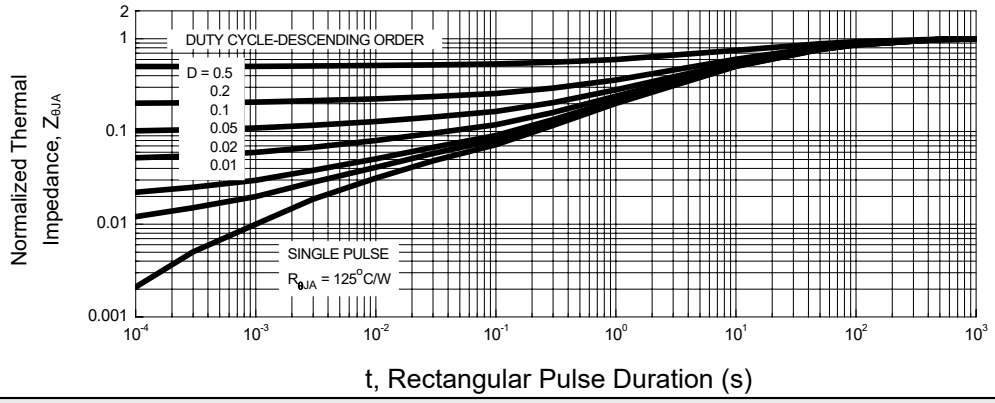

Figure 3: Normalized Maximum Transient Thermal Impedance

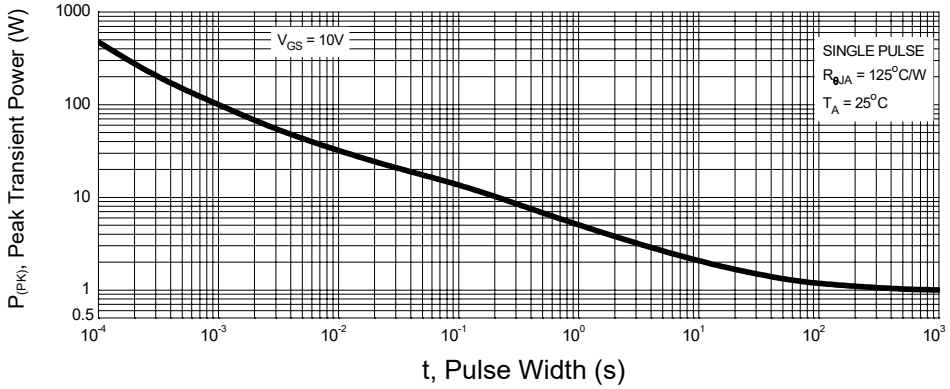

Figure 4: Single Pulse Maximum Power Dissipation

7.2Typical Characteristics

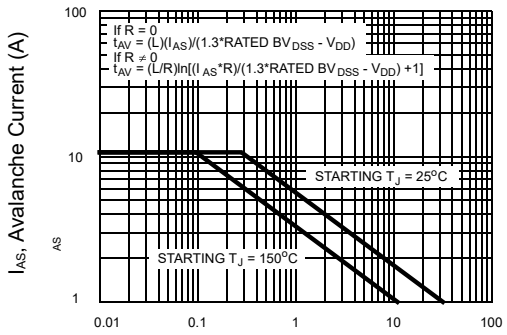

t_{AV}, Time In Avalanche(ms)

Figure 5: Unclamped Inductive Switching Capability

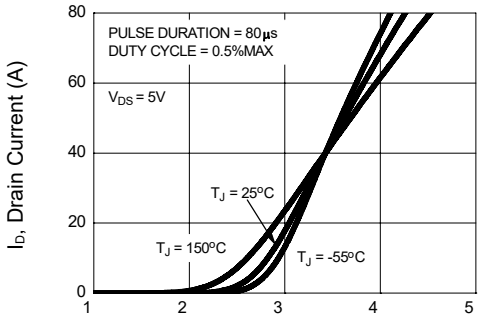

V_{DS},Drain to Source Voltage (V)

Figure 6: Transfer Characteristics

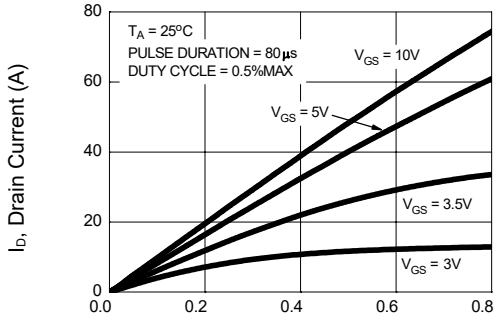

V_{DS},Drain to Source Voltage (V)

Figure 7: Saturation Characteristics

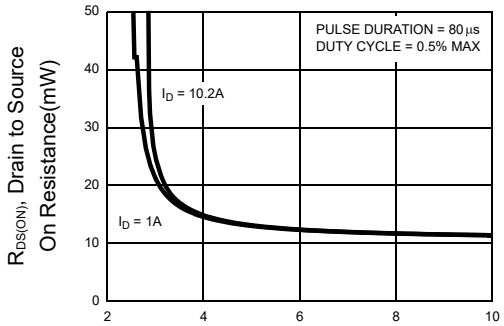

V_{GS},Gate to Source Voltage (V)

Figure 8: Drain to Source On Resistance vs Gate Voltage and Drain Current

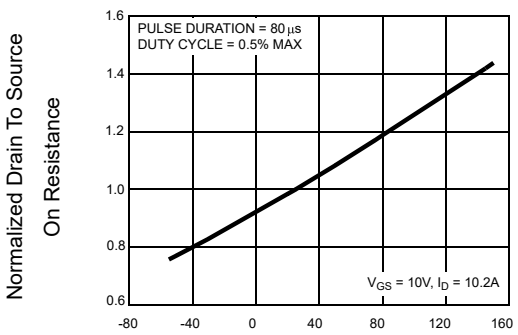

T_J,Junction Temperature (°C)

Figure 9: Normalized Drain to Source On Resistance vs Junction Temperature

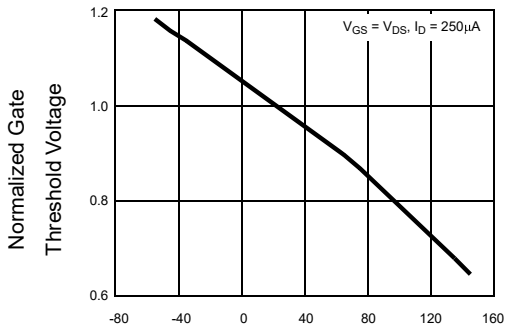

T_J,Junction Temperature (°C)

Figure 10: Normalized Gate Threshold Voltage vs Junction Temperature

7.3Typical Characteristics

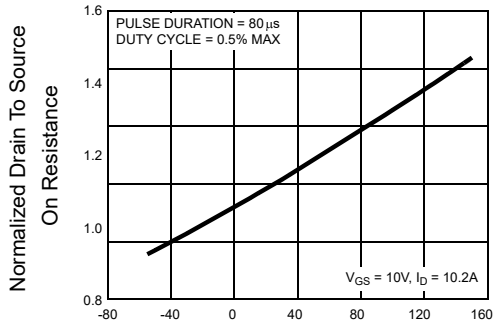

T_J,Junction Temperature (°C)

Figure 11: Normalized Drain to Source Breakdown Voltage vs Junction Temperature

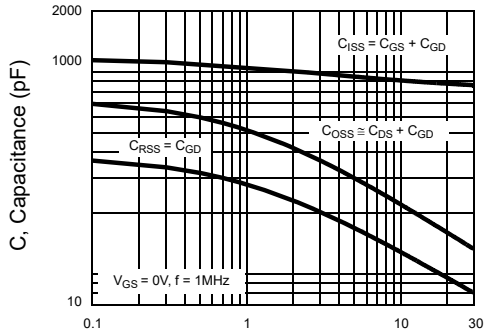

V_{DS},Drain to Source Voltage (V)

Figure 12: Capacitance vs Drain to Source Voltage

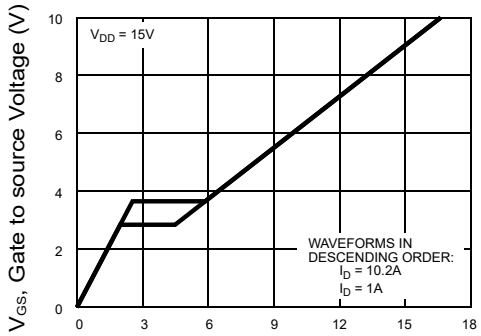

Q_G,Gate Charge (nC)

Figure 13: Gate Charge Waveforms for Constant Gate Currents

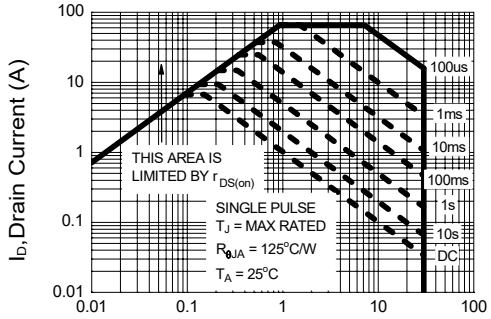

V_{DS},Drain to Source Voltage (V)

Figure 14: Forward Bias Safe Operating Area

7.4Typical Characteristics

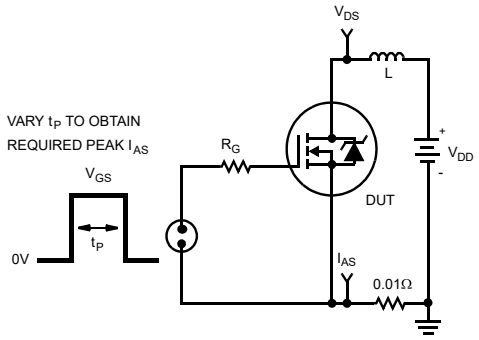

Figure 12: Unclamped Energy Test Circuit

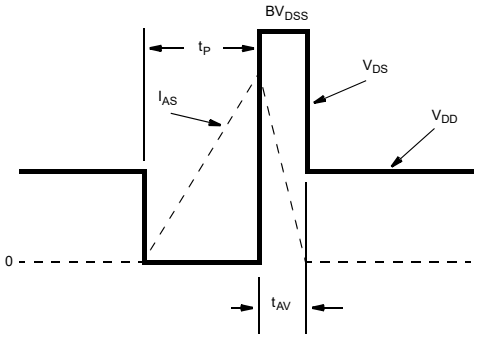

Figure 12: Unclamped Energy Waveforms

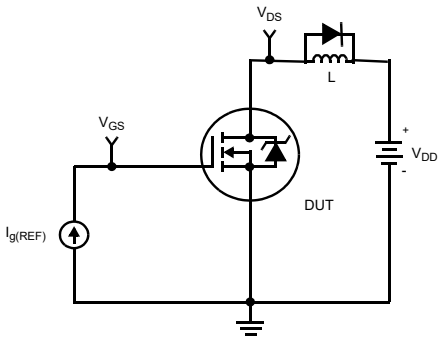

Figure 12: Gate Charge Test Circuit

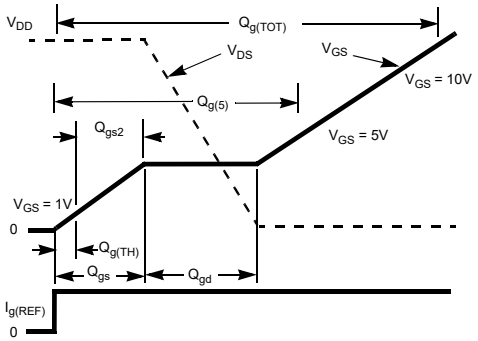

Figure 12: Gate Charge Waveforms

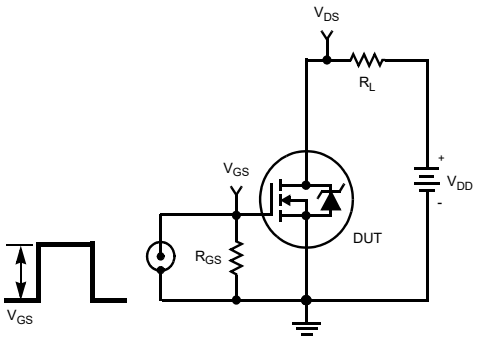

Figure 12: Switching Time Test Circuit

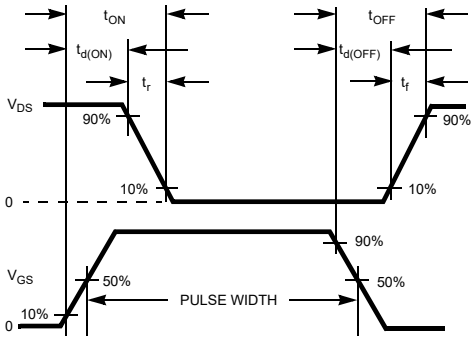

Figure 12: Switching Time Waveforms

8.SOP-8 Package Outline Dimensions

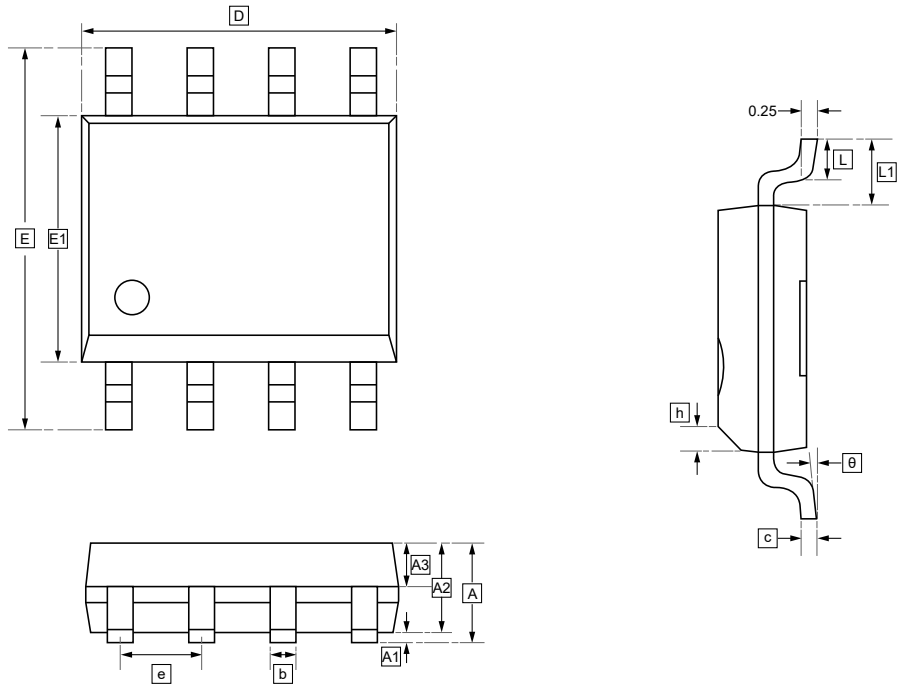

DIMENSIONS (mm are the original dimensions)

Symbol	A	A1	A2	A3	b	c	D	E	E1	e	h	L
Min	-	0.05	1.30	0.60	0.39	0.20	4.70	5.80	3.80	1.24	0.30	0.50
Max	1.75	0.20	1.50	0.70	0.47	0.24	5.10	6.20	4.00	1.30	0.50	0.80

Symbol	L1	θ
Min	1.00	0°
Max	1.10	8°

9.Ordering information

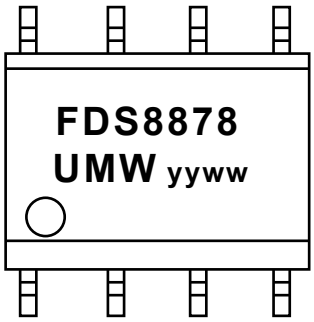

yy: Year Code
ww: Week Code

Order Code	Package	Base QTY	Delivery Mode
UMW FDS8878	SOP-8	3000	Tape and reel

10.Disclaimer

UMW reserves the right to make changes to all products, specifications. Customers should obtain the latest version of product documentation and verify the completeness and currency of the information before placing an order.

When applying our products, please do not exceed the maximum rated values, as this may affect the reliability of the entire system. Under certain conditions, any semiconductor product may experience faults or failures. Buyers are responsible for adhering to safety standards and implementing safety measures during system design, prototyping, and manufacturing when using our products to prevent potential failure risks that could lead to personal injury or property damage.

Unless explicitly stated in writing, UMW products are not intended for use in medical, life-saving, or life-sustaining applications, nor for any other applications where product failure could result in personal injury or death. If customers use or sell the product for such applications without explicit authorization, they assume all associated risks.

When reselling, applying, or exporting, please comply with export control laws and regulations of China, the United States, the United Kingdom, the European Union, and other relevant countries, regions, and international organizations.

This document and any actions by UMW do not grant any intellectual property rights, whether express or implied, by estoppel or otherwise. The product names and marks mentioned herein may be trademarks of their respective owners.