1.Description

UMW HT70xx series is a three-port low voltage detector implemented with CMOS technology. This series of detectors can detect fixed voltages of 2.2V~5V. The detector consists of 4 parts: high-precision and low-power standard voltage source, comparator, hysteresis circuit, and output driver. CMOS technology ensures low power consumption. Although the detector is mainly designed for fixed voltage detection, it can also detect the threshold voltage specified by the user through peripheral components (only for NMOS open-drain type).

2.Features

- Low power consumption, typical value: 2.0uA
- Wide operating voltage range: 1.5V~12V
- Low temperature drift detection voltage: typical value ±50ppm/°C
- Built-in hysteresis
- High-precision voltage detection: ±3%

Small package: SOT-89, TO-92, SOT-23

3.Applications

- Battery detector, level selector
- Power failure detector

Microcomputer reset

- Non-volatile RAM signal storage protector
- Battery storage backup

4.Pinning information

Pin number		Symbol	Description
TO-92/SOT-89	SOT-23		
1	1	OUT	Chip output
2	3	VDD	Chip input
3	2	GND	Chip ground

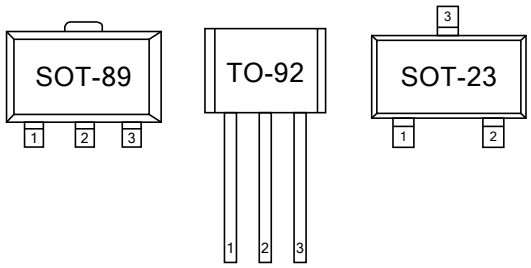

5.Functional Block Diagram

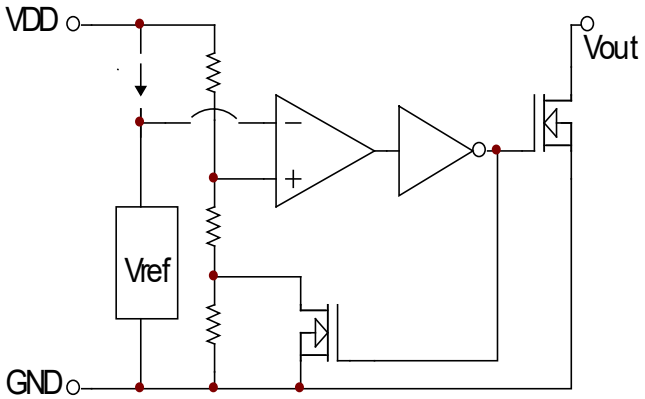

6.Built-in Hysteresis

Direction of solid line: V_{IN} from H to L change
Dashed line direction: V_{IN} from L to H change

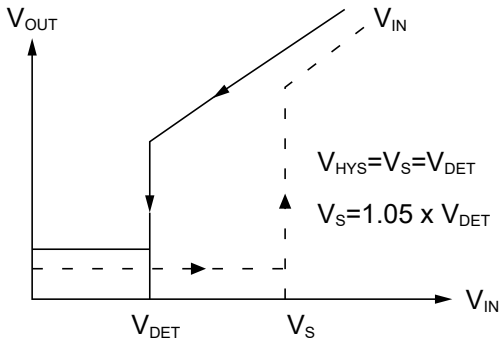

7.Application Circuit

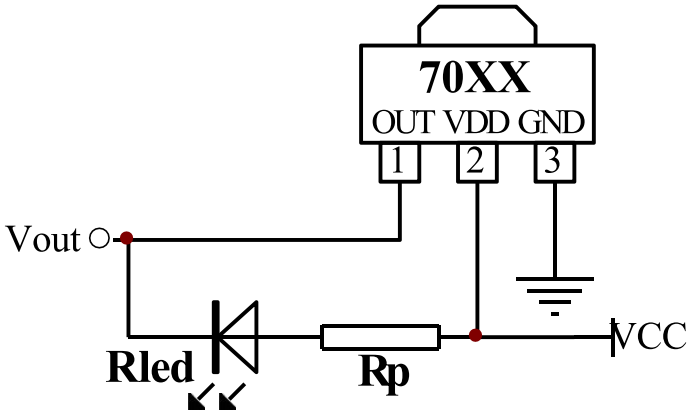

8.Absolute Maximum Ratings

Project	Symbol	Description	Limit Value	Unit
Voltage	V_{DD}	Input Voltage	15	V
	V_{OUT}	Output Voltage	GND-0.3~V_{DD}+0.3	V
Power Dissipation	P_D	Maximum Power Dissipation	400	mW
Temperature	T_w	Operating Temperature Range	-40 to 85	°C
	T_c	Storage Temperature Range	-50 to 125	°C
	T_h	Soldering Temperature	260	°C,10s

9.1 Electrical Characteristics (7020, T_A=25°C)

Parameter	Symbol	Conditions	V_{DD}	Min	Typ	Max	Units
Detection Voltage	V_{DET}			1.94	2	2.060	V
Hysteresis Voltage	V_{HYS}			$0.02V_{DET}$	$0.05V_{DET}$	$0.1V_{DET}$	V
Quiescent Current	I_{DD}	No Load	3V		2	4	μA
Operating Voltage	V_{DD}			1.5		12	V
Output Current	I_{OL}	V_{OUT}=0.2V	V_{DET}-0.2V	1	2		ma
Temperature Coefficient	$\Delta V_{DET}/T_A$	0°C≤T_A≤70°C			±0.9		mV/°C

9.2 Electrical Characteristics (7022, T_A=25°C)

Parameter	Symbol	Conditions	V_{DD}	Min	Typ	Max	Units
Detection Voltage	V_{DET}			2.134	2.2	2.266	V
Hysteresis Voltage	V_{HYS}			$0.02V_{DET}$	$0.05V_{DET}$	$0.1V_{DET}$	V
Quiescent Current	I_{DD}	No Load	3.2V		2	4	μA
Operating Voltage	V_{DD}			1.5		12	V
Output Current	I_{OL}	V_{OUT}=0.2V	V_{DET}-0.2V	1	2		ma
Temperature Coefficient	$\Delta V_{DET}/T_A$	0°C≤T_A≤70°C			±0.9		mV/°C

9.3 Electrical Characteristics (7024, T_A=25°C)

Parameter	Symbol	Conditions	V_{DD}	Min	Typ	Max	Units
Detection Voltage	V_{DET}			2.328	2.4	2.472	V
Hysteresis Voltage	V_{HYS}			$0.02V_{DET}$	$0.05V_{DET}$	$0.1V_{DET}$	V
Quiescent Current	I_{DD}	No Load	3.4V		2	4	μA
Operating Voltage	V_{DD}			1.5		12	V
Output Current	I_{OL}	V_{OUT}=0.2V	V_{DET}-0.2V	1	2		ma
Temperature Coefficient	$\Delta V_{DET}/T_A$	0°C≤T_A≤70°C			±0.9		mV/°C

9.4 Electrical Characteristics (7027, T_A=25°C)

Parameter	Symbol	Conditions	V_{DD}	Min	Typ	Max	Units
Detection Voltage	V_{DET}			2.619	2.7	2.781	V
Hysteresis Voltage	V_{HYS}			$0.02V_{DET}$	$0.05V_{DET}$	$0.1V_{DET}$	V
Quiescent Current	I_{DD}	No Load	3.7V		2	4	μA
Operating Voltage	V_{DD}			1.5		12	V
Output Current	I_{OL}	V_{OUT}=0.2V	V_{DET}-0.2V	1	2		ma
Temperature Coefficient	$\Delta V_{DET}/T_A$	0°C≤T_A≤70°C			±0.9		mV/°C

9.5 Electrical Characteristics (7030, T_A=25°C)

Parameter	Symbol	Conditions	V_{DD}	Min	Typ	Max	Units
Detection Voltage	V_{DET}			2.91	3	3.09	V
Hysteresis Voltage	V_{HYS}			$0.02V_{DET}$	$0.05V_{DET}$	$0.1V_{DET}$	V
Quiescent Current	I_{DD}	No Load	4V		2	4	μA
Operating Voltage	V_{DD}			1.5		12	V
Output Current	I_{OL}	V_{OUT}=0.2V	V_{DET}-0.2V	2	4		ma
Temperature Coefficient	$\Delta V_{DET}/T_A$	0°C≤T_A≤70°C			±0.9		mV/°C

9.6 Electrical Characteristics (7033, T_A=25°C)

Parameter	Symbol	Conditions	V_{DD}	Min	Typ	Max	Units
Detection Voltage	V_{DET}			3.201	3.3	3.399	V
Hysteresis Voltage	V_{HYS}			$0.02V_{DET}$	$0.05V_{DET}$	$0.1V_{DET}$	V
Quiescent Current	I_{DD}	No Load	4.3V		2	4	μA
Operating Voltage	V_{DD}			1.5		12	V
Output Current	I_{OL}	V_{OUT}=0.2V	V_{DET}-0.2V	2	4		ma
Temperature Coefficient	$\Delta V_{DET}/T_A$	0°C≤T_A≤70°C			±0.9		mV/°C

9.7 Electrical Characteristics (7036, T_A=25°C)

Parameter	Symbol	Conditions	V_{DD}	Min	Typ	Max	Units
Detection Voltage	V_{DET}			3.492	3.6	3.708	V
Hysteresis Voltage	V_{HYS}			$0.02V_{DET}$	$0.05V_{DET}$	$0.1V_{DET}$	V
Quiescent Current	I_{DD}	No Load	4.6V		2	4	μA
Operating Voltage	V_{DD}			1.5		12	V
Output Current	I_{OL}	V_{OUT}=0.2V	V_{DET}-0.2V	2	4		ma
Temperature Coefficient	$\Delta V_{DET}/T_A$	0°C≤T_A≤70°C			±0.9		mV/°C

9.8 Electrical Characteristics (7039, T_A=25°C)

Parameter	Symbol	Conditions	V_{DD}	Min	Typ	Max	Units
Detection Voltage	V_{DET}			3.783	3.9	4.017	V
Hysteresis Voltage	V_{HYS}			$0.02V_{DET}$	$0.05V_{DET}$	$0.1V_{DET}$	V
Quiescent Current	I_{DD}	No Load	4.9V		2	4	μA
Operating Voltage	V_{DD}			1.5		12	V
Output Current	I_{OL}	V_{OUT}=0.2V	V_{DET}-0.2V	4	6		ma
Temperature Coefficient	$\Delta V_{DET}/T_A$	0°C≤T_A≤70°C			±0.9		mV/°C

9.9 Electrical Characteristics (7044, T_A=25°C)

Parameter	Symbol	Conditions	V_{DD}	Min	Typ	Max	Units
Detection Voltage	V_{DET}			4.268	4.4	4.532	V
Hysteresis Voltage	V_{HYS}			$0.02V_{DET}$	$0.05V_{DET}$	$0.1V_{DET}$	V
Quiescent Current	I_{DD}	No Load	5.4V		2	4	μA
Operating Voltage	V_{DD}			1.5		12	V
Output Current	I_{OL}	V_{OUT}=0.2V	V_{DET}-0.2V	4	6		ma
Temperature Coefficient	$\Delta V_{DET}/T_A$	0°C≤T_A≤70°C			±0.9		mV/°C

9.10 Electrical Characteristics (7050, T_A=25°C)

Parameter	Symbol	Conditions	V_{DD}	Min	Typ	Max	Units
Detection Voltage	V_{DET}			4.85	5	5.15	V
Hysteresis Voltage	V_{HYS}			$0.02V_{DET}$	$0.05V_{DET}$	$0.1V_{DET}$	V
Quiescent Current	I_{DD}	No Load	6V		2	4	μA
Operating Voltage	V_{DD}			1.5		12	V
Output Current	I_{OL}	V_{OUT}=0.2V	V_{DET}-0.2V	4	6		ma
Temperature Coefficient	$\Delta V_{DET}/T_A$	0°C≤T_A≤70°C			±0.9		mV/°C

10.1 SOT-89 Package Outline Dimensions

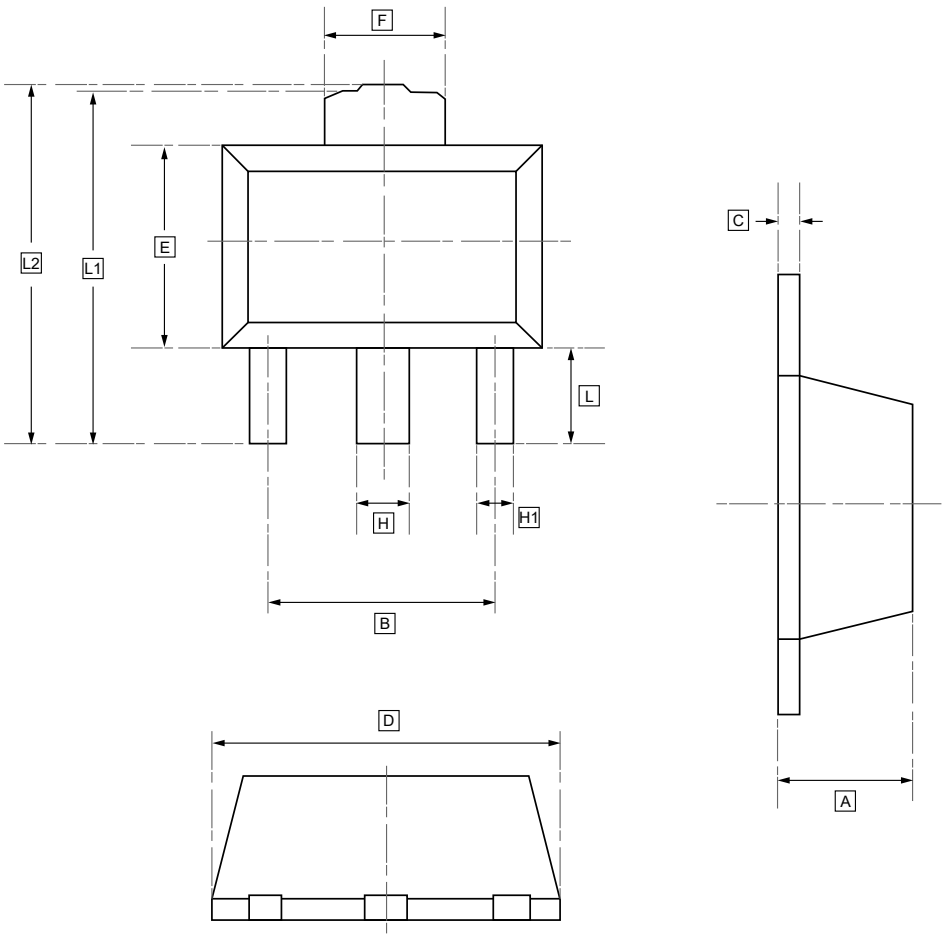

DIMENSIONS (mm are the original dimensions)

Symbol	A	B	C	D	E	F	H	H1	L	L1	L2
Min	1.450	2.950	0.330	4.450	2.450	1.650	0.450	0.370	0.900	4.100	4.100
Max	1.550	3.050	0.430	4.550	2.550	1.750	0.580	0.480	1.000	4.300	4.350

10.2 SOT-23 Package Outline Dimensions

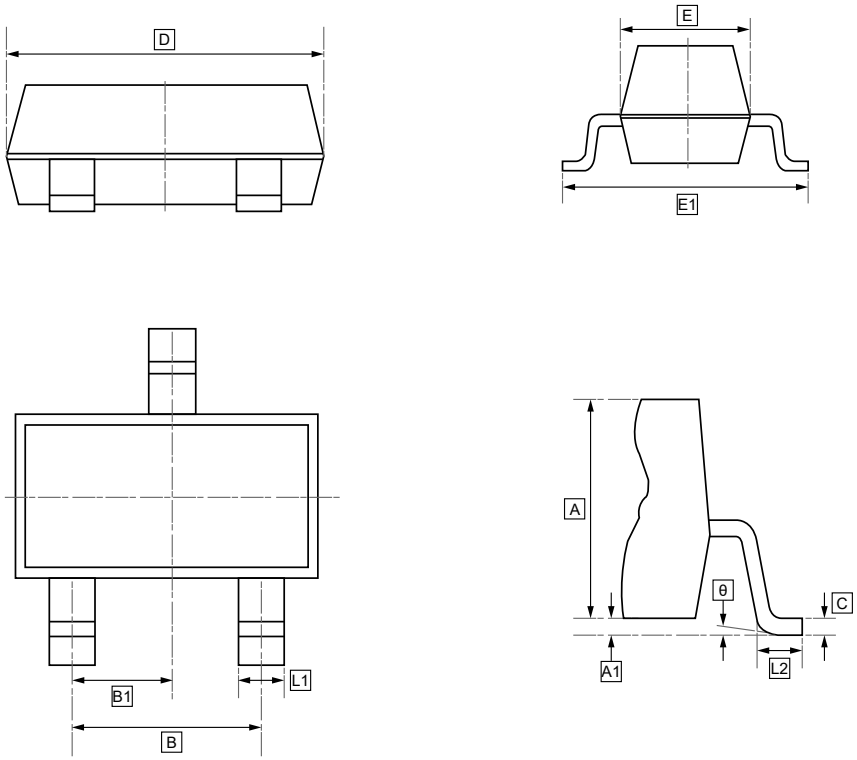

DIMENSIONS (mm are the original dimensions)

Symbol	A	A1	L1	L2	C	D	E	E1	B	B1	θ
Min	0.900	0.020	0.300	0.300	0.100	2.800	1.200	2.300	1.800	0.950	0°
Max	1.100	0.100	0.500	0.500	0.120	3.000	1.400	2.500	2.000	TYP	8°

10.3 TO-92 Package Outline Dimensions

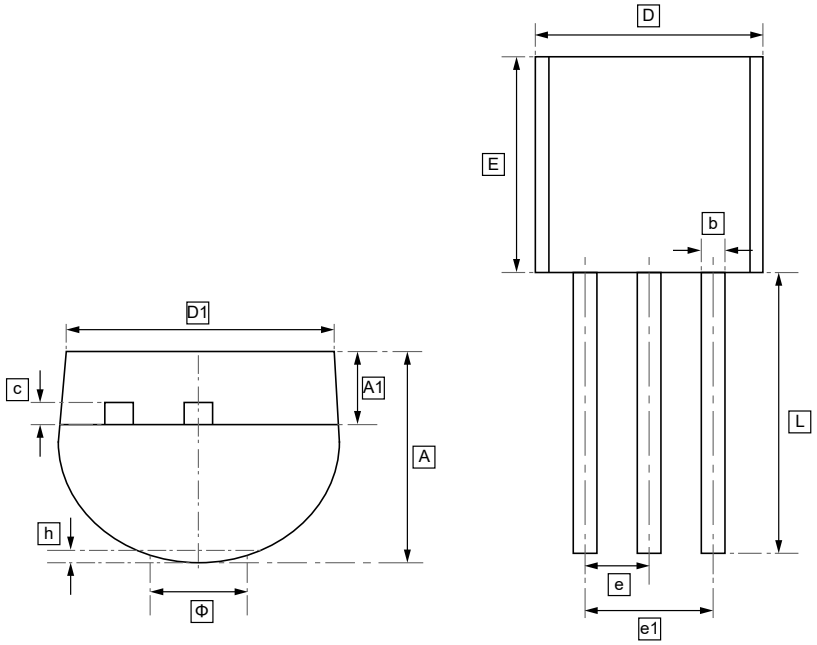

DIMENSIONS (mm are the original dimensions)

Symbol	A	A1	b	c	D	D1	E	e	e1	L	Φ	h
Min	3.300	1.100	0.380	0.360	4.400	3.430	4.300	1.270	2.440	14.100	1.600	0.000
Max	3.700	1.400	0.550	0.510	4.700		4.700	TYP	2.640	14.500		0.380

11.Ordering Information

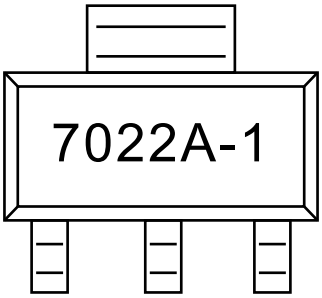

Order Code	Marking	Package	Base QTY	Delivery Mode
UMW HT7022-1	7022A-1	SOT-89	1000	Tape and reel
UMW HT7022S	M23X	SOT-23	3000	Tape and reel
UMW HT7024-1	7024A-1	SOT-89	1000	Tape and reel
UMW HT7024S	M43X	SOT-23	3000	Tape and reel
UMW HT7027-1	7027A-1	SOT-89	1000	Tape and reel
UMW HT7027S	M73X	SOT-23	3000	Tape and reel
UMW HT7030-1	7030A-1	SOT-89	1000	Tape and reel
UMW HT7030S	N03X	SOT-23	3000	Tape and reel
UMW HT7033-1	7033A-1	SOT-89	1000	Tape and reel
UMW HT7033S	N33X	SOT-23	3000	Tape and reel
UMW HT7036-1	7036A-1	SOT-89	1000	Tape and reel
UMW HT7036S	N63X	SOT-23	3000	Tape and reel
UMW HT7039-1	7039A-1	SOT-89	1000	Tape and reel
UMW HT7039S	N93X	SOT-23	3000	Tape and reel
UMW HT7044-1	7044A-1	SOT-89	1000	Tape and reel
UMW HT7044S	P43X	SOT-23	3000	Tape and reel
UMW HT7050-1	7050A-1	SOT-89	1000	Tape and reel
UMW HT7050S	R03X	SOT-23	3000	Tape and reel

12.Disclaimer

UMW reserves the right to make changes to all products, specifications. Customers should obtain the latest version of product documentation and verify the completeness and currency of the information before placing an order.

When applying our products, please do not exceed the maximum rated values, as this may affect the reliability of the entire system. Under certain conditions, any semiconductor product may experience faults or failures. Buyers are responsible for adhering to safety standards and implementing safety measures during system design, prototyping, and manufacturing when using our products to prevent potential failure risks that could lead to personal injury or property damage.

Unless explicitly stated in writing, UMW products are not intended for use in medical, life-saving, or life-sustaining applications, nor for any other applications where product failure could result in personal injury or death. If customers use or sell the product for such applications without explicit authorization, they assume all associated risks.

When reselling, applying, or exporting, please comply with export control laws and regulations of China, the United States, the United Kingdom, the European Union, and other relevant countries, regions, and international organizations.

This document and any actions by UMW do not grant any intellectual property rights, whether express or implied, by estoppel or otherwise. The product names and marks mentioned herein may be trademarks of their respective owners.