UMW IR2110STR

600V 4A Half Bridge MOSFET/IGBT Gate Driver

1.Description

The UMW IR2110STR is a high voltage, high speed power MOSFET drivers with dependent high and low-side referenced output channels. Proprietary HVIC and latch immune CMOS technologies enable ruggedized monolithic co-nstruction.The logic input is compatible with standard CMOS or LSTTL output, down to 3.3V logic. The output drivers feature a high pulse current buffer stage designed for minimum driver cross-conduction. The floating channel can be used to drive an N-channel power MOSFET in the high-side configuration which operates up to 600V.

2.Application

- UPS Universal inverter
- Half-bridge and full-bridge converters in AC and DC power supplies
- High-density switching power supplies for servers, telecommunications, IT and industrial infrastructure
- Solar inverter and motor driver

3.Features

- Floating channel designed for bootstrap operation
- Fully operational to +600V
- 3.3V, 5V and 15V input logic compatible
- Tolerant to negative transient voltage dV/dt immune
- Allowable negative Vs capability: -9V
- Gate drive supply range from 10V to 20V
- Separate logic supply range from 3.3V to 20V
  Logic and power ground ±5V offset
- Undervoltage lockout for both channels
- Cycle by cycle edge-triggered shutdown logic
- Matched propagation delay for both channels
- Wide operating temperature range
  -40°C ~125°C
- Typically output Source/Sink current capability: 4A/4A

4.Functional Block Diagram

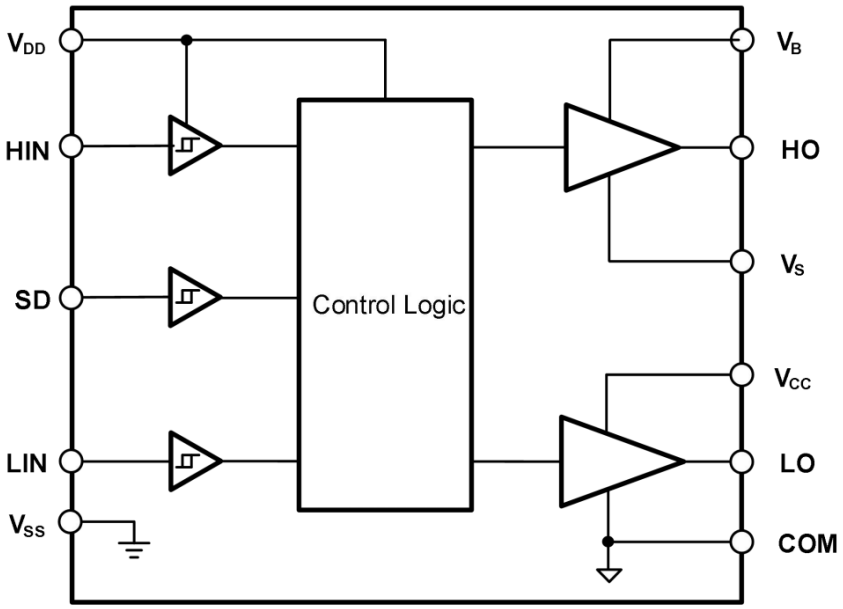

5.Pinning Information

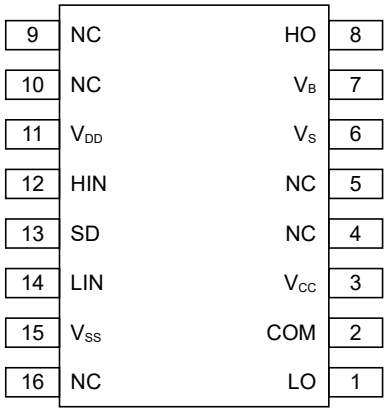

SOP-16-300mil

Table6-1 Lead Definitions

Number	Symbol	Description
1	LO	Low side gate drive output
2	COM	Low side return
3	V_{CC}	Low side supply
6	V_S	High side floating supply return
7	V_B	High side floating supply
8	HO	High side gate drive output
11	V_{DD}	Logic supply
12	HIN	Logic input for high side gate driver output (HO), in phase
13	SD	Logic input for shutdown
14	LIN	Logic input for low side gate driver output (LO), in phase
15	V_{SS}	Logic ground

6.Absolute Maximum Ratings

Exceeding the limit maximum rating may cause permanent damage to the device. All voltage parameters are rated with reference to V_{SS} and an ambient temperature of 25°C.

Parameter	Symbol	Min	Max	Units
High side floating supply	V_B	-0.3	625	V
High side floating supply return	V_S	V_B-25	V_B+0.3	V
High side gate drive output	V_{HO}	V_S-0.3	V_B+0.3	V
Low side and main power supply	V_{CC}	-0.3	25	V
Low side gate drive output	V_{LO}	-0.3	V_{CC}+0.3	V
Logic supply	V_{DD}	-0.3	V_{SS}+25	V
Logic ground	V_{SS}	V_{CC}-25	V_{SS}+0.3	V
Logic input of HIN & LIN	V_{IN}	-0.3	V_{CC}+0.3	V
Allowable Offset Supply Voltage Transient	dV_S/dt		50	V/ns
HBM Model	ESD	1500		V
Machine Model		500		V
Package Power Dissipation @ T_A ≤25°C	P_D		625	mW
Thermal Resistance.,Junction to Ambient	Rth_{JA}		200	W/°C
Junction Temperature	T_J		150	°C
Storage Temperature	T_S	-55	150	°C
Lead Temperature (Soldering, 10 seconds)	T_L		300	°C

7.Recommended Operating Conditions

For proper operation, the device should be used under the following recommended conditions. The bias ratings of VS and VSS are measured at a supply voltage of 15V, and unless otherwise specified, the ratings of all voltage parameters are referenced to VSS and the ambient temperature is 25°C.

Parameter	Symbol	Min	Max	Units
High side floating supply	V_B	V_S+10	V_S+20	V
High side floating supply return	V_S	-9	600	V
High side gate drive output	V_{HO}	V_S	V_B	V
Low side and main power supply	V_{CC}	10	20	V
Low side gate drive output	V_{LO}	0	VCC	V
Logic supply	V_{DD}	V_{SS}+3	V_{SS}+20	V
Logic ground	V_{SS}	-5	5	V
Logic input of HIN & LIN	V_{IN}	0	VCC	V
Ambient temperature	T_A	-40	125	°C

Note1：Transient negative VS can be used for VSS-50V with a pulse width of 50ns, guaranteed by design.

Note2：When the input pulse width is less than 1us, the input pulse cannot be transmitted normally .

8.Electrical Characteristic

Valid for temperature range at T_A=25°C, V_{DD}=V_{CC}=V_B=15V, C_L=1nF, unless otherwise specified.

Parameter	Symbol	Conditions	Min	Typ	Max	Units
Turn-on propagation delay	t_{ON}	V_S=0V		130	200	ns
Turn-off propagation delay	t_{OFF}	V_S=700V		130	200	ns
Shutdown propagation delay	t_{sd}	V_S=700V		130	200	ns
Turn-on rise time	t_R			25	35	ns
Turn-off fall time	t_F			17	25	ns
Matched propagation time delay	MT				10	ns
V_{CC} supply UVLO threshold	V_{CCUV+}		8	8.9	9.8	V
	V_{CCUV-}		7.4	8.2	9	V
hysteresis of V_{CC} UVLO	$V_{CCUVHYS}$			0.7		V
V_{BS} supply UVLO threshold	V_{BSUV+}		8	8.9	9.8	V
	V_{BSUV-}		7.4	8.2	9	V
hysteresis of V_{BS} UVLO	$V_{BSUVHYS}$			0.7		V
High-side floating supply leakage curent	I_{LK}	V_B=V_S=700V			50	μA
Quiescent VB supply current	I_{QBS}	V_{IN}=0V or V_{DD}		70	120	μA
Quiescent V_{CC} supply current	I_{QCC}	V_{IN}=0V or V_{DD}		120	240	μA
Quiescent VDD supply current	I_{QDD}	V_{IN}=0V or V_{DD}		15	30	μA
Logic “1”(HIN&LIN) input voltage	V_{IH}	V_{CC}=10Vto 20V	9.5			V
Logic “0”(HIN&LIN) input voltage	V_{IL}	V_{CC}=10Vto 20V			6	V
High level output voltage, VBIAS -VO	V_{OH}	I_O=0A			1.4	V
Low level output voltage, VO	V_{OL}	I_O=0A			0.1	V
Logic “1” Input bias current	I_{IN+}	V_{IN}=V_{DD}		20	40	μA
Logic “0” input bias current	I_{IN-}	V_{IN}=0V			2	μA
Output high short circuit pulsed current	I_{O+}	V_O=0V, V_{IN}=V_{DD}, PW≤10us	3	4		A
Output low short circuit pulsed current	I_{O-}	V_O=15V, V_{IN}=V_{DD}, PW≤10us	3	4		A

9.Function Description

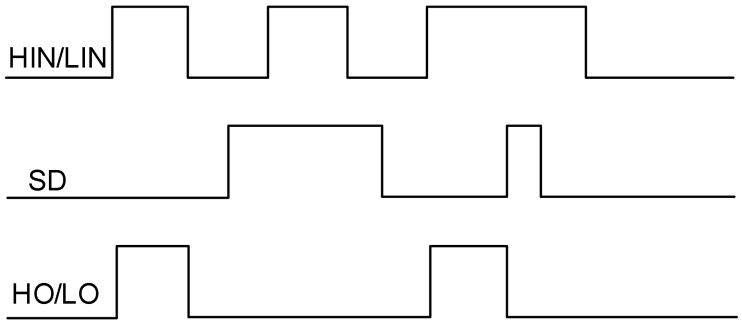

Figure 8-1 IR2110STR Input and output timing waveform

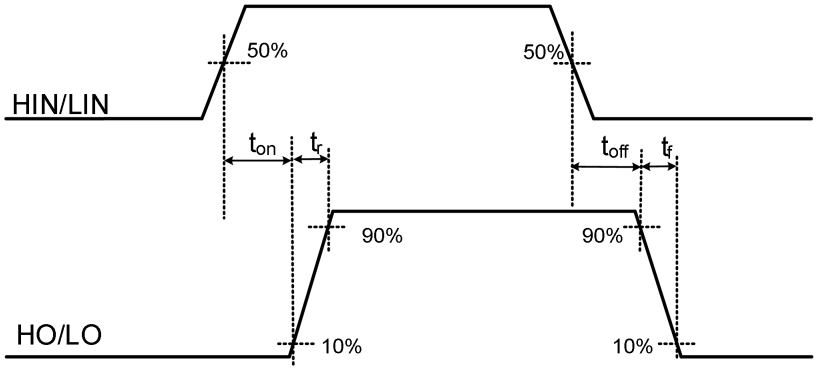

Figure 8-2 Propagation Time Waveform Definition

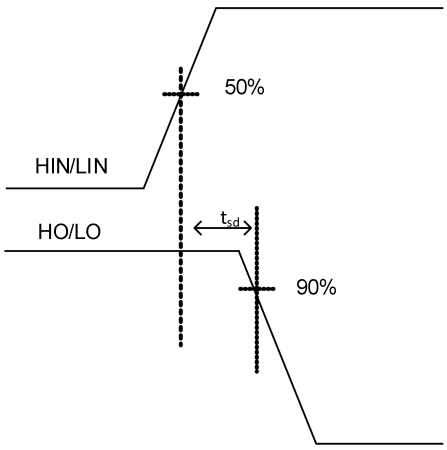

Figure 8-3 Shutdown Propagation Time Waveform Definition

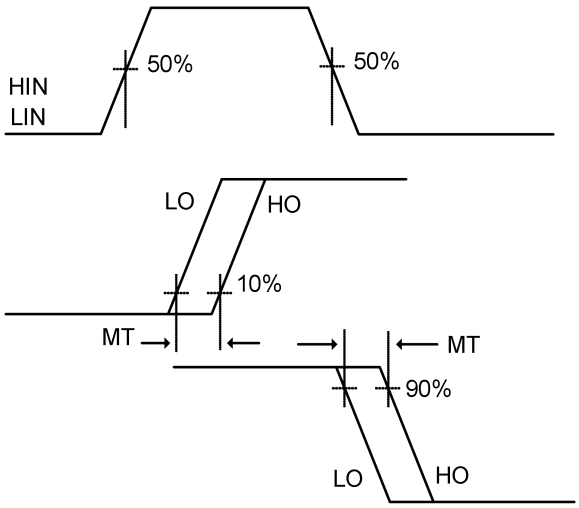

Figure 8-4 Matched propagation time delay Waveform Definition

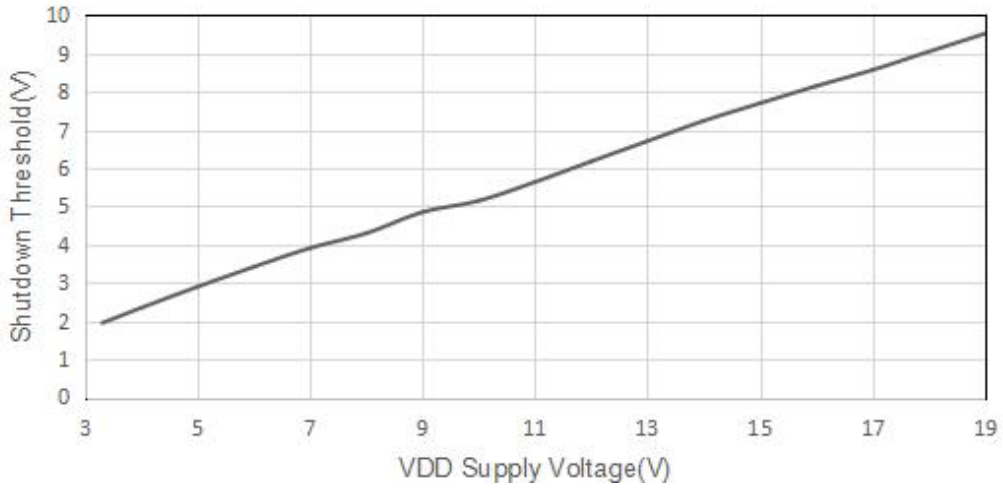

Figure 8-5 Mapping between input threshold voltage and VDD voltage (Typical)

10.Function Block Diagram

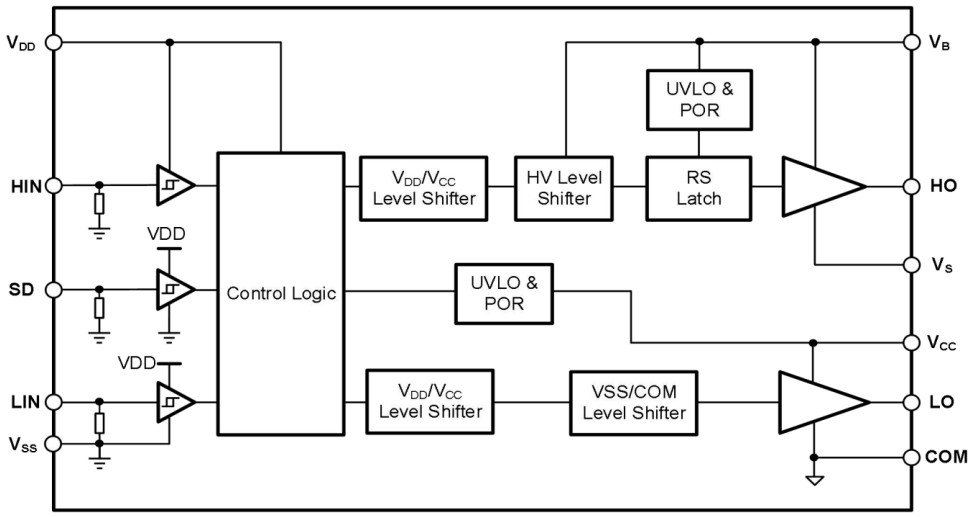

Figure9-1 Function Block Diagram of UMW IR2110STR

11.Application message

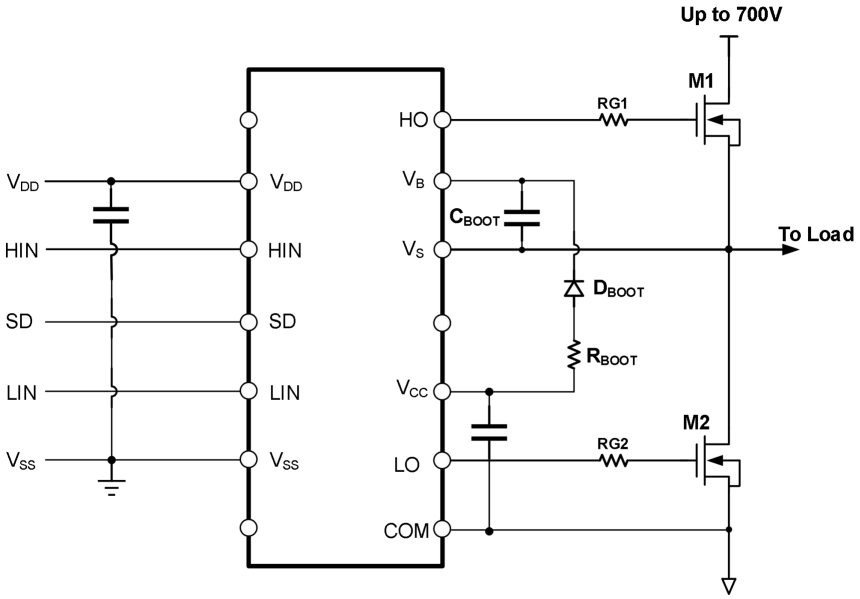

Figure9-2 Typical application circuit of UMW UMW IR2110STR

12.SOP-16-300mil Package Outline Dimensions

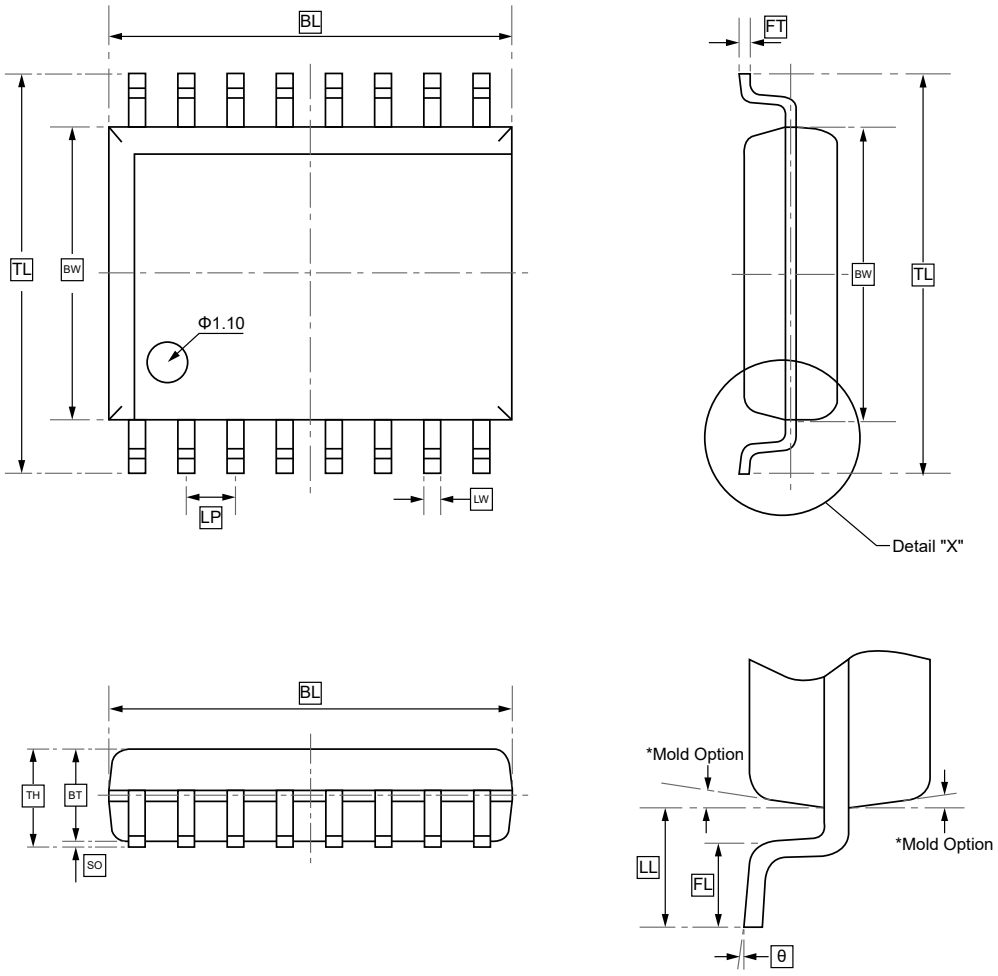

DIMENSIONS (mm are the original dimensions)

Symbol	BL	BW	TL	LW	LP	FT	BT	SO	TH	LL	FL	θ
Min	10.20	7.30	10.10	0.400	1.270	0.170	2.24	0.100	2.590	1.30	0.60	0°
Max	10.45	7.70	10.50	TYP	TYP	0.300	2.44	0.250	Max.	1.50	1.00	8°

13.Ordering information



yy: Year Code
ww: Week Code

Order Code	Package	Base QTY	Delivery Mode
UMW IR2110STR	SOP-16-300mil	2500	Tape and reel

14.Disclaimer

UMW reserves the right to make changes to all products, specifications. Customers should obtain the latest version of product documentation and verify the completeness and currency of the information before placing an order.

When applying our products, please do not exceed the maximum rated values, as this may affect the reliability of the entire system. Under certain conditions, any semiconductor product may experience faults or failures. Buyers are responsible for adhering to safety standards and implementing safety measures during system design, prototyping, and manufacturing when using our products to prevent potential failure risks that could lead to personal injury or property damage.

Unless explicitly stated in writing, UMW products are not intended for use in medical, life-saving, or life-sustaining applications, nor for any other applications where product failure could result in personal injury or death. If customers use or sell the product for such applications without explicit authorization, they assume all associated risks.

When reselling, applying, or exporting, please comply with export control laws and regulations of China, the United States, the United Kingdom, the European Union, and other relevant countries, regions, and international organizations.

This document and any actions by UMW do not grant any intellectual property rights, whether express or implied, by estoppel or otherwise. The product names and marks mentioned herein may be trademarks of their respective owners.