UMW IRF2804PBF

40V N-Channel MOSFET

1.Features

- $V_{DS(V)}$=40V
- I_D=75A
- $R_{DS(ON)}$<2mΩ(V_{GS}=10V)
- $R_{DS(ON)}$<2.3mΩ(V_{GS}=4.5V)

2.Pinning information

Pin	Symbol	Description
1	G	GATE
2	D	DRAIN
3	S	SOURCE

TO-220

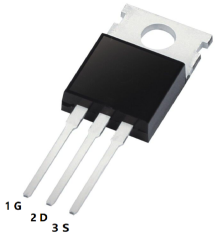

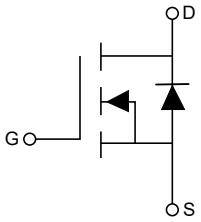

3.Absolute Maximum Ratings

Parameter		Symbol	Rating	Units
Continuous Drain Current, V_{GS}=10V(Silicon Limited	T_C=25°C	I_D	270	A
Continuous Drain Current, V_{GS}=10V(See Fig. 9)	T_C=100°C		190	A
Continuous Drain Current, V_{GS}=10V(Package Limited)	T_C=25°C		75	A
Pulsed Drain Current ①		I_{DM}	1080	A
Maximum Power Dissipation	T_C=25°C	P_D	300	W
Linear Derating Factor			2	W/°C
Gate-to-Source Voltage		V_{GS}	±20	V
Single Pulse Avalanche Energy (Thermally Limited) ②		E_{AS}	540	mJ
Single Pulse Avalanche Energy Tested Value ⑦		$E_{AS(tested)}$	1160	mJ
Avalanche Current ①		I_{AR}	See Fig.14a,	A
Repetitive Avalanche Energy ⑥		E_{AR}	14b,16,17	mJ
Storage Temperature Range		T_J, T_{STG}	-55 to 175	°C
Soldering Temperature, for 10 seconds			300(1.6mm from case)	°C
Mounting torque, 6-32 or M3 screw			10 lbf•in (1.1N•m)	

4.Thermal resistance rating

Parameter	Symbol	Typ	Max	Units
Junction-to-Case	$R_{\theta JC}$		0.5⑩	°C/W
Case-to-Sink, Flat Greased Surface	$R_{\theta CS}$	0.5		°C/W
Junction-to-Ambient	$R_{\theta JA}$		62	°C/W
Junction-to-Ambient (PCB Mount, steady state) ⑧	$R_{\theta JA}$		40	°C/W

5.Electrical Characteristics @ T_J= 25°C (unless otherwise specified)

Parameter	Symbol	Conditions	Min	Typ	Max	Units
Drain-to-Source Breakdown Voltage	$V_{(BR)DSS}$	I_D=250μA, V_{GS}=0V	40			V
Breakdown Voltage Temp. Coefficient	$\Delta V_{(BR)DSS}/\Delta T_J$	I_D=1mA,Reference to 25°C		0.031		V/°C
Static Drain-to-Source On-Resistance	$R_{DS(ON)}$	V_{GS}=10V, I_D=75A ④		1.5	2	mΩ
Static Drain-to-Source On-Resistance	$R_{DS(ON)}$	V_{GS}=10V, I_D=75A ④		1.8	2.3	mΩ
Gate Threshold Voltage	$V_{GS(th)}$	V_{DS}=V_{GS}, I_D=250μA	2		4	V
Forward Transconductance	g_{FS}	V_{DS}=10V, I_D=75A	130			S
Drain-to-Source Leakage Current	I_{DSS}	V_{DS}=40V, V_{GS}=0V			20	μA
		V_{DS}=40V, V_{GS}=0V, T_J=125°C			250	μA
Gate-to-Source Forward Leakage	I_{GSS}	V_{GS}=20V			200	nA
Gate-to-Source Reverse Leakage		V_{GS}=-20V			-200	nA
Total Gate Charge	Q_g	I_D=75A, V_{DS}=32V, V_{GS}=10V④		160	240	nC
Gate-to-Source Charge	Q_{gs}			41	62	nC
Gate-to-Drain ("Miller") Charge	Q_{gd}			66	99	nC
Tum-On Delay Time	$t_{D(on)}$	V_{DD}=20V, I_D=75A R_G=2.5Ω, V_{GS}=10V④		13		ns
Rise Time	t_r			120		ns
Turn-Off Delay Time	$t_{D(off)}$			130		ns
Fall Time	t_f			130		ns
Internal Drain Inductance	L_D	Between lead, 6mm (0.25in.) from package and center of die contact		4.5		nH
Internal Source Inductance	L_S			7.5		
Input Capacitance	C_{iss}	V_{GS}=0V, V_{DS}=25V, f=1.0MHz See Fig. 5		6450		pF
Output Capacitance	C_{oss}			1690		pF
Reverse Transfer Capacitance	C_{rss}			840		pF
Output Capacitance	C_{oss}	V_{GS}=0V, V_{DS}=1V, f=1MHz		5350		pF
Output Capacitance	C_{oss}	V_{GS}=0V, V_{DS}=32V, f=1MHz		1520		pF
Effective Output Capacitance	C_{oss}eff.(ER)	V_{GS}=0V, V_{DS}=0V to 32V		2210		pF

Diode Characteristics						
Continuous Source Current (Body Diode)	I_S	MOSFET symbol showing the integral reverse p-n junction diode.			270	A
Pulsed Source Current (Body Diode) ①	I_{SM}				1080	A
Diode Forward Voltage	V_{SD}	T_J=25°C,I_S=75A,V_{GS}=0V ④			1.3	V
Reverse Recovery Time	t_{rr}	T_J=25°C,I_S=75A,V_{DD}=20V di/dt=100A/μs ④		56	84	ns
Reverse Recovery Charge	Q_{rr}			67	100	nC
Forward Turn-On Time	t_{on}	Intrinsic turn-on time is negligible (turn-on is dominated by L_S+L_D)				

Notes:

① Repetitive rating; pulse width limited by max. junction temperature.(See fig. 11).

② Limited by T_{Jmax}, starting T_J=25°C, L=0.24mH, R_G=25Ω, I_{AS}=75A, V_{GS}=10V.Part not recommended for use above this value.

③ I_{SD} ≤75A, di/dt ≤220A/μs, V_{DD} ≤ $V_{(BR)DSS}$, T_J ≤ 175°C.

④ Pulse width ≤ 1ms; duty cycle ≤ 2%.

⑤ C_{oss} eff. is a fixed capacitance that gives the same charging time as C_{oss} while V_{DS} is rising from 0 to 80% V_{DSS}.

⑥ Limited by T_{Jmax} , see Fig.12a, 12b, 15, 16 for typical repetitive avalanche performance.

⑦ This value determined from sample failure population. 100% tested to this value in production.

⑧ This is applied to D^2Pak, when mounted on 1" square PCB (FR-4 or G-10 Material). For recommended footprint and soldering techniques refer to application note #AN-994.

⑨ Max $R_{DS(ON)}$ for D2Pak and TO-262 (SMD) devices.

⑩ TO-220 device will have an Rth value of 0.45°C/W.

6.1Typical Characterisitics

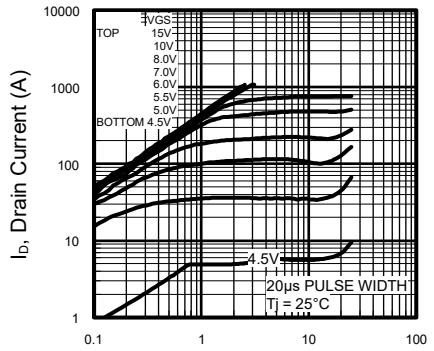

Figure 1: Typical Output Characteristics

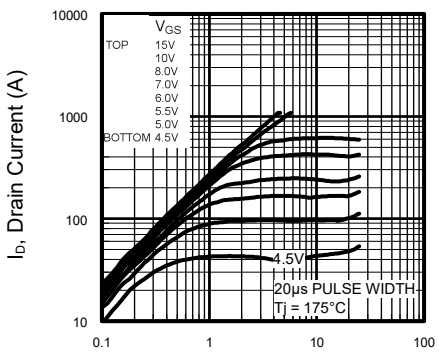

Figure 2: Typical Output Characteristics

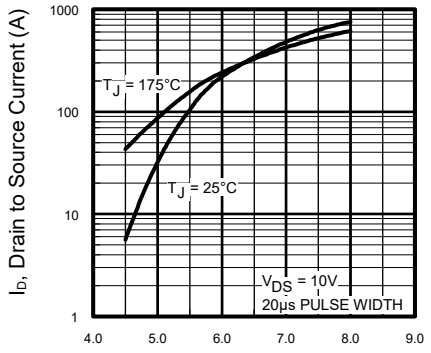

Figure 3: Typical Transfer Characteristics

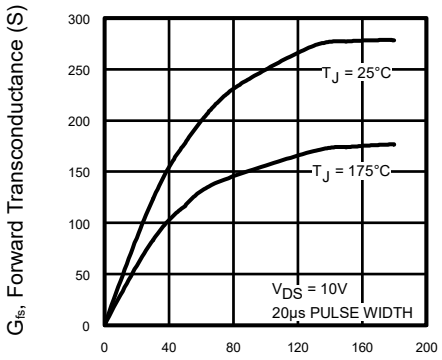

Figure 4: Typical Forward Transconductance vs. Drain Current

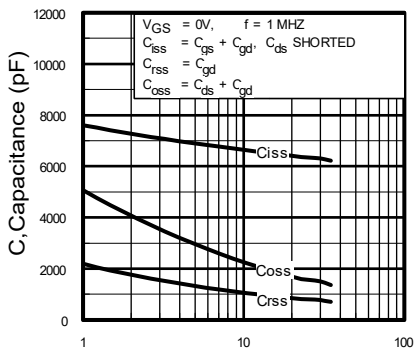

Figure 5: Typical Capacitance vs. Drain-to-Source Voltage

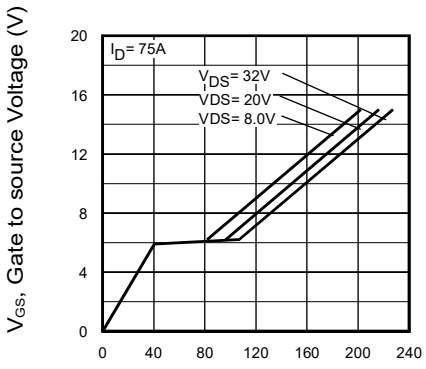

Figure 6: Typical Gate Charge vs. Gate-to-Source Voltage

6.2Typical Characterisitics

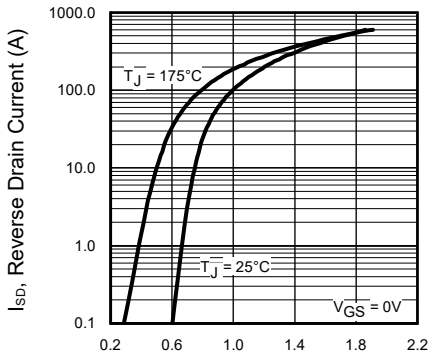

Figure 7: Typical Source-Drain Diode Forward Voltage

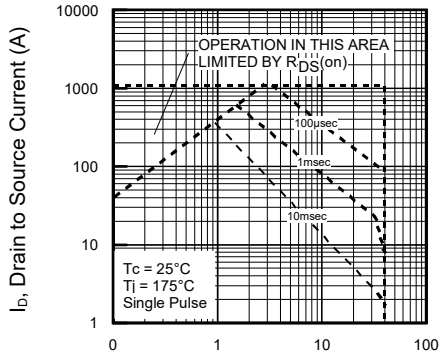

Figure 8: Maximum Safe Operating Area

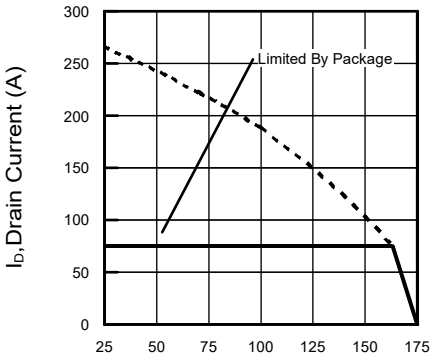

Figure 9: Maximum Drain Current vs. Case Temperature

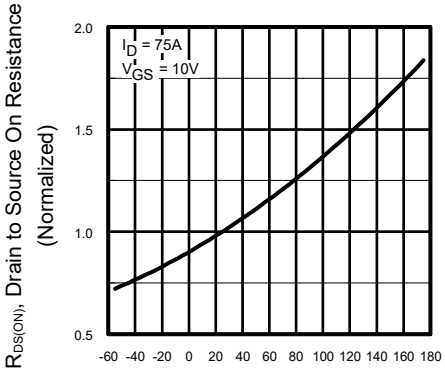

Figure 10: Drain-to-Source Breakdown Voltage

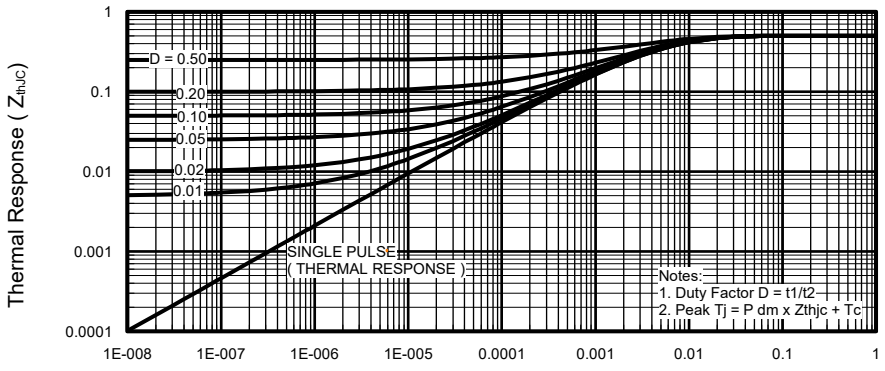

Figure 11: Maximum Effective Transient Thermal Impedance, Junction-to-Case

6.3Typical Characterisitics

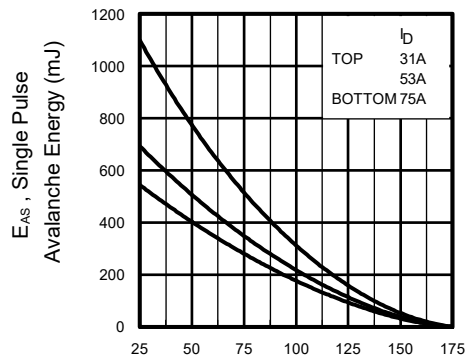

Figure 12: Maximum Avalanche Energy vs. Drain Current

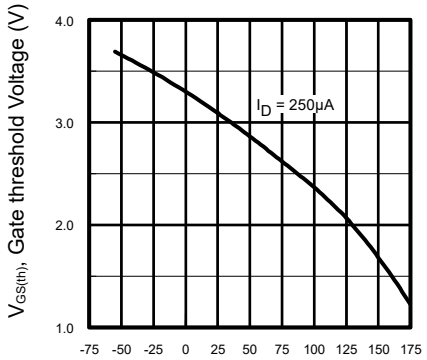

Figure 13:Threshold Voltage vs. Temperature

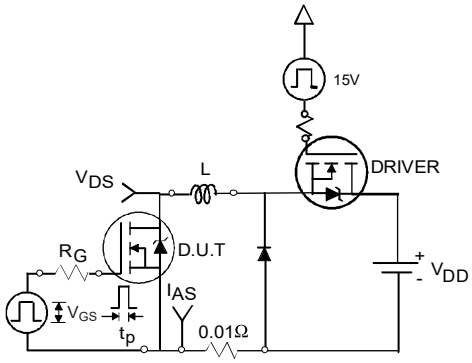

Figure 14a: Unclamped Inductive Test Circuit

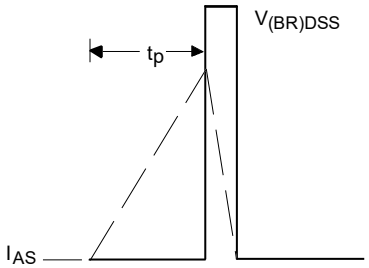

Figure 14b: Unclamped Inductive Waveforms

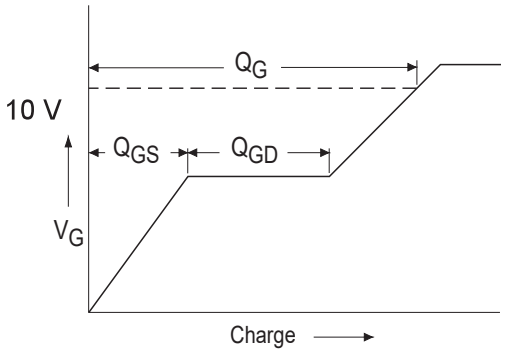

Figure 15a: Basic Gate Charge Waveform

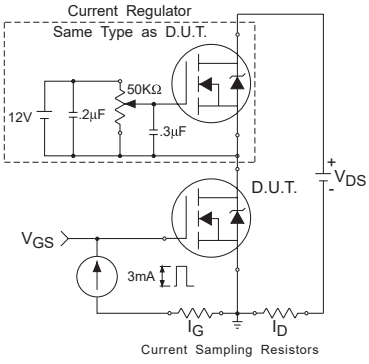

Figure 15b: Gate Charge Test Circuit

6.4Typical Characterisitics

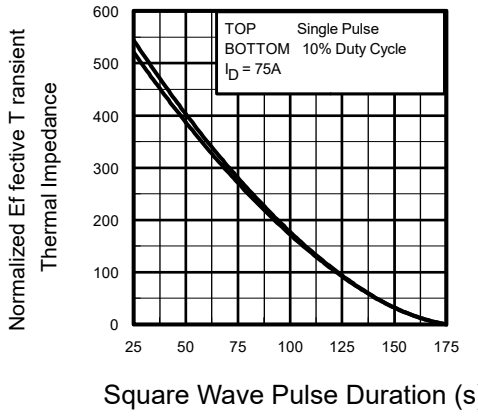

Figure 16: Normalized Thermal Transient Impedance, Junction-to-Ambient

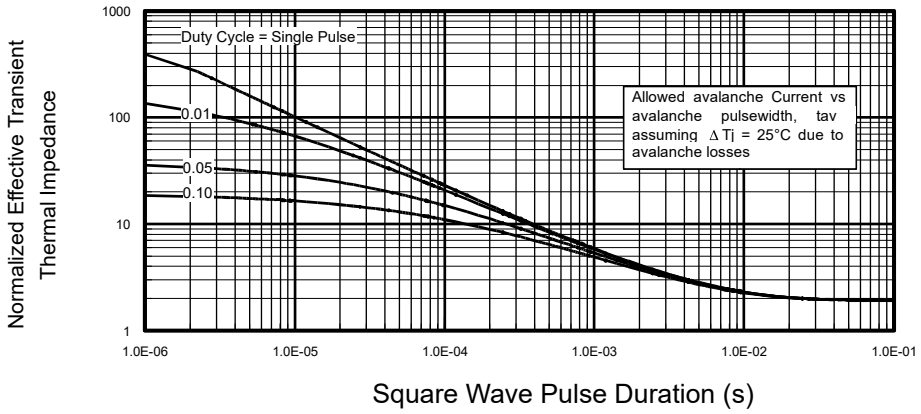

Figure 17: Normalized Thermal Transient Impedance, Junction-to-Case

Notes:

1. Avalanche failures assumption: Purely a thermal phenomenon and failure occurs at a temperature far in excess of T_{jmax}. This is validated for every part type.

2. Safe operation in Avalanche is allowed as long asT_{jmax} is not exceeded.

3. Equation below based on circuit and waveforms shown in Figures 14a, 14b.

4. $P_{D\ (ave)}$ = Average power dissipation per single avalanche pulse.

5. BV = Rated breakdown voltage (1.3 factor accounts for voltage increase during avalanche).

6. I_{av} = Allowable avalanche current.

7. ΔT = Allowable rise in junction temperature, not to exceed

T_{jmax} (assumed as 25°C in Figure 16,17).

t_{av} = Average time in avalanche.

D = Duty cycle in avalanche = tav ·f

$Z_{thJC}(D, t_{av})$ = Transient thermal resistance, see figure 11).

$P_{D\ (ave)} = 1/2\ (1.3 \cdot BV \cdot I_{av}) = \Delta T / Z_{thJC}$

$I_{av} = 2\Delta T / [1.3 \cdot BV \cdot Z_{th}]$

$E_{AS\ (AR)} = P_{D\ (ave)} \cdot t_{av}$

7.1 TO-220 Package Outline Dimensions

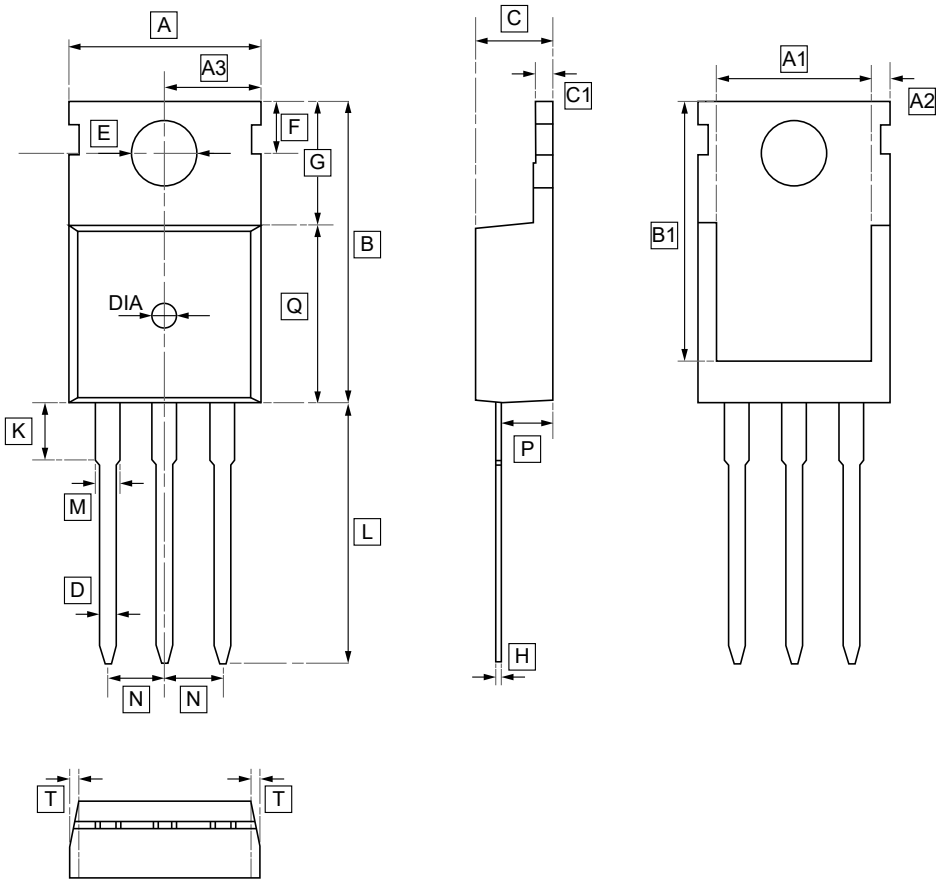

DIMENSIONS (mm are the original dimensions)

Symbol	A	A1	A2	A3	B	B1	C	C1	D	E	F	G
Min	9.7	8.44	1.05	4.8	15.4	12.9	4.28	1.1	0.6	3.4	2.65	5.2
Max	10.3	8.84	1.25	5.2	16.2	13.5	4.68	1.5	1.0	3.8	3.25	5.8

Symbol	H	K	L	L1	M	N	P	Q	T	DIA
Min	0.4	2.9	12.8	2.7	1.15	2.49	2.1	8.7	W:0.35	⊙1.5
Max	0.6	3.3	13.6	3.3	1.35	2.59	2.7	9.3		(deep 0.2)

7.2 TO-220 Package Outline Dimensions

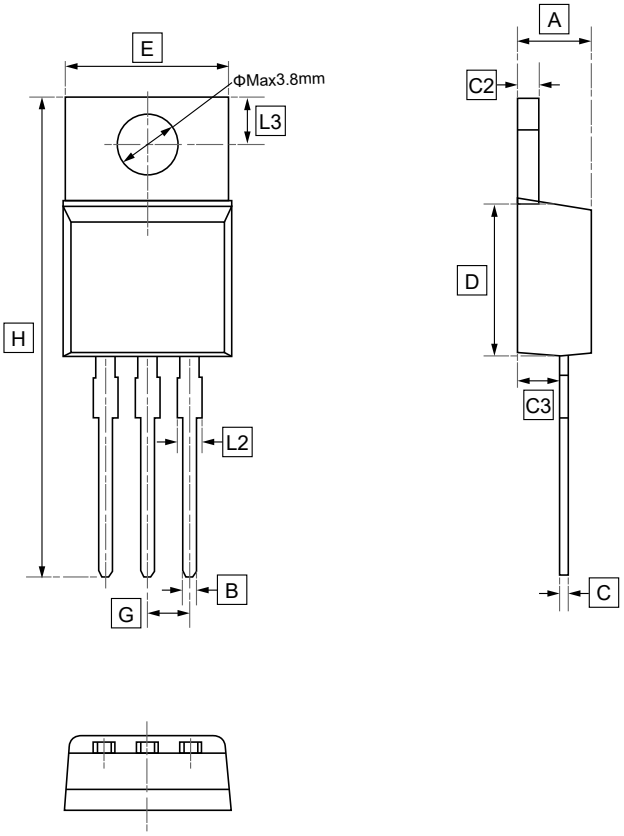

DIMENSIONS (mm are the original dimensions)

Symbol	A	B	C	C2	C3	D	E	G	H	L2	L3
Min	4.30	0.60	0.28	1.17	2.30	8.80	9.80	2.44	28.55	1.10	2.59
Max	4.70	1.00	0.48	1.37	2.70	9.20	10.20	2.64	29.15	1.50	2.89

8.Ordering Information

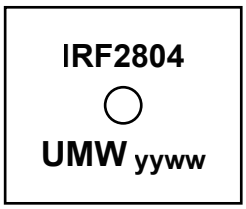

yy: Year Code
ww: Week Code

Order Code	Package	Base QTY	Delivery Mode
UMW IRF2804PBF	TO-220	1000	Tube and box

9.Disclaimer

UMW reserves the right to make changes to all products, specifications. Customers should obtain the latest version of product documentation and verify the completeness and currency of the information before placing an order.

When applying our products, please do not exceed the maximum rated values, as this may affect the reliability of the entire system. Under certain conditions, any semiconductor product may experience faults or failures. Buyers are responsible for adhering to safety standards and implementing safety measures during system design, prototyping, and manufacturing when using our products to prevent potential failure risks that could lead to personal injury or property damage.

Unless explicitly stated in writing, UMW products are not intended for use in medical, life-saving, or life-sustaining applications, nor for any other applications where product failure could result in personal injury or death. If customers use or sell the product for such applications without explicit authorization, they assume all associated risks.

When reselling, applying, or exporting, please comply with export control laws and regulations of China, the United States, the United Kingdom, the European Union, and other relevant countries, regions, and international organizations.

This document and any actions by UMW do not grant any intellectual property rights, whether express or implied, by estoppel or otherwise. The product names and marks mentioned herein may be trademarks of their respective owners.