UMW IRFZ44N

60V N-Channel MOSFET

1.Description

The IRFZ44NS/IRFZ44N uses advanced trench technology and design to provide excellent $R_{DS(ON)}$ with low gate charge.It can be used in a wide variety of applications.

2.Features

- $V_{DS\ (V)}$=60V
- I_D=50A
- $R_{DS(ON)}$<12mΩ(V_{GS}=10V)
- $R_{DS(ON)}$<16mΩ(V_{GS}=4.5V)

3.Pinning information

Pin	Symbol	Description
1	G	GATE
2	D	DRAIN
3	S	SOURCE

TO-220

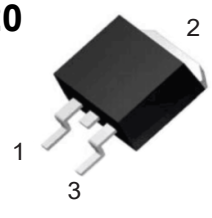

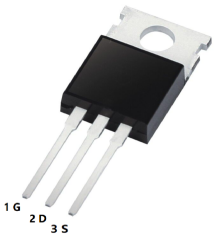

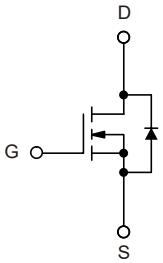

4.Absolute Maximum Ratings T_A= 25°C

Parameter		Symbol	Rating	Units
Drain-Source Voltage		V_{DS}	60	V
Gate-Source Voltage		V_{GS}	±20	
Drain Current-Continuous[Note3]	T_C=25°C	I_D	50	A
	T_C=100°C		33	
Drain Current-Pulsed[Note1]		I_{DM}	200	
Avalanche Energy[Note4]		E_{AS}	64	mJ
Maximum Power Dissipation	T_C=25°C	P_D	105	W
Storage Temperature Range		T_{STG}	-55 to 150	°C
Operating Junction Temperature Range		T_J	-55 to 150	°C

5.Thermal Resistance Rating

Parameter	Symbol	Typ	Max	Units
Thermal Resistance,Junction-to-Case	$R_{\theta JC}$		1.4	°C/W

6.Electrical Characteristics (T_J= 25°C, unless otherwise noted)

Parameter	Symbol	Conditions	Min	Typ	Max	Units
OFF CHARACTERISTICS						
Drain-Source Breakdown Voltage	BV_{DSS}	V_{GS}=0V, I_{DS}=250μA	60			V
Zero Gate Voltage Drain Current	I_{DSS}	V_{DS}=60V, V_{GS}=0V			1	μA
Gate-Body Leakage	I_{GSS}	V_{GS}=±20V, V_{DS}=0V			±100	nA
ON CHARACTERISTIC						
Gate Threshold Voltage	$V_{GS(th)}$	V_{DS}=V_{GS}, I_{DS}=250μA	1	1.6	2.5	V
Drain-Source On-State Resistance	$R_{DS(ON)}$	V_{GS}=10V, I_{DS}=30A		12	17	mΩ
		V_{GS}=4.5V, I_{DS}=20A		16	21	mΩ
DYNAMIC CHARACTERISTICS						
Input Capacitance	C_{iss}	V_{DS}=25V, V_{GS}=0V, f=1MHz		2928		pF
Output Capacitance	C_{oss}			141		pF
Reverse Transfer Capacitance	C_{rss}			120		pF
SWITCHING CHARACTERISTICS						
Turn-On Delay Time	$t_{D(on)}$	V_{GS}=10V, V_{DS}=30V R_{GEN}=1.8Ω, I_D=25A		7.5		ns
Rise Time	t_r			6		ns
Turn-Off Delay Time	$t_{D(off)}$			28.4		ns
Fall Time	t_f			5.5		ns
Total Gate Charge at 10V	Q_g	V_{DS}=30V, I_{DS}=25A, V_{GS}=10V		50		nC
Gate to Source Gate Charge	Q_{gs}			6		nC
Gate to Drain“Miller”Charge	Q_{gd}			15		nC

DRAIN-SOURCE DIODE CHARACTERISTICS AND MAXIMUM RATINGS						
Drain-Source Diode Forward Voltage	V_{SD}	V_{GS}=0V, I_{DS}=30A			1.2	V
Reverse Recovery Time	t_{rr}	T_J=25°C, I_F=25A		29		nS
Reverse Recovery Charge	Q_{rr}	dI/dt=100A/μs		42		uC

Notes:

1: Repetitive rating, pulse width limited by maximum junction temperature.

2: Surface mounted on FR4 Board, t≤10sec.

3: Pulse width ≤ 300μs, duty cycle ≤ 2%.

4: E_{AS} condition: L=0.5mH,V_{DD}=10V, V_G=10V, V_{GATE}=20V,Start T_J=25°C.

7.1Typical Characterisitics

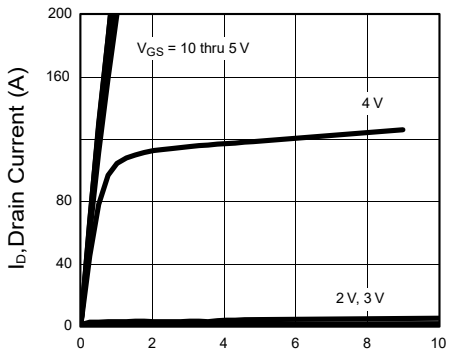

Figure 1: Output Characteristics

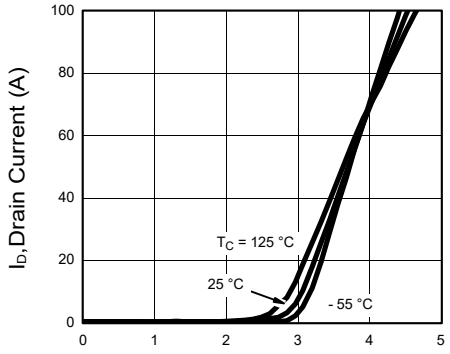

Figure 2: Transfer Characteristics

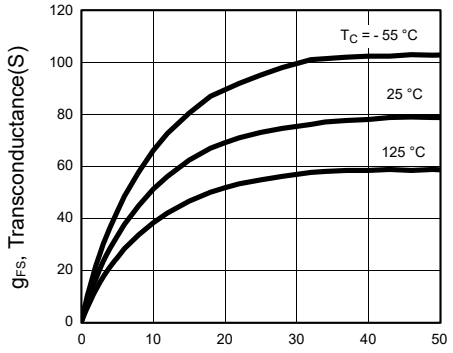

Figure 3: Transconductance

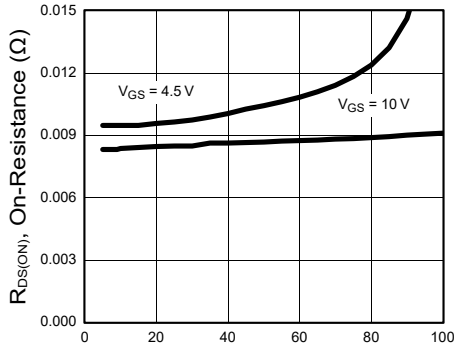

Figure 4: $R_{DS(ON)}$ vs. Drain Current

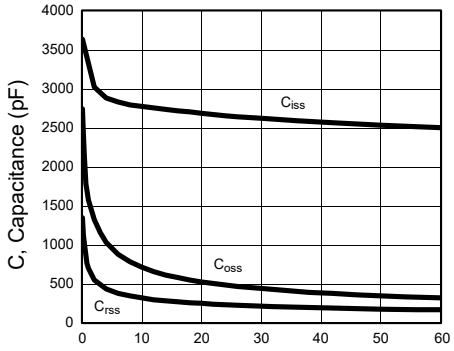

Figure 5: Capacitance

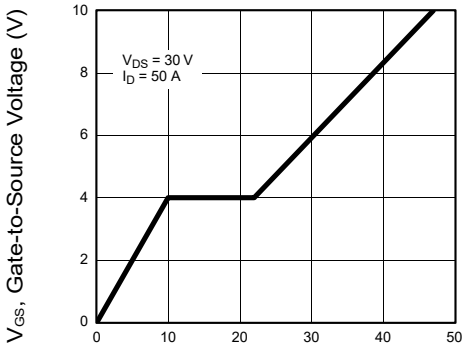

Figure 6: Gate Charge

7.2Typical Characterisitics

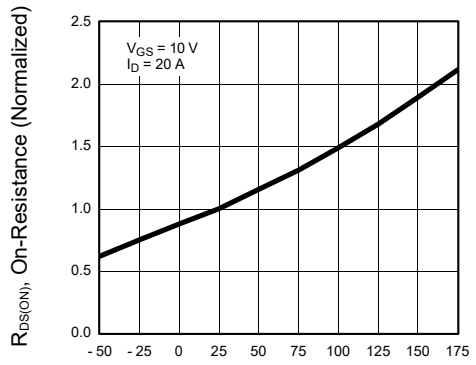

Figure 7: On-Resistance vs. Junction Temperature

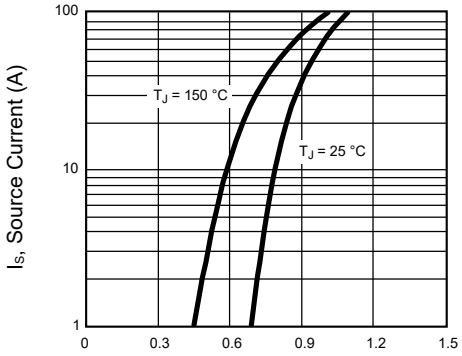

Figure 8: Source-Drain Diode Forward Voltage

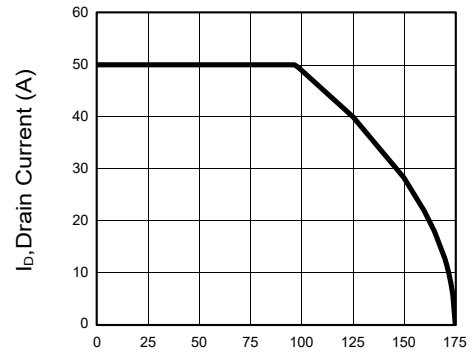

Figure 9: Maximum Drain Current vs. Ambient Temperature

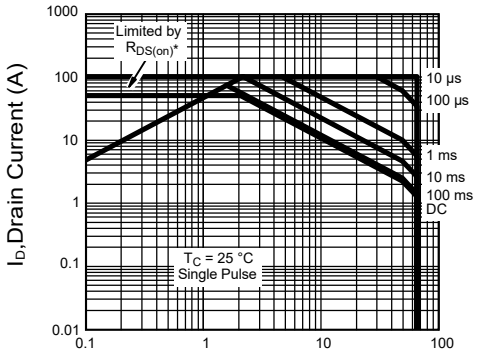

Figure 10: Safe Operating Area

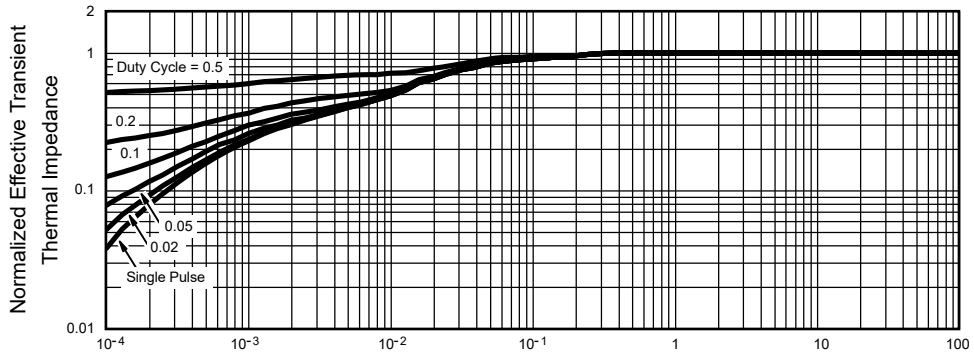

Figure 11: Normalized Thermal Transient Impedance, Junction-to-Case

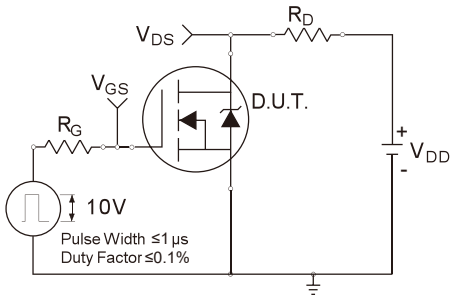

Figure 1: Switching Time Test Circuit

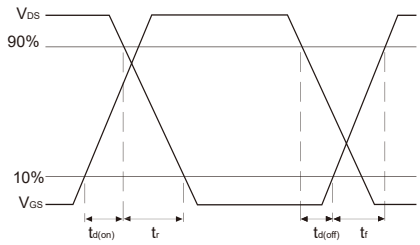

Figure 2: Switching Time Wavefomms

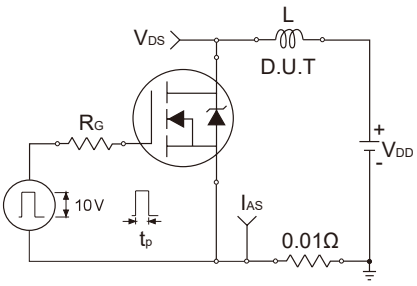

Figure 3: Unclamped Inductive Test Circuit

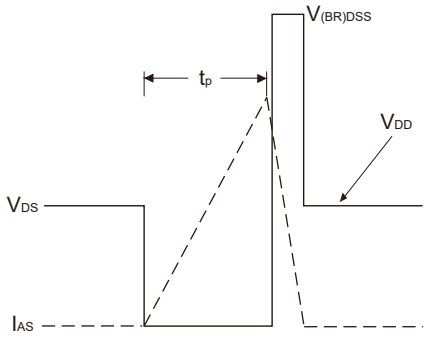

Figure 4: Unclamped Inductive Wavefomms

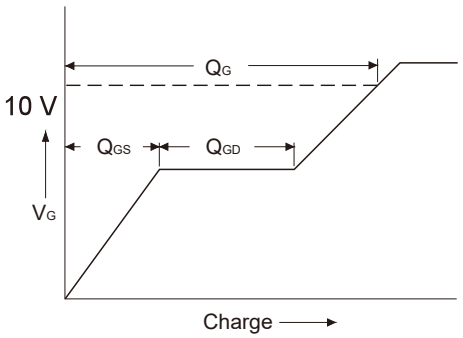

Figure 5: Basic Gate Charge Waveform

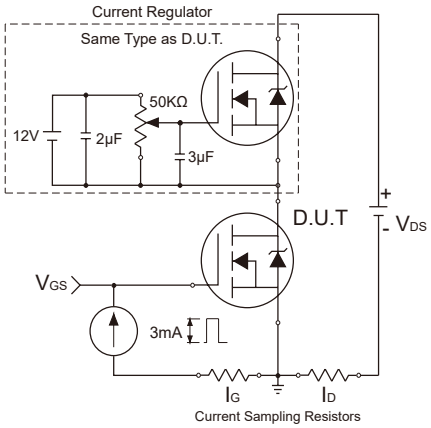

Figure 6: Gate Charge Test Circuit

8.1 TO-263 Package Outline Dimensions

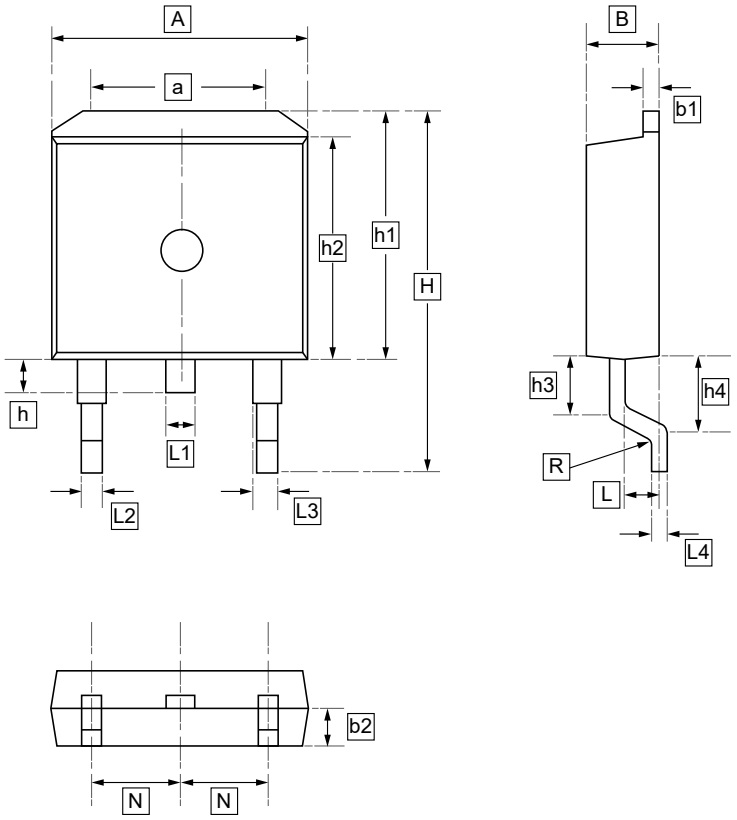

DIMENSIONS (mm are the original dimensions)

Symbol	A	a	B	b1	b2	H	h	h1	h2	h3	h4	L	L1	L2	L3
Min	9.6	7.2	4.3	1.25	2.2	15.2	1.34	10.3	9.1	1.34	2.5	2.2	1.2	0.7	1.2
Max	10.0	7.6	4.7	1.35	2.6	15.8	1.74	10.7	9.3	1.74	2.9	2.6	1.4	0.9	1.4

Symbol	L4	N	R
Min	0.4	2.4	0.45
Max	0.6	2.5	0.55

8.2 TO-220 Package Outline Dimensions

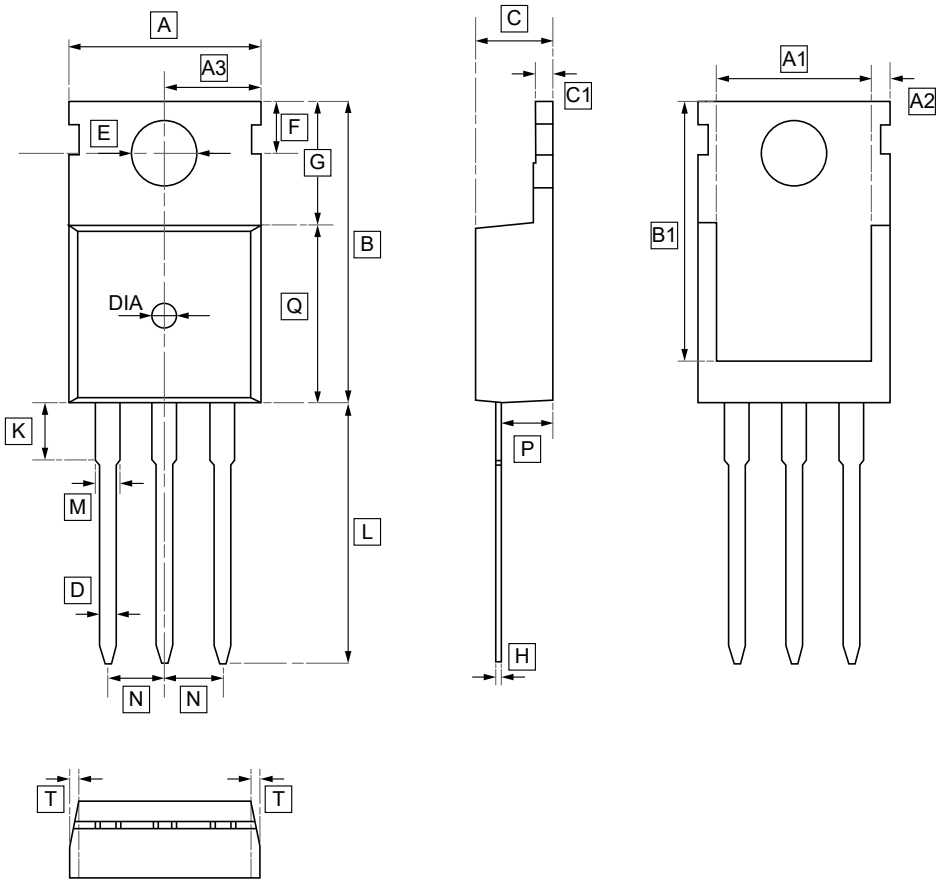

DIMENSIONS (mm are the original dimensions)

Symbol	A	A1	A2	A3	B	B1	C	C1	D	E	F	G
Min	9.7	8.44	1.05	4.8	15.4	12.9	4.28	1.1	0.6	3.4	2.65	5.2
Max	10.3	8.84	1.25	5.2	16.2	13.5	4.68	1.5	1.0	3.8	3.25	5.8

Symbol	H	K	L	L1	M	N	P	Q	T	DIA
Min	0.4	2.9	12.8	2.7	1.15	2.49	2.1	8.7	W:0.35	⊙1.5
Max	0.6	3.3	13.6	3.3	1.35	2.59	2.7	9.3		(deep 0.2)

8.3 TO-220 Package Outline Dimensions

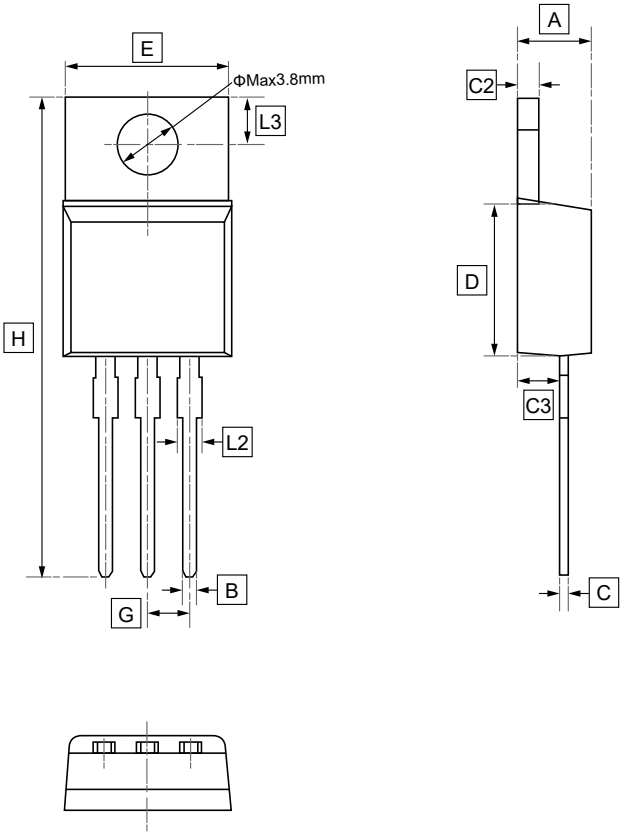

DIMENSIONS (mm are the original dimensions)

Symbol	A	B	C	C2	C3	D	E	G	H	L2	L3
Min	4.30	0.60	0.28	1.17	2.30	8.80	9.80	2.44	28.55	1.10	2.59
Max	4.70	1.00	0.48	1.37	2.70	9.20	10.20	2.64	29.15	1.50	2.89

10.Ordering information

TO-263

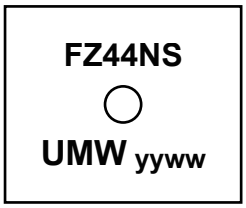

TO-220

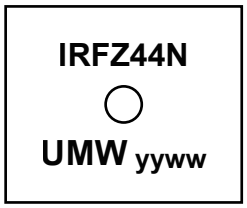

yy: Year Code
ww: Week Code

Order Code	Marking	Package	Base QTY	Delivery Mode
UMW IRFZ44NS	FZ44NS	TO-263	800	Tape and reel
UMW IRFZ44N	IRFZ44N	TO-220	1000	Tube and box

11.Disclaimer

UMW reserves the right to make changes to all products, specifications. Customers should obtain the latest version of product documentation and verify the completeness and currency of the information before placing an order.

When applying our products, please do not exceed the maximum rated values, as this may affect the reliability of the entire system. Under certain conditions, any semiconductor product may experience faults or failures. Buyers are responsible for adhering to safety standards and implementing safety measures during system design, prototyping, and manufacturing when using our products to prevent potential failure risks that could lead to personal injury or property damage.

Unless explicitly stated in writing, UMW products are not intended for use in medical, life-saving, or life-sustaining applications, nor for any other applications where product failure could result in personal injury or death. If customers use or sell the product for such applications without explicit authorization, they assume all associated risks.

When reselling, applying, or exporting, please comply with export control laws and regulations of China, the United States, the United Kingdom, the European Union, and other relevant countries, regions, and international organizations.

This document and any actions by UMW do not grant any intellectual property rights, whether express or implied, by estoppel or otherwise. The product names and marks mentioned herein may be trademarks of their respective owners.