UMW IRL540N

100V N-Channel MOSFET

1.Description

The UMW IRL540N uses advanced trench technology and design to provide excellent $R_{DS(ON)}$ with low gate charge.It can be used in a wide variety of applications.

2.1Features

- $V_{DS\ (V)}$=100V
- I_D=30A
- $R_{DS(ON)}$<28mΩ(V_{GS}=10V) (Typ:24 mΩ)

2.2Features

- Special process technology for high ESD capability
- High density cell design for ultra low Rdson
- Fully characterized avalanche voltage and current
- Good stability and uniformity with high E_{AS}
- Excellent package for good heat dissipation

3.Pinning information

Pin	Symbol	Description
1	G	GATE
2	D	DRAIN
3	S	SOURCE

TO-220-3L

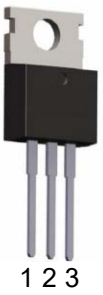

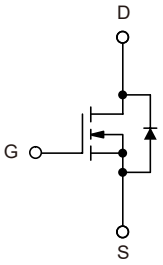

4.Absolute Maximum Ratings T_C= 25°C

Parameter	Symbol	Rating	Units
Drain-Source Voltage	V_{DS}	100	V
Gate-Source Voltage	V_{GS}	±20	
Drain Current-Continuous	I_D	30	A
Drain Current-Continuous (T_C=100°C)	I_D(100°C)	21	
Pulsed Drain Current	I_{DM}	70	
Maximum Power Dissipation		75	W
Derating factor	P_D	0.5	W/°C
Single pulse avalanche energy (Note 5)	E_{AS}	256	mJ
Storage Temperature Range	T_{STG}, T_J	-55 to 175	°C

5.Thermal Resistance Rating

Parameter	Symbol	Typ	Max	Units
Thermal Resistance,Junction-to-Case (Note 2)	$R_{\theta JC}$		2	°C/W

6.SPECIFICATIONS (T_C= 25°C, unless otherwise noted)

Parameter	Symbol	Conditions	Min	Typ	Max	Units
OFF CHARACTERISTICS						
Drain-Source Breakdown Voltage	BV_{DSS}	V_{GS}=0V, I_{DS}=250μA	100	110		V
Zero Gate Voltage Drain Current	I_{DSS}	V_{DS}=100V, V_{GS}=0V			1	μA
Gate-Body Leakage	I_{GSS}	V_{GS}=±20V, V_{DS}=0V			±100	nA
ON CHARACTERISTIC (Note 3)						
Gate Threshold Voltage	$V_{GS(th)}$	V_{DS}=V_{GS}, I_{DS}=250μA	2	3	4	V
Drain-Source On-State Resistance	$R_{DS(ON)}$	V_{GS}=10V, I_{DS}=15A		24	28	mΩ
Forward Transconductance	g_{FS}	V_{DS}=5V, I_{DS}=10A		15		S
DYNAMIC CHARACTERISTICS (Note 4)						
Input Capacitance	C_{iss}	V_{DS}=25V, V_{GS}=0V, f=1MHz		2000		pF
Output Capacitance	C_{oss}			300		pF
Reverse Transfer Capacitance	C_{rss}			250		pF
SWITCHING CHARACTERISTICS (Note 4)						
Turn-On Delay Time	$t_{D(on)}$	V_{GS}=50V, R_L=5Ω V_{GS}=10V, R_{GEN}=3Ω		7		ns
Rise Time	t_r			7		ns
Turn-Off Delay Time	$t_{D(off)}$			29		ns
Fall Time	t_f			7		ns
Total Gate Charge	Q_g	V_{DS}=50V, I_D=18A, V_{GS}=10V		39		nC
Gate to Source Gate Charge	Q_{gs}			8		nC
Gate to Drain“Miller”Charge	Q_{gd}			12		nC

DRAIN-SOURCE DIODE CHARACTERISTICS						
Diode Forward Voltage (Note 3)	V_{SD}	V_{GS}=0V, I_S=20A			1.2	V
Diode Forward Current (Note 2)	I_S				30	A
Reverse Recovery Time	t_{rr}	T_J=25°C, I_F=18A		32		ns
Reverse Recovery Charge	Q_{rr}	dI/dt=100A/μs (Note 3)		53		nC
Forward Turn-On Time	t_{on}	Intrinsic turn-on time is negligible (turn-on is dominated by L_S+L_D)				

Notes:

1. Repetitive Rating: Pulse width limited by maximum junction temperature.
2. Surface Mounted on FR4 Board, t ≤ 10 sec.
3. Pulse Test: Pulse Width ≤ 300μs, Duty Cycle ≤ 2%.
4. Guaranteed by design, not subject to production.
5. EAS Condition : T_J=25°C ,V_{DD}=50V, V_G=10V, L=0.5mH,R_g=25Ω, I_{AS}=32A.

7.1 Typical Characterisitics

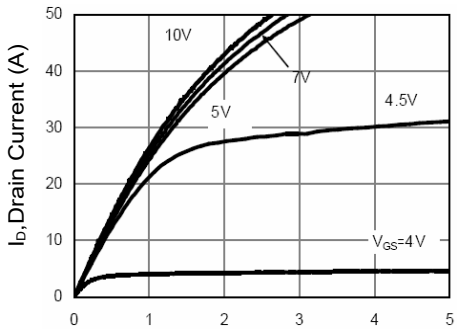

Figure 1: Output Characteristics

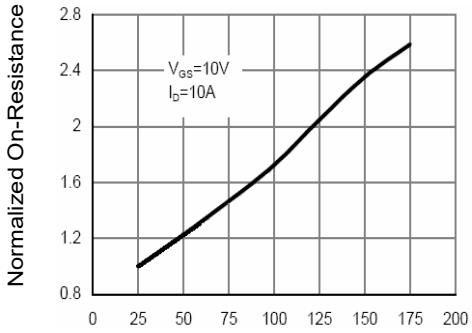

Figure 2: Rdson-JunctionTemperature

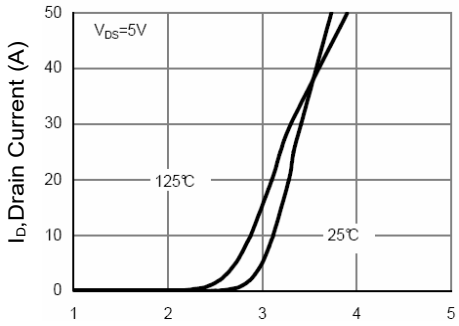

Figure 3:Transfer Characteristics

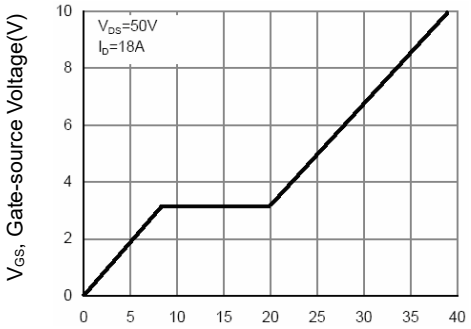

Figure 4: Gate Charge

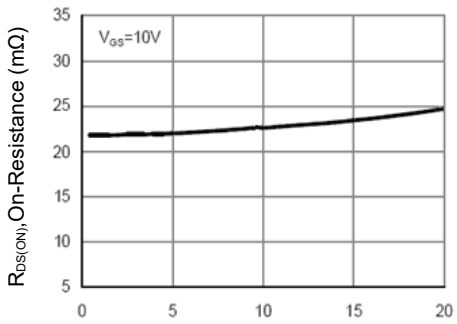

Figure 5: Rdson- Drain Current

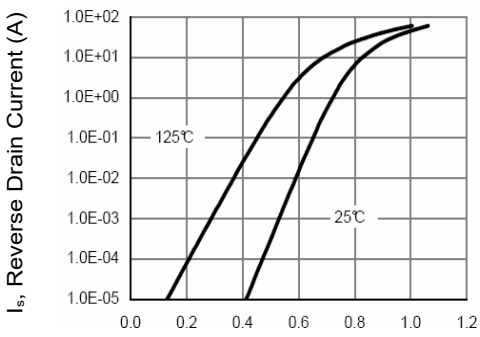

Figure 6: Source- Drain Diode Forward

7.2 Typical Characterisitics

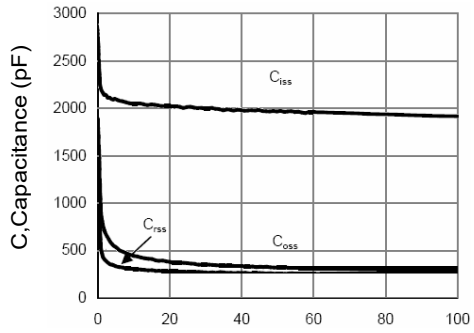

Figure 7: Capacitance vs Vds

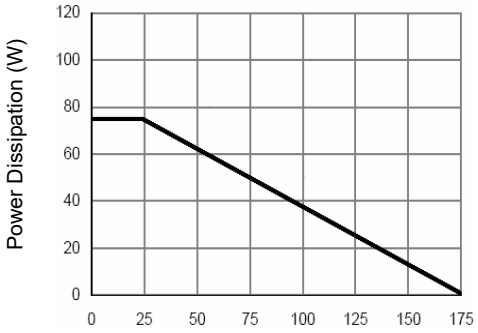

Figure 8: Power De-rating

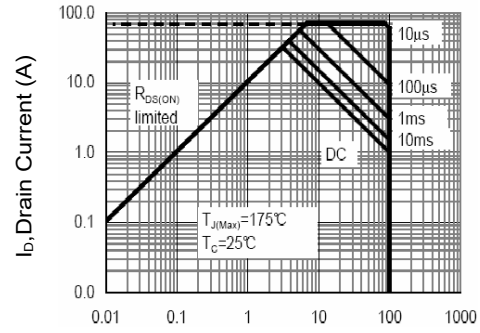

Figure 9: Safe Operation Area

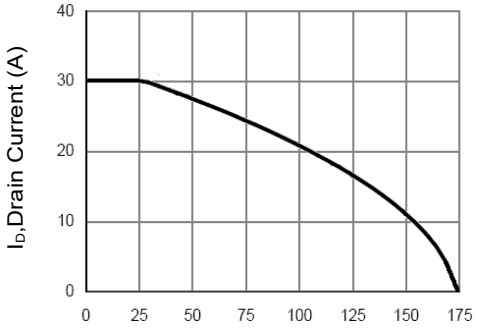

Figure 10: Current- Junction Temperature

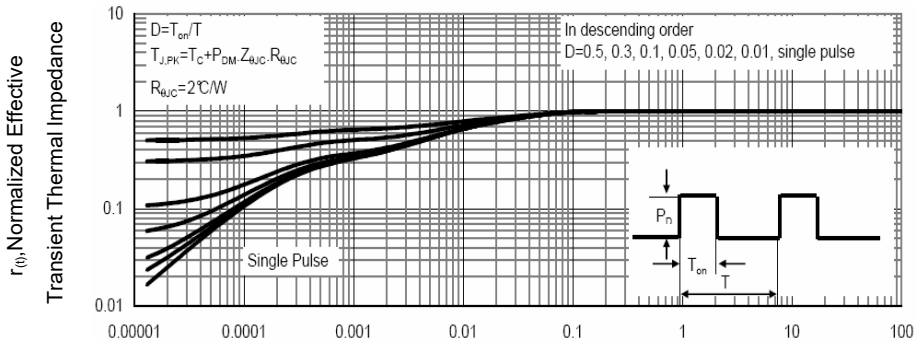

Figure 11: Normalized Thermal Transient Impedance

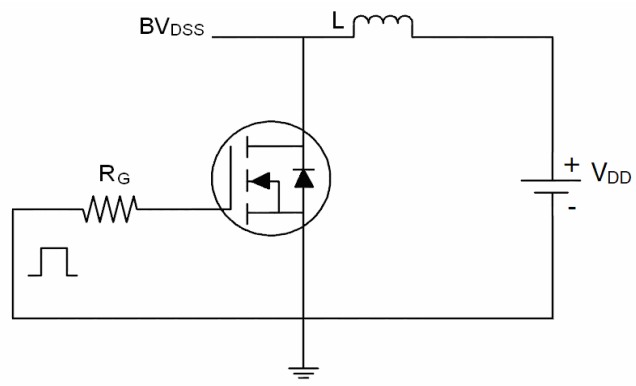

1) E_{AS} Test Circuit

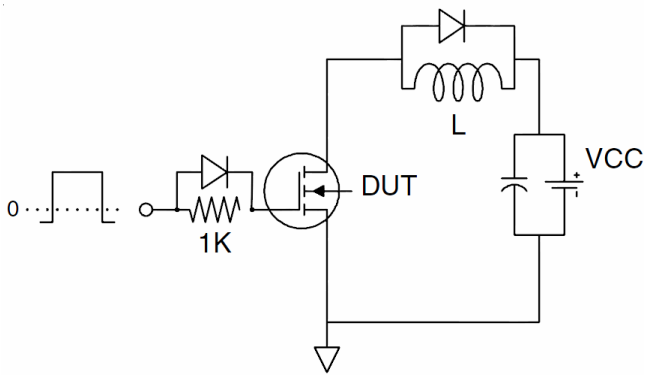

2) Gate Charge Test Circuit

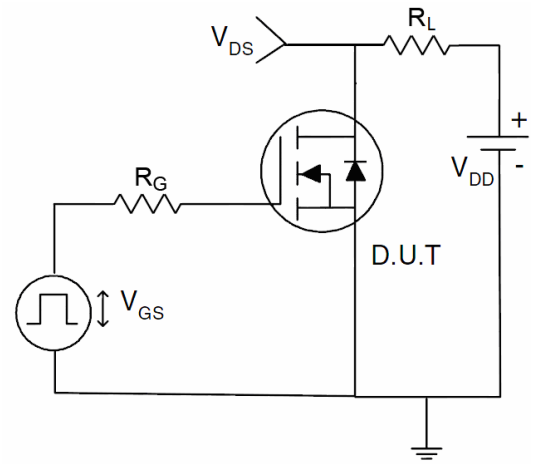

3) Switch Time Test Circuit

8.1 TO-220 Package Outline Dimensions

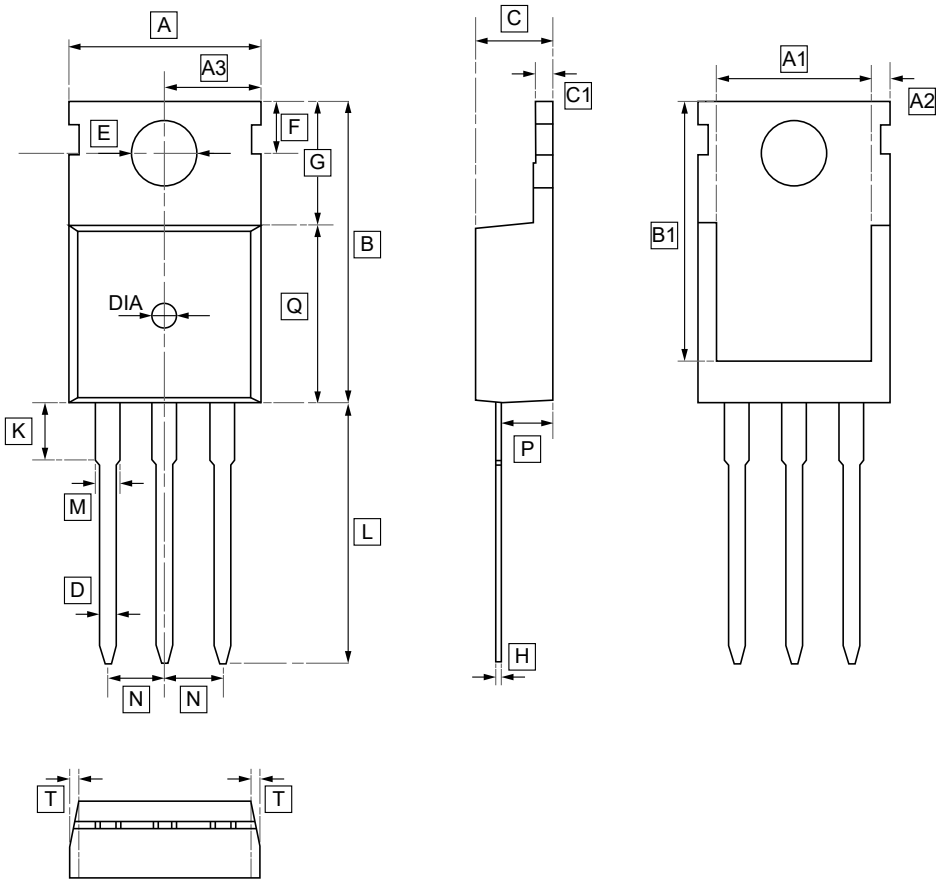

DIMENSIONS (mm are the original dimensions)

Symbol	A	A1	A2	A3	B	B1	C	C1	D	E	F	G
Min	9.7	8.44	1.05	4.8	15.4	12.9	4.28	1.1	0.6	3.4	2.65	5.2
Max	10.3	8.84	1.25	5.2	16.2	13.5	4.68	1.5	1.0	3.8	3.25	5.8

Symbol	H	K	L	L1	M	N	P	Q	T	DIA
Min	0.4	2.9	12.8	2.7	1.15	2.49	2.1	8.7	W:0.35	⊙1.5
Max	0.6	3.3	13.6	3.3	1.35	2.59	2.7	9.3		(deep 0.2)

8.2 TO-220 Package Outline Dimensions

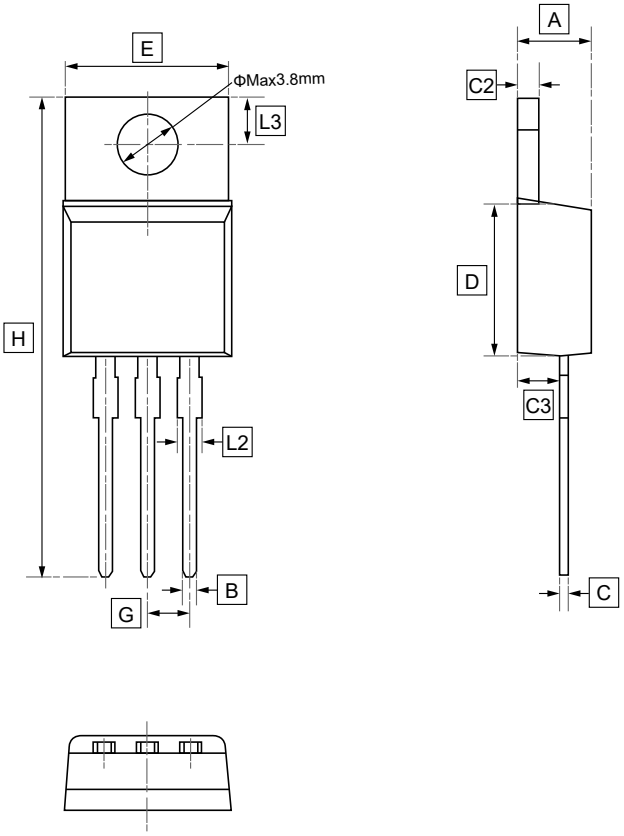

DIMENSIONS (mm are the original dimensions)

Symbol	A	B	C	C2	C3	D	E	G	H	L2	L3
Min	4.30	0.60	0.28	1.17	2.30	8.80	9.80	2.44	28.55	1.10	2.59
Max	4.70	1.00	0.48	1.37	2.70	9.20	10.20	2.64	29.15	1.50	2.89

9.Ordering information

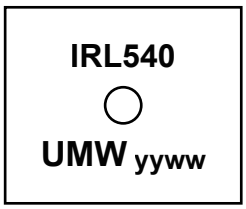

yy: Year Code
ww: Week Code

Order Code	Package	Base QTY	Delivery Mode
UMW IRL540N	TO-220	1000	Tube and box

10.Disclaimer

UMW reserves the right to make changes to all products, specifications. Customers should obtain the latest version of product documentation and verify the completeness and currency of the information before placing an order.

When applying our products, please do not exceed the maximum rated values, as this may affect the reliability of the entire system. Under certain conditions, any semiconductor product may experience faults or failures. Buyers are responsible for adhering to safety standards and implementing safety measures during system design, prototyping, and manufacturing when using our products to prevent potential failure risks that could lead to personal injury or property damage.

Unless explicitly stated in writing, UMW products are not intended for use in medical, life-saving, or life-sustaining applications, nor for any other applications where product failure could result in personal injury or death. If customers use or sell the product for such applications without explicit authorization, they assume all associated risks.

When reselling, applying, or exporting, please comply with export control laws and regulations of China, the United States, the United Kingdom, the European Union, and other relevant countries, regions, and international organizations.

This document and any actions by UMW do not grant any intellectual property rights, whether express or implied, by estoppel or otherwise. The product names and marks mentioned herein may be trademarks of their respective owners.