UMW IRS2008STR

250V Half Bridge MOSFET/IGBT Gate Driver

1.Description

The UMW IRS2008STR is a high voltage, high speed power MOSFET drivers with dependent high- and low-side referenced output channels. Proprietary HVIC and latch immune CMOS technologies enable ruggedized monolithic construction. The logic input is compatible with standard CMOS or LSTTL output, down to 3.3V logic. The output drivers feature a high pulse current buffer stage designed for minimum driver cross-conduction. The floating channel can be used to drive an N-channel power MOSFET in the high-side configuration which operates up to 250V.

2.Applications

- Motor Control
- Air Conditioners/ Washing Machines
- General Purpose Inverters
- Micro/Mini Inverter Drives

3.Features

- Floating channel designed for bootstrap operation
- Fully operational to +250 V
- 3.3V, 5V and 15V input logic compatible
- dV/dt noise Immunity ±50 V/nsec
- Allowable negative Vs capability: -9V
- Gate drive supply range from 10V to 20V
- Undervoltage lockout for both channels
  --UVLO forward 8.9V
  --UVLO reverse 8.2V
- Cross-conduction prevention logic
  --Deadtime 520ns
- Propagation delay
  --Ton/Toff =680ns/150ns
- Wide operating temperature range
  -40°C ~125°C
- Typically output Source/Sink current capability: 290mA/600mA

4.Functional Block Diagram

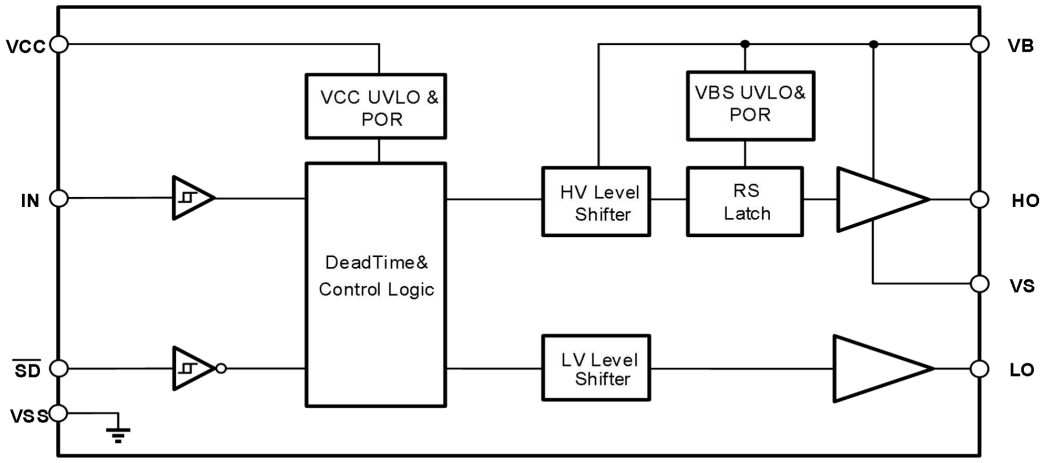

5.Pinning Information

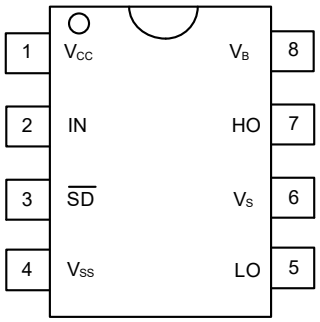

SOP-8

Lead Definitions

Number	Symbol	Description
1	V_{CC}	Low side and logic fixed supply
2	IN	Logic input for high side gate driver output (HO), in phase
3	$\overline{SD}$	Logic input for low side gate driver output (LO), out of phase
4	V_{SS}	Low side return
5	LO	Low side gate drive output
6	V_S	High side floating supply return
7	HO	High side gate drive output
8	V_B	High side floating supply

6.Absolute Maximum Ratings

Exceeding the limit maximum rating may cause permanent damage to the device. All voltage parameters are rated with reference to V_{SS} and an ambient temperature of 25°C.

Parameter	Symbol	Min	Max	Units
High side floating supply	V_B	-0.3	275	V
High side floating supply return	V_S	V_B-25	V_B+0.3	V
High side gate drive output	V_{HO}	V_S-0.3	V_B+0.3	V
Low side and main power supply	V_{CC}	-0.3	25 Note1	V
Low side gate drive output	V_{LO}	-0.3	V_{CC}+0.3	V
Logic input of IN & $\overline{SD}$	V_{IN}	-0.3	V_{CC}+0.3	V
Allowable Offset Supply Voltage Transient	dV_S/dt	-	50	V/ns

7.ESD Rating

Parameter	Symbol	Min	Max	Units
HBM Model	ESD	1500	-	V
Machine Model		500	-	V

8.Rated Power

Parameter	Symbol	Min	Max	Units
Package Power Dissipation @ T_A ≤25°C	PD	-	625	mW

9.Thermal Information

Parameter	Symbol	Min	Max	Units
Thermal Resistance, Junction to Ambient	Rth_{JA}	-	200	°C/W
Junction Temperature	T_J	-	150	°C
Storage Temperature	T_S	-55	150	°C
Lead Temperature (Soldering, 10 seconds)	T_L	-	300	°C

10.Recommended Operating Conditions

For proper operation, the device should be used under the following recommended conditions. The bias ratings of VS and VSS are measured at a supply voltage of 15V, and unless otherwise specified, the ratings of all voltage parameters are referenced to VSS and the ambient temperature is 25°C.

Parameter	Symbol	Min	Max	Units
High side floating supply	V_B	V_S + 10	V_S + 20	V
High side floating supply return	V_S	-9 Note2	250	V
High side gate drive output	V_{HO}	V_S	V_B	V
Low side and main power supply	V_{CC}	10	20	V
Low side gate drive output	V_{LO}	0	V_{CC}	V
Logic input of IN & $\overline{SD}$	V_{IN}	0	V_{CC}	V
Ambient temperature	T_A	-40	125	°C

Note1：All power supplies tested at 25V.

Note2：In order to ensure that the IC works,the range of the VS should be between -8V to 200V.

11.Dynamical Electrical Characteristics

Valid for temperature range at T_A=25°C, V_{CC}=V_B=15V, C_L=1nF, unless otherwise specified.

Parameter	Symbol	Conditions	Min	Typ	Max	Units
Turn-on propagation delay	t_{ON}	V_S=0/250V		680	870	ns
Turn-off propagation delay	t_{OFF}	V_S=0V		150	220	ns
Turn-on rise time	t_R			70	170	ns
Turn-off fall time	t_F			30	90	ns
Deadtime	DT		400	520	650	ns
Matching delay ON and OFF	MT				60	ns
Shutdown delay	t_{SD}	V_S=0V		150	220	ns

12.Static Electrical Characteristics

Valid for temperature range at T_A=25°C, V_{CC}=V_B=15V, C_L=1nF, unless otherwise specified.

Parameter	Symbol	Conditions	Min	Typ	Max	Units
V_{CC} supply UVLO threshold	V_{CCUV+}		8	8.9	9.8	V
	V_{CCUV-}		7.4	8.2	9	V
V_{BS} supply UVLO threshold	V_{BSUV+}		8	8.9	9.8	V
	V_{BSUV-}		7.4	8.2	9	V
High-side floating supply leakage current	I_{LK}	V_B=V_S=250V			50	μA
Quiescent V_B supply current	I_{QBS}			45	70	μA
Quiescent V_{CC} supply current	I_{QCC}			300	520	μA
Logic “1”(IN&$\overline{SD}$) input voltage	V_{IH}	V_{CC}=10V to 20V	2.5			V
Logic “0”(IN&$\overline{SD}$) input voltage	V_{IL}	V_{CC}=10V to 20V			0.8	V
High level output voltage, V_{BIAS} -V_O	V_{OH}	I_O=2mA		0.05	0.2	V
Low level output voltage, V_O	V_{OL}	I_O=2mA		0.02	0.1	V
Logic “1” input bias current	I_{IN+}	V_{IN}=5V		7	15	μA
Logic “0”input bias current	I_{IN-}	V_{IN}=0V		0	1	μA
Output high short circuit pulsed current	I_{O+}	V_O=0V, PW≤10us	200	290		mA
Output low short circuit pulsed current	I_{O-}	V_O=15V, PW≤10us	420	600		mA

13.Function Description

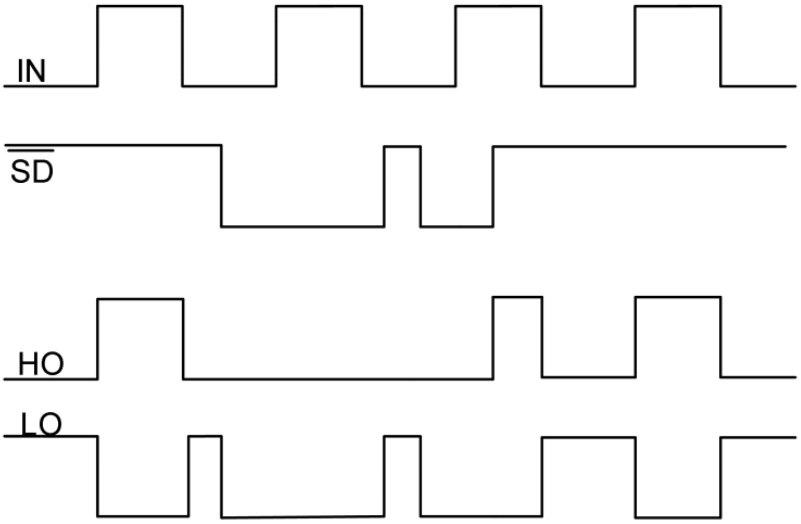

Figure 1. UMW IRS2008STR Input and output timing waveform

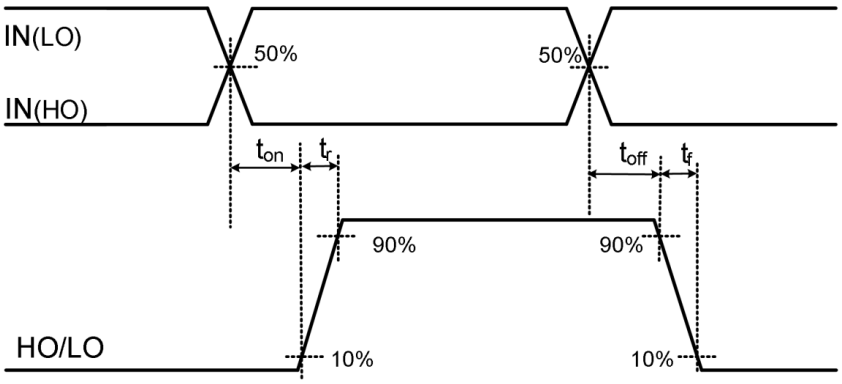

Figure 2. Propagation Time Waveform Definition

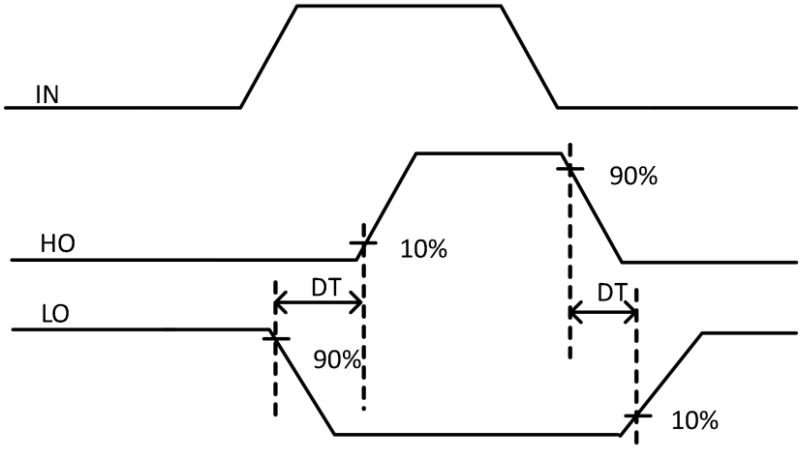

Figure 3. Cross Conduction Prevention Delay Time Waveform Definition

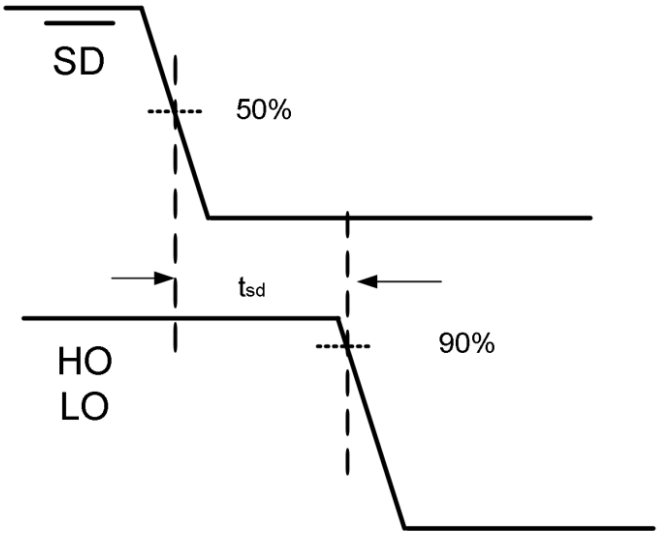

Figure 4. Shutdown Delay Time Waveform Definition

14.Function Block Diagram

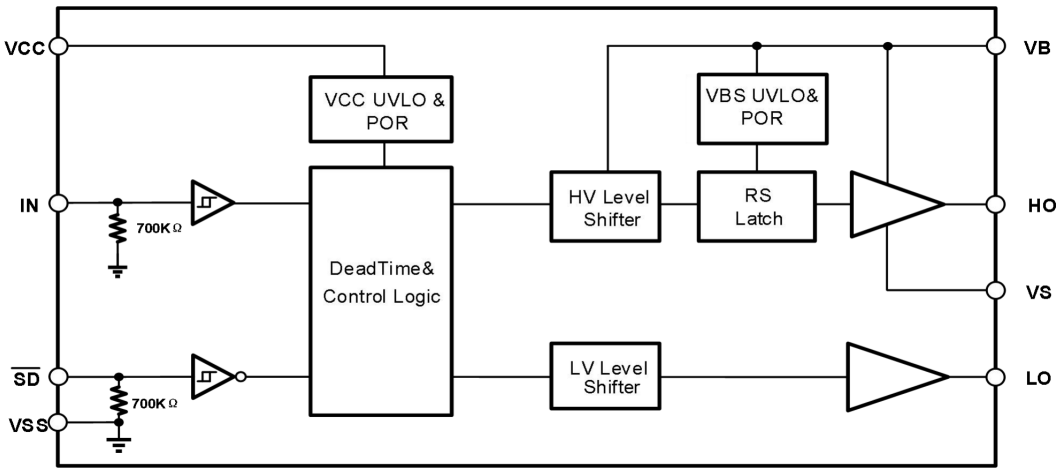

Figure 5. Function Block Diagram of UMW UMW IRS2008STR

15.Application Message

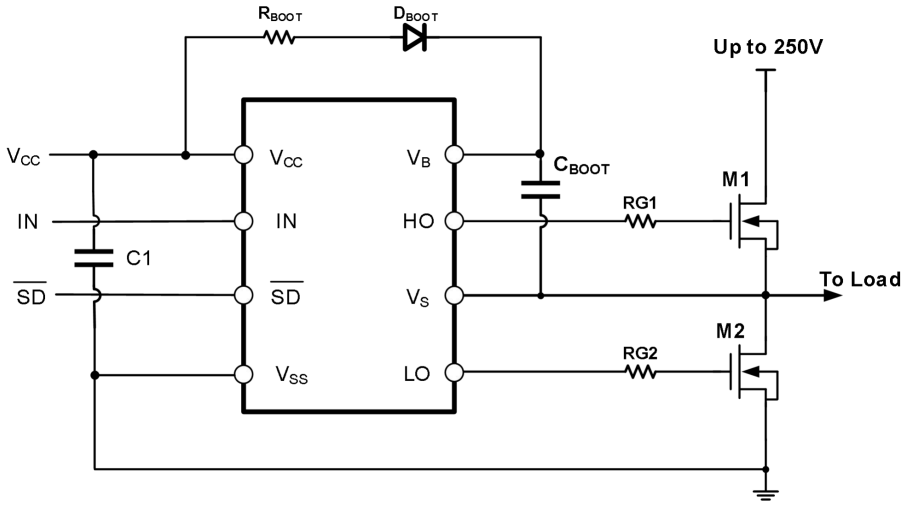

Figure 6. Typical application circuit of UMW IRS2008STR

16.SOP-8 Package Outline Dimensions

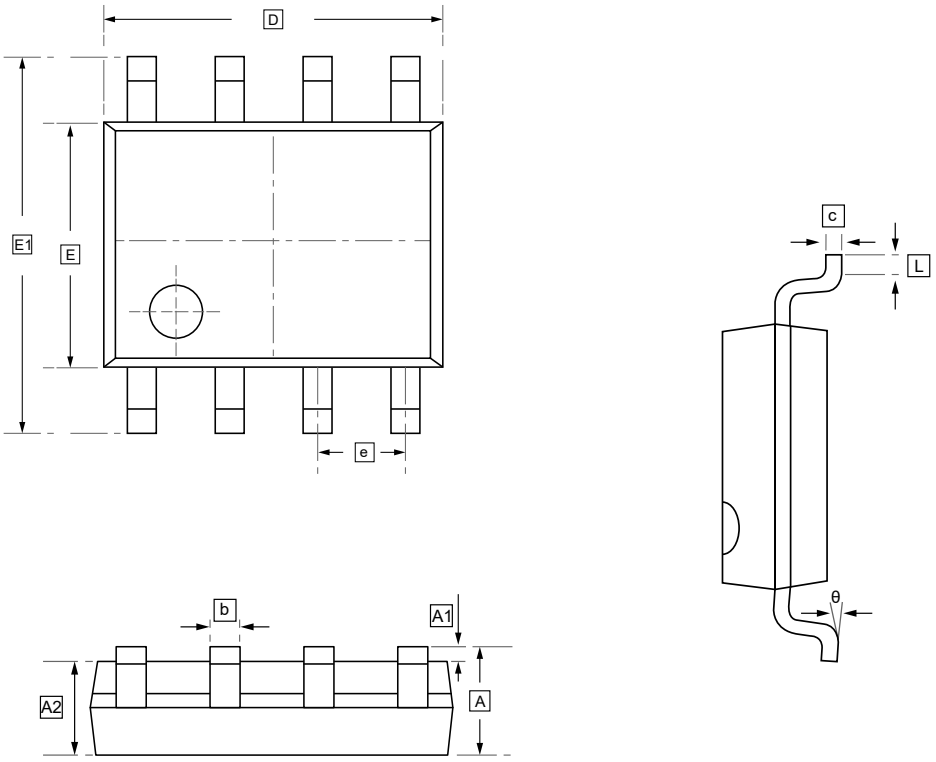

DIMENSIONS (mm are the original dimensions)

Symbol	A	A1	A2	b	c	D	E	E1	e	L	θ
Min	1.350	0.000	1.350	0.330	0.170	4.700	3.800	5.800	1.270	0.400	0°
Max	1.750	0.100	1.550	0.510	0.250	5.100	4.000	6.200	BSC	1.270	8°

17.Ordering information

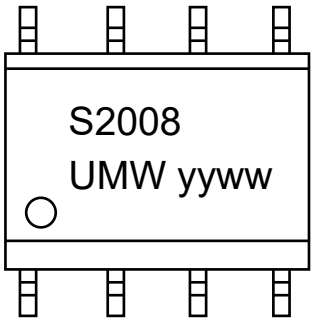

yy: Year Code
ww: Week Code

Order Code	Package	Base QTY	Delivery Mode
UMW IR2008STR	SOP-8	2500	Tape and reel

18.Disclaimer

UMW reserves the right to make changes to all products, specifications. Customers should obtain the latest version of product documentation and verify the completeness and currency of the information before placing an order.

When applying our products, please do not exceed the maximum rated values, as this may affect the reliability of the entire system. Under certain conditions, any semiconductor product may experience faults or failures. Buyers are responsible for adhering to safety standards and implementing safety measures during system design, prototyping, and manufacturing when using our products to prevent potential failure risks that could lead to personal injury or property damage.

Unless explicitly stated in writing, UMW products are not intended for use in medical, life-saving, or life-sustaining applications, nor for any other applications where product failure could result in personal injury or death. If customers use or sell the product for such applications without explicit authorization, they assume all associated risks.

When reselling, applying, or exporting, please comply with export control laws and regulations of China, the United States, the United Kingdom, the European Union, and other relevant countries, regions, and international organizations.

This document and any actions by UMW do not grant any intellectual property rights, whether express or implied, by estoppel or otherwise. The product names and marks mentioned herein may be trademarks of their respective owners.