UMW IRS44273LTR

2A Single-Channel, Low-Side, Non-Inverting Gate Driver

1.Description

The UMW IRS44273LTR device is a low voltage power MOSFET and IGBT in phase gate driver. Proprietary latch-immune of CMOS technology enables single-chip integrated architectures with high robustness. The UMW IRS44273LTR logic input level is compatible with CMOS or TTL logic output levels down to 3.3V. The output driver has Internal Undervoltage Lockout (UVLO) circuitry with hysteresis and buffer stage of output current . The UMW IRS44273LTR is designed to operate over a wide V_{CC} range of 5 V to 25V and wide temperature range of –40°C to 125°C.

2.Applications

- Switch-Mode Power Supplies
- General Gate Driver
- Driving MOSFETs and IGBTs

3.Features

- CMOS schmidt trigger input . Input output in-phase
- Compatible with 3.3V input logic
- 5 to 25-V Single-Supply Range
- High capacitance load driving capability
- Operating Temperature Range of -40 to 125°C
- Undervoltage Lockout
  --Undervoltage Lockout turn-on threshold 4.0V
  --Undervoltage Lockout turn-off threshold 3.9V
- Turn on/Turn off Delays:
  --Ton/Toff =25ns/25ns
- 2-A Peak Source and Sink-Drive Current

4.Pin Configuration

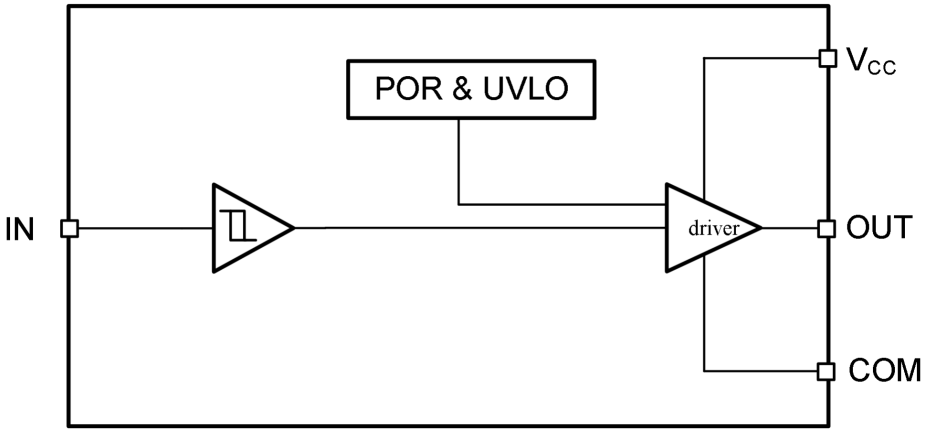

5.Pinning Information

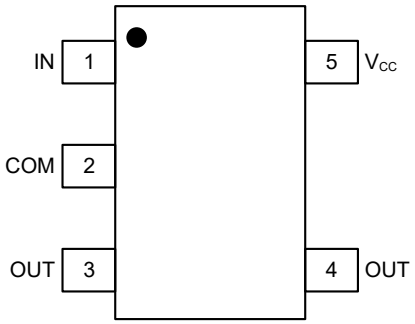

SOT23-5

Lead Definitions

Number	Symbol	Description
1	IN	Logic input.
2	COM	Ground: All signals are referenced to this pin.
3	OUT	Gate drive output.
4	OUT	Gate drive output.
5	V_{CC}	Bias supply input.

6.Absolute Maximum Ratings

Stresses beyond those listed under Absolute Maximum Ratings may cause permanent damage to the device. All voltages are with respect to COM unless otherwise noted, Currents are positive into, negative out of the specified terminal, environment temperature is 25°C.

Parameter	Symbol	Min	Max	Units
Supply voltage range	V_{CC}	-0.3	25	V
OUT voltage range	V_O	-0.3	V_{CC}+0.3	V
IN voltage	V_{IN}	-12	25	V

7.Thermal Information

Parameter	Symbol	Min	Max	Units
Thermal Resistance	Rth_{JA}		151	°C/W
Storage Temperature	T_S	-55	150	°C
Operating Junction Temperature	T_J		150	°C
Lead Temperature	T_L		300	°C

8.Recommended Operating Conditions

To properly operate, device should be used in the following recommended conditions. All voltages are with respect to COM unless otherwise noted, Currents are positive into, negative out of the specified terminal, environment temperature is 25°C.

Parameter	Symbol	Min	Max	Units
Supply voltage range	V_{CC}	5	20	V
OUT voltage range	V_O	0	V_{CC}	V
IN voltage	V_{IN}	-10	V_{CC}	V
ambient temperature	T_A	-40	125	°C

9.Electrical Characteristics

T_A=25°C, V_{CC}=15V, C_L=1nF, unless otherwise specified.

Parameter	Symbol	Min	Typ	Max	Units
Input signal high threshold	V_{IH}	2.7			V
Input signal low threshold	V_{IL}			0.8	V
V_{CC} supply undervoltage positive qoing threshold	V_{CCUV+}	9.2	10.2	11.2	V
V_{CC} supply undervoltage negative going threshold	V_{CCUV-}	8.2	9.2	10.2	V
V_{CC} supply undervoltage lockout hysteresis	V_{CCUVH}		1		V
Input current (IN=5V)	I_{IN+}		6	15	μA
Input current (IN=0V)	I_{IN-}			5	μA
High output voltage, V_{BIAS}-V_O	V_{OH}			0.35	V
Low output voltage	V_{OL}			0.35	V
V_{CC} quiescent supply current	I_Q		180	400	μA
Output high short-circuit pulse current	I_{O+}		2		A
Output low short-circuit pulse current	I_{O-}		2		A
Rise time	t_R			30	ns
Fall time	t_F			30	ns
Turn-on propagation delay	t_{ON}		25	50	ns
Turn-off propagation delay	t_{OFF}		25	50	ns

10.Function Description

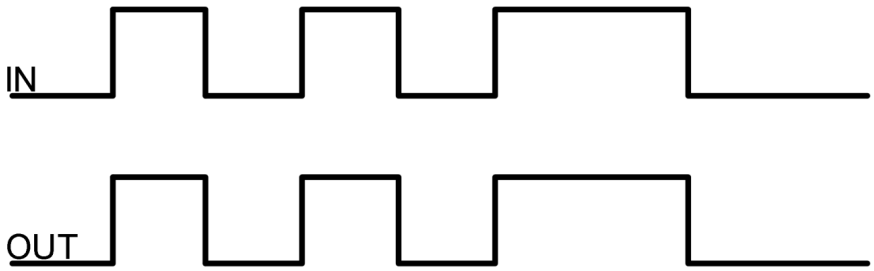

Figure 1. Input-Output waveform

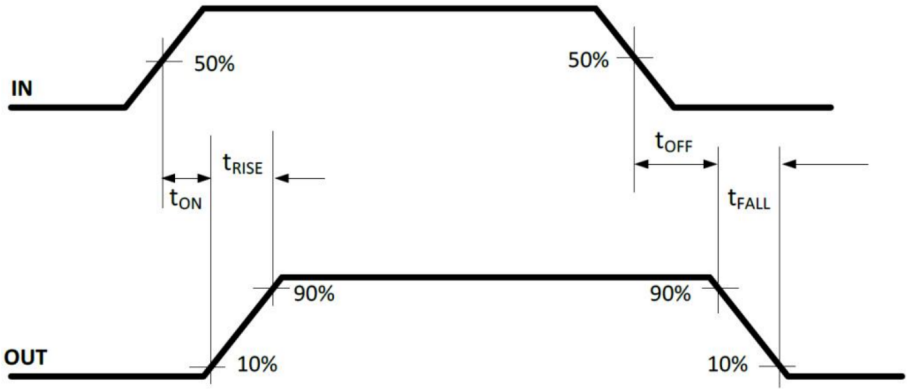

Figure 2. Propagation Time Waveform Definition

11.Function Block Diagram

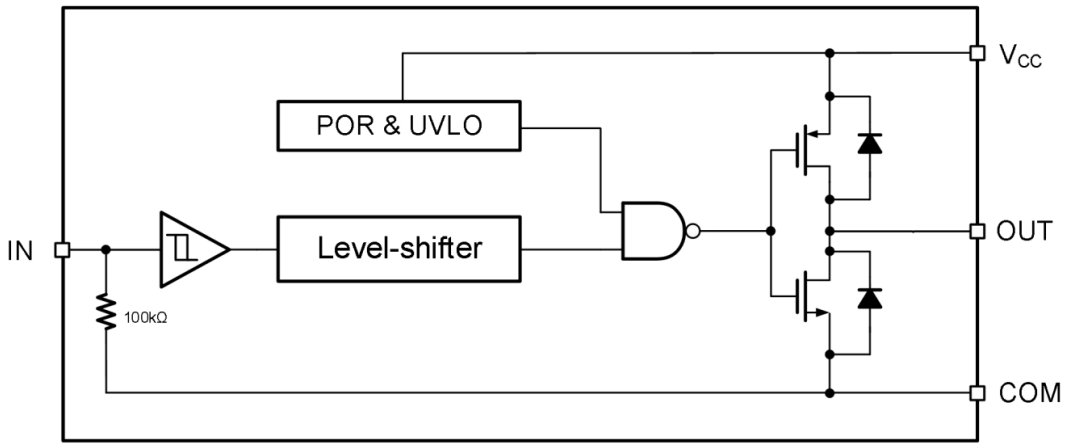

Figure 3. Function Block Diagram of UMW IRS44273LTR

12.Application Message

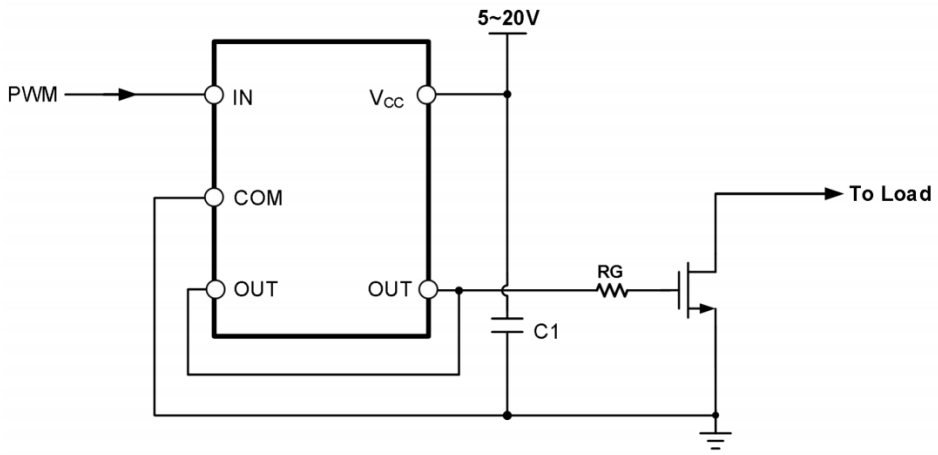

Figure 4. Typical application circuit of UMW IRS44273LTR

13.SOT23-5 Package Outline Dimensions

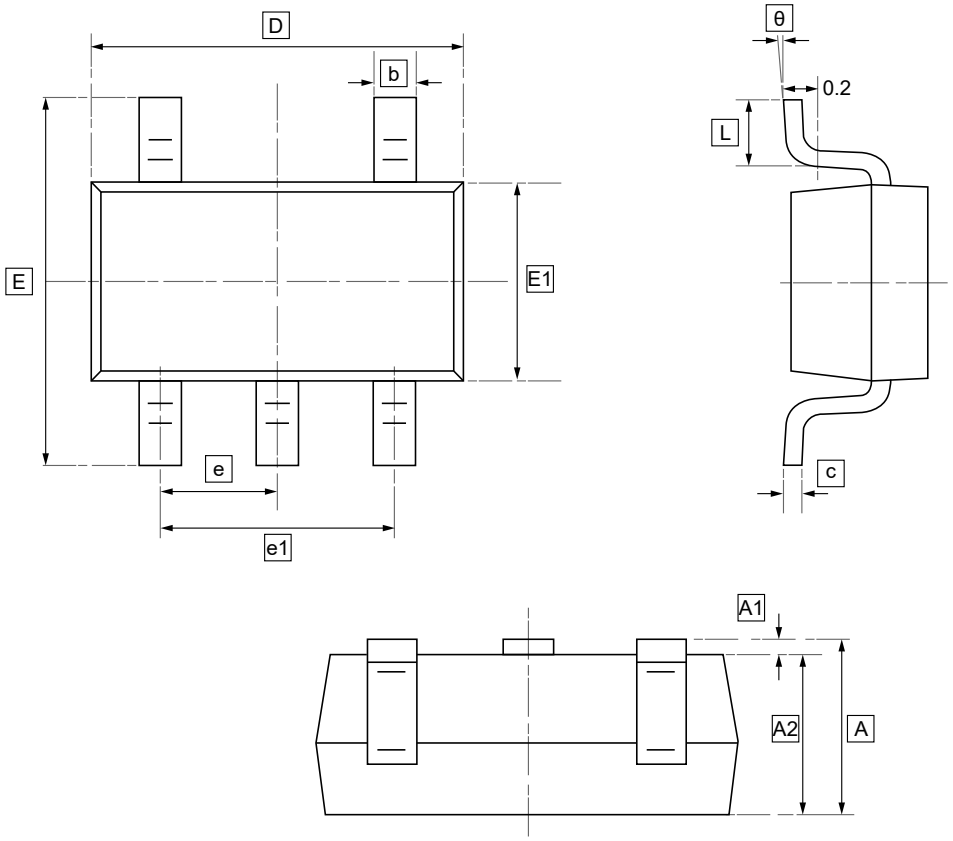

DIMENSIONS (mm are the original dimensions)

Symbol	A	A1	A2	b	c	D	E1	E	e	e1	L	θ
Min	1.050	0.000	1.050	0.300	0.100	2.820	1.500	2.650	0.950	1.800	0.300	0°
Max	1.250	0.100	1.150	0.500	0.200	3.020	1.700	2.950	BSC	2.000	0.600	8°

14.Ordering information

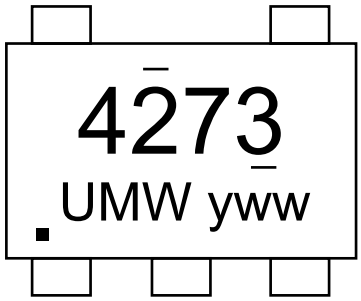

yww: Batch Code

Order Code	Package	Base QTY	Delivery Mode
UMW IRS44273LTR	SOT23-5	3000	Tape and reel

15.Disclaimer

UMW reserves the right to make changes to all products, specifications. Customers should obtain the latest version of product documentation and verify the completeness and currency of the information before placing an order.

When applying our products, please do not exceed the maximum rated values, as this may affect the reliability of the entire system. Under certain conditions, any semiconductor product may experience faults or failures. Buyers are responsible for adhering to safety standards and implementing safety measures during system design, prototyping, and manufacturing when using our products to prevent potential failure risks that could lead to personal injury or property damage.

Unless explicitly stated in writing, UMW products are not intended for use in medical, life-saving, or life-sustaining applications, nor for any other applications where product failure could result in personal injury or death. If customers use or sell the product for such applications without explicit authorization, they assume all associated risks.

When reselling, applying, or exporting, please comply with export control laws and regulations of China, the United States, the United Kingdom, the European Union, and other relevant countries, regions, and international organizations.

This document and any actions by UMW do not grant any intellectual property rights, whether express or implied, by estoppel or otherwise. The product names and marks mentioned herein may be trademarks of their respective owners.