UMW LM193DR

Low Power Low Offset Voltage Dual Comparators

1.Features

- Wide Single-Supply Range: 2.0V to 32V
- Split-Supply Range: ±1.0V to ±16V
- Very Low Current Drain Independent of Supply Voltage: 0.4mA
- Low Input Bias Current: 25nA
- Low Input Offset Current: 5.0nA
- Low Input Offset Voltage: 5.0mV (max)
- Input Common Mode Range to Ground Level
- Differential Input Voltage Range Equal to Power Supply Voltage

2.Pinning Information

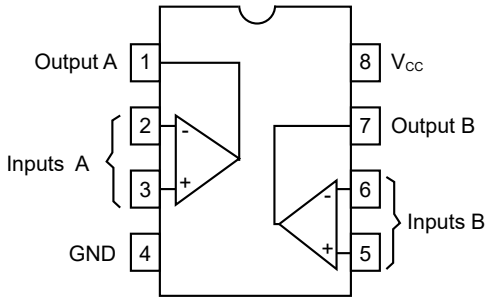

3.Representative Schematic Diagram

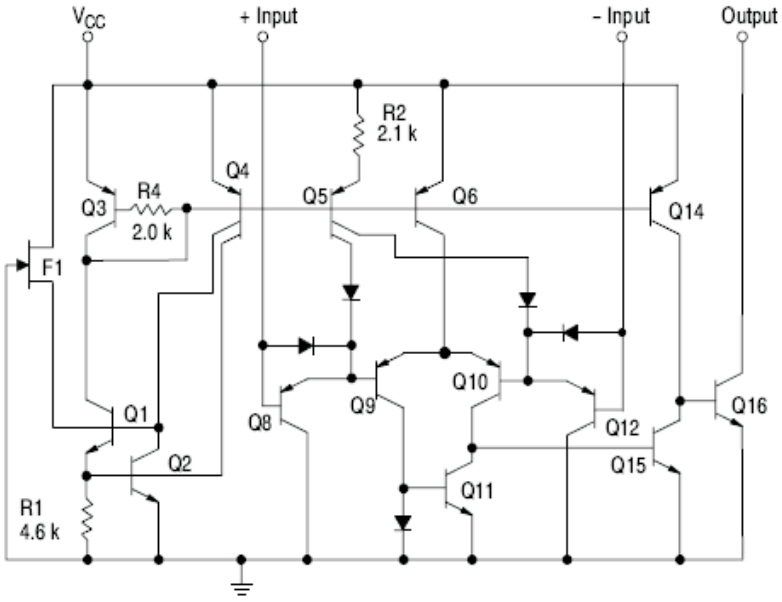

4.Absolute Maximum Ratings T_A=25°C

Parameter	Symbol	Ratings	Units
Power Supply Voltage	V_{CC}	+32 or ±16	V
Input Differential Voltage Range	V_{IDR}	32	V
Input Common Mode Voltage Range	V_{ICR}	-0.3 to +32	V
Output Short Circuit-to-Ground	I_{SC}	Continuous	mA
Output Sink Current*	I_{Sink}	20	mA
Power Dissipation @ T_A=25°C	P_D	570	mW
Derate above 25°C	$1/R_{\theta JA}$	5.7	mW/°C
Operating Ambient Temperature Range	T_A	-40 to +105	°C
Maximum Operating Junction Temperature	$T_{J(max)}$	150	°C
Storage Temperature Range	T_{STG}	-65 to +150	°C
ESD Protection at any Pin	V_{ESD}	-	-
- Human Body Mode		2000	V
-Machine Model		200	V

* The maximum output current may be as high as 20mA, independent of the magnitude of V_{CC}, output short circuits to V_{CC} can cause excessive heating and eventual destruction.

5.Electrical Characteristics

V_{CC}=5.0V, 0°C≤T_A≤70°C ,unless otherwise noted.

Parameter	Symbol	Conditions	Min	Typ	Max	Units
Input Offset Voltage*1	V_{IO}	T_A=25°C		±1	±5	mV
		0°C≤T_A≤70°C			9	mV
Input Offset Current	I_{IO}	T_A=25°C		±5	±50	nA
		0°C≤T_A≤70°C			±150	nA
Input Bias Current *2	I_{IB}	T_A=25°C		25	250	nA
		0°C≤T_A≤70°C			400	nA
Input Common Mode Voltage Range *2	V_{ICR}	T_A=25°C	0		V_{CC}-1.5	V
		0°C≤T_A≤70°C	0		V_{CC}-2	V
Voltage Gain	A_{VOL}	R_L≥15kΩ, V_{CC}=15V, T_A=25°C	50	200		V/mV
Large Signal Response Time		V_{in}=TTL, Logic Swing, V_{ref}=1.4V V_{RL}=5.0V, R_L=5.1kΩ, T_A=25°C		300		ns
Response Time *4	t_{TLH}	V_{RL}=5.0V, R_L=5.1kΩ, T_A=25°C		1.3		μs
Input Differential Voltage *5	V_{ID}	All V_{in}≥GND or V-Supply (if used)			V_{CC}	V
Output Sink Current	I_{Sink}	V_{in}≥1.0V, V_{in+}=0V, V_O≤1.5V, T_A=25°C	6	16		mA
Output Saturation Voltage	V_{OL}	V_{in}≥1.0V, V_{in+}=0V, I_{Sink}≤4.0mA		150	400	mV
		T_A=25°C, 0°C≤T_A≤70°C			700	mV
Output Leakage Current	I_{OL}	V_{in-}=0V, V_{in+}≥1.0V, V_O=5.0V, T_A=25°C		0.1		nA
		V_{in-}=0V, V_{in+}≥1.0V, V_O=30V, 0°C≤T_A≤70°C			1000	nA
Supply Current	I_{CC}	R_L=∞Both Comparators, T_A=25°C		0.4	1	mA
		R_L=∞Both Comparators, V_{CC}=30V			2.5	mA

Notes: *1. At output switch point, V_O=1.4V, R_S=0Ω with V_{CC} from 5.0V to 30V, and over the full input common mode range (0V to V_{CC}=-1.5 V).

*2. Due to the PNP transistor inputs, bias current will flow out of the inputs. This current is essentially constant, independent of the output state, therefore, no loading changes will exist on the input lines.

*3. Input common mode of either input should not be permitted to go more than 0.3V negative of ground or minus supply. The upper limit of common mode range is V_{CC} -1.5 V.

*4. Response time is specified with a 100 mV step and 5.0 mV of overdrive. With larger magnitudes of overdrive faster response times are obtainable.

*5. The comparator will exhibit proper output state if one of the inputs becomes greater than V_{CC}, the other input must remain within the common mode range. The low input state must not be less than -0.3V of ground or minus supply.

6.Typical Characteristic

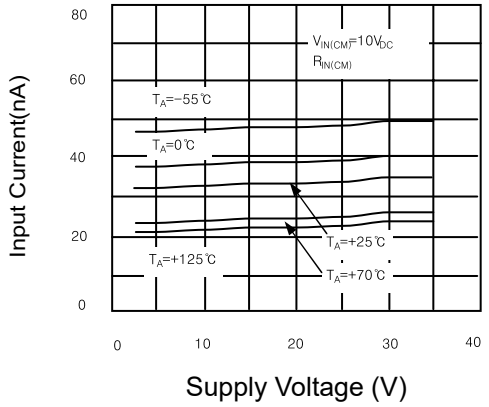

Figure 1: Input Current versus Supply Voltage

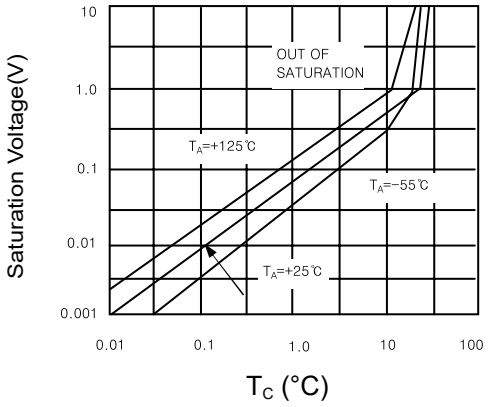

Figure 2: Output Sink Current(mA)

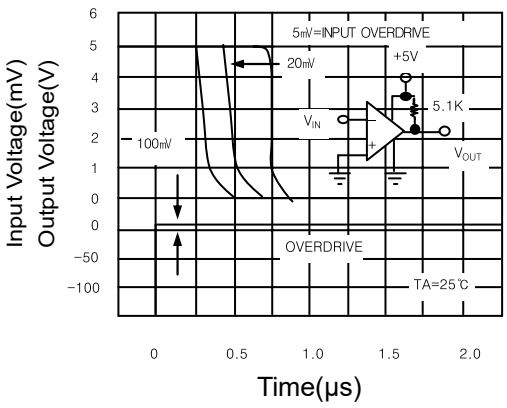

Figure 3: Response Time For Various Input Overdrives -negative Transition

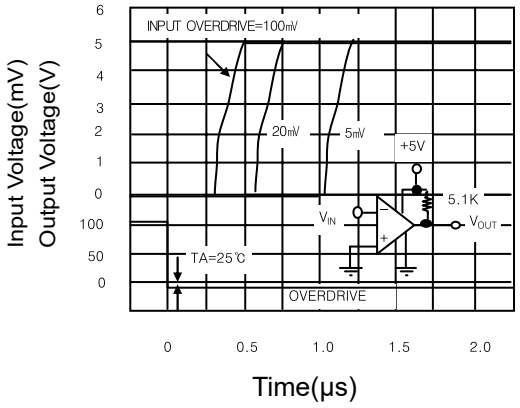

Figure 4: Response Time For Various Input Overdrives -positive Transition

7.SOP-8 Package Outline Dimensions

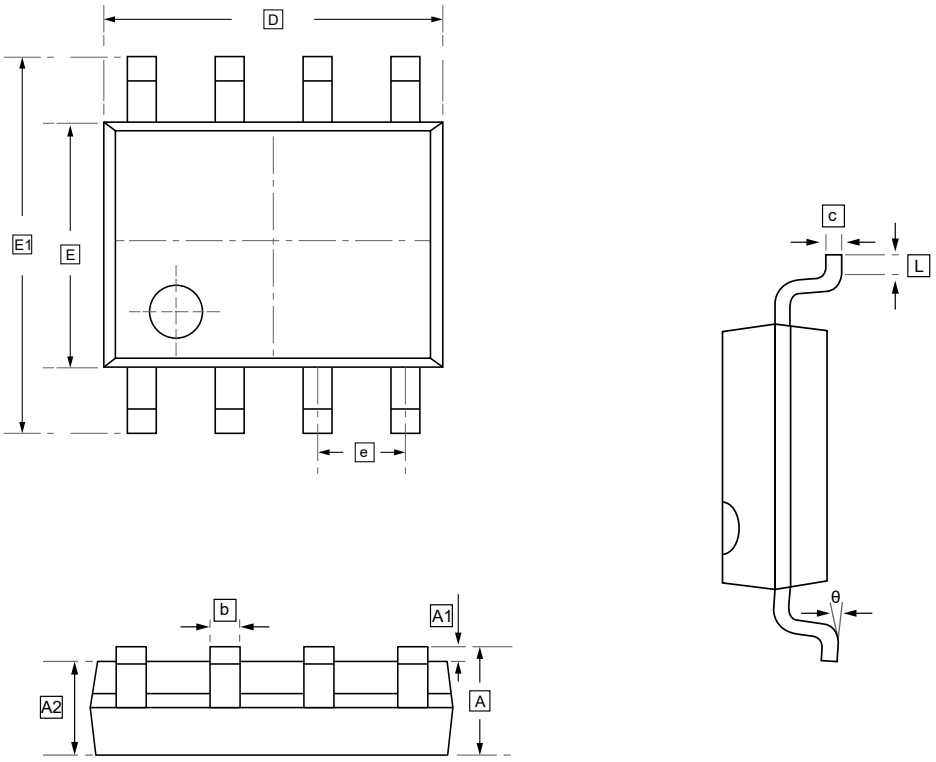

DIMENSIONS (mm are the original dimensions)

Symbol	A	A1	A2	b	c	D	E	E1	e	L	θ
Min	1.350	0.000	1.350	0.330	0.170	4.700	3.800	5.800	1.270	0.400	0°
Max	1.750	0.100	1.550	0.510	0.250	5.100	4.000	6.200	BSC	1.270	8°

8.Ordering information

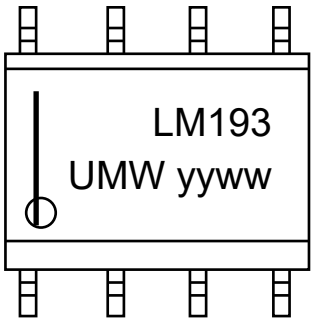

yy: Year Code
ww: Week Code

Order Code	Package	Base QTY	Delivery Mode
UMW LM193DR	SOP-8	2500	Tape and reel

9.Disclaimer

UMW reserves the right to make changes to all products, specifications. Customers should obtain the latest version of product documentation and verify the completeness and currency of the information before placing an order.

When applying our products, please do not exceed the maximum rated values, as this may affect the reliability of the entire system. Under certain conditions, any semiconductor product may experience faults or failures. Buyers are responsible for adhering to safety standards and implementing safety measures during system design, prototyping, and manufacturing when using our products to prevent potential failure risks that could lead to personal injury or property damage.

Unless explicitly stated in writing, UMW products are not intended for use in medical, life-saving, or life-sustaining applications, nor for any other applications where product failure could result in personal injury or death. If customers use or sell the product for such applications without explicit authorization, they assume all associated risks.

When reselling, applying, or exporting, please comply with export control laws and regulations of China, the United States, the United Kingdom, the European Union, and other relevant countries, regions, and international organizations.

This document and any actions by UMW do not grant any intellectual property rights, whether express or implied, by estoppel or otherwise. The product names and marks mentioned herein may be trademarks of their respective owners.