UMW LM2674M

DC-DC switching buck converter

1.Description

LM2674M series is a DC/DC switching buck converter controlled by a fixed frequency of 260kHz PWM.It is mainly composed of internal frequency compensation, fixed frequency oscillator, built-in overcurrent protection, power switch control and other circuits. It can drive 500MA load with high efficiency, low ripple, good linearity and load adjustment ability.Only a few external components are needed to realize the function of DC/DC voltage reduction and stabilization, which is very simple and practical.PWM control circuit can adjust the duty cycle from 0 according to the load To 100% to achieve high work efficiency.It has an external enabling control opening function, which can realize the controllable switch between standby and work, making the application more flexible.

2.Features

- Built in overtemperature shutdown function
- Built in overcurrent protection function
- Internal integrated efficient power switch
- Good linearity and load adjustment capability
- ON/OFF pin with hysteresis function
- TTL shutdown capability
- high efficiency
- Simple periphery
- Wide input voltage range: 7V~40V
- Fixed output voltage: 3.3V, 5V, 12V,
- Adjustable output voltage range: 1.21V~37V (adjustable)
- High precision output: ± 2%
- Fixed switching frequency: 260 kHz
- Maximum output current capacity: 500mA
- Minimum linear drop voltage drop: 1.5V
- Package form: SOP-8

3.Product Use

- LCD and LCD TV
- ADSL modem
- LED lights, LED backlight
- Digital photo frame
- Telecommunication/network equipment

4.Pinning Information

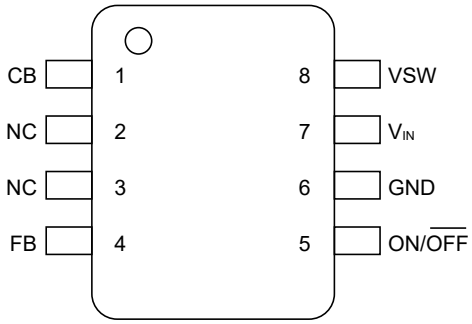

SOP-8

Pin Descriptions

Pin Number	Pin Name	Description
1	CB	Boost capacitance terminal
2	NC	Empty port
3	NC	Empty port
4	FB	Feedback control terminal
5	ON/OFF	Enable terminal High=ON and low=OFF
6	GND	Power supply ground terminal
7	V_{IN}	Positive terminal of power supply
8	VSW	Power switch output terminal (SW)

5.Application Circuit

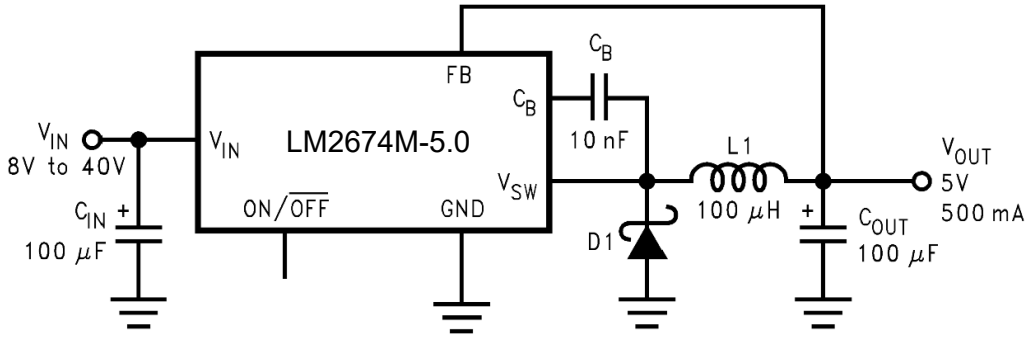

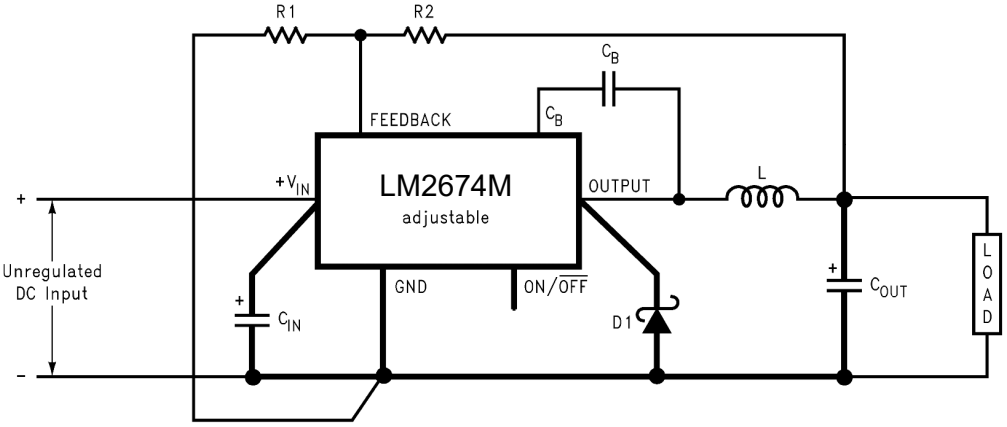

$V_{OUT}=V_{REF}(1+R2/R1)$

C_B: 103/50V

6.Limit Parameter

Explain	Project	Symbol	Limit Value	Company
Input terminal voltage	Voltage	V_{IN}	45	V
FB feedback terminal voltage		V_{FB}	-0.3 ~ V_{IN}	V
Switch output terminal voltage		V_{VSW}	-1 ~ V_{IN}	V
Enable enabling terminal voltage		V_{ON-OFF}	-0.3 ~ 6	V
SOP8 package	Maximum power consumption	P_D	Internally Limited	mW
Put in air without external heat sink	Thermal resistance	R_{JA}	30	°C/W
Operating temperature range	Temperature	T_J	-40 to 125	°C
Storage temperature range		T_C	-40 to 150	°C
Welding temperature		T_H	260	°C,10s

Note: Limit parameter refers to the limit value that cannot be exceeded under any conditions.Once the limit value is exceeded, it may cause physical damage such as product deterioration;At the same time, the chip can not be guaranteed to work normally under the limit parameters.

7.1 Electrical Characteristics, T_A=25°C (LM2674M-3.3V)

Parameter	Symbol	Conditions		Min.	Typ.	Max.	Units
Output Voltage	V_{OUT}	V_{IN}=7V to 40V, I_{OUT}=20MA to 500MA		3.234	3.3	3.366	V
Enable Shutdown Current	I_{STB}	V_{IN}=40V, V_{ON-OFF}=0V			100	200	μA
Quiescent Current	I_q	V_{IN}=12V, V_{FB}=8V, V_{ON-OFF}=5V			3	7	mA
Output Peak Current	I_{CL}	V_{IN}=12V, V_{ON-OFF}=5V, V_{FB}=0, no L1 and D1			1.2		A
Output Leakage Current	I_{OL}	V_{IN}=40V, V_{ON-OFF}=0V no L1 and D1	V_{VSW}=0V			10	μA
			V_{VSW}=-1V		2.5	10	mA
Enable Enable Terminal Current	$I_{ON-OFFL}$	V_{IN}=12V, V_{ON-OFF}=0.5V			4	15	μA
	$I_{ON-OFFH}$	V_{IN}=12V, V_{ON-OFF}=2.5V			1.5	15	μA
Enable Effective Voltage of Enable Terminal	$V_{ON-OFFH}$	V_{IN}=12V(ON)		1.5			V
	$V_{ON-OFFL}$	V_{IN}=12V(OFF)				0.8	V
Output Saturation Voltage	V_{CE}	V_{IN}=12V, V_{FB}=0V, I_{OUT}=500MA			1	1.5	V
Switching Frequency	fosc	V_{IN}=12V		225	260	275	kHz
Duty Cycle	D_{MAX}	V_{IN}=12V, V_{FB}=0V		0		100	%
Efficiency	η	V_{IN}=12V, V_{OUT}=3.3V, I_{OUT}=500MA			80		%
Input Voltage	V_{IN}			7		40	V

7.2 Electrical Characteristics, T_A=25°C (LM2674M-5.0V)

Parameter	Symbol	Conditions		Min.	Typ.	Max.	Units
Output Voltage	V_{OUT}	V_{IN}=7V to 40V, I_{OUT}=20MA to 500MA		4.9	5	5.1	V
Enable Shutdown Current	I_{STB}	V_{IN}=40V, V_{ON-OFF}=0V			100	200	μA
Quiescent Current	I_q	V_{IN}=12V, V_{FB}=8V, V_{ON-OFF}=5V			3	7	mA
Output Peak Current	I_{CL}	V_{IN}=12V, V_{ON-OFF}=5V, V_{FB}=0, no L1 and D1			1.2		A
Output Leakage Current	I_{OL}	V_{IN}=40V, V_{ON-OFF}=0V	V_{VSW}=0V			10	μA
		no L1 and D1	V_{VSW}=-1V		2.5	10	mA
Enable Enable Terminal Current	$I_{ON-OFFL}$	V_{IN}=12V, V_{ON-OFF}=0.5V			4	15	μA
	$I_{ON-OFFH}$	V_{IN}=12V, V_{ON-OFF}=2.5V			1.5	15	μA
Enable Effective Voltage of Enable Terminal	$V_{ON-OFFH}$	V_{IN}=12V(ON)		1.5			V
	$V_{ON-OFFL}$	V_{IN}=12V(OFF)				0.8	V
Output Saturation Voltage	V_{CE}	V_{IN}=12V, V_{FB}=0V, I_{OUT}=500MA			1	1.5	V
Switching Frequency	fosc	V_{IN}=12V		225	260	275	kHz
Duty Cycle	D_{MAX}	V_{IN}=12V, V_{FB}=0V		0		100	%
Efficiency	η	V_{IN}=12V, V_{OUT}=5V, I_{OUT}=500MA			80		%
Input Voltage	V_{IN}			7		40	V

7.3 Electrical Characteristics, T_A=25°C (LM2674M-12V)

Parameter	Symbol	Conditions		Min.	Typ.	Max.	Units
Output Voltage	V_{OUT}	V_{IN}=14V to 40V, I_{OUT}=20MA to 500MA		11.76	12	12.24	V
Enable Shutdown Current	I_{STB}	V_{IN}=40V, V_{ON-OFF}=0V			100	200	μA
Quiescent Current	I_q	V_{IN}=15V, V_{FB}=13V, V_{ON-OFF}=5V			3	7	mA
Output Peak Current	I_{CL}	V_{IN}=15V, V_{ON-OFF}=5V, V_{FB}=0, no L1 and D1			1.2		A
Output Leakage Current	I_{OL}	V_{IN}=40V, V_{ON-OFF}=0V no L1 and D1	V_{VSW}=0V			10	μA
			V_{VSW}=-1V		2.5	10	mA
Enable Enable Terminal Current	$I_{ON-OFFL}$	V_{IN}=15V, V_{ON-OFF}=0.5V			4	15	μA
	$I_{ON-OFFH}$	V_{IN}=15V, V_{ON-OFF}=2.5V			1.5	15	μA
Enable Effective Voltage of Enable Terminal	$V_{ON-OFFH}$	V_{IN}=15V(ON)		1.5			V
	$V_{ON-OFFL}$	V_{IN}=15V(OFF)				0.8	V
Output Saturation Voltage	V_{CE}	V_{IN}=15V, V_{FB}=0V, I_{OUT}=500MA			1	1.5	V
Switching Frequency	fosc	V_{IN}=15V		225	260	275	kHz
Duty Cycle	D_{MAX}	V_{IN}=15V, V_{FB}=0V		0		100	%
Efficiency	η	V_{IN}=15V, V_{OUT}=12V, I_{OUT}=500MA			85		%
Input Voltage	V_{IN}			13.5		40	V

7.4 Electrical Characteristics, T_A=25°C (LM2674M-ADJ)

Parameter	Symbol	Conditions		Min.	Typ.	Max.	Units
Reference Voltage	V_{REF}	V_{IN}=7V to 40V, I_{OUT}=20MA to 500MA		1.185	1.21	1.234	V
Enable Shutdown Current	I_{STB}	V_{IN}=40V, V_{ON-OFF}=V_{VSW}			100	200	μA
Quiescent Current	I_q	V_{ON-OFF}=0V, V_{FB}=V_{IN}			3	7	mA
Output Peak Current	I_{CL}	V_{ON-OFF}=V_{FB}=0, no L1 and D1			1.2		A
Output Leakage Current	I_{OL}	V_{IN}=V_{FB}, V_{ON-OFF}=5V no L1 and D1	V_{VSW}=0V			10	μA
			V_{VSW}=-1V		2.5	10	mA
Enable Enable Terminal Current	$I_{ON-OFFL}$	V_{IN}=12V, V_{ON-OFF}=0.5V			4	15	μA
	$I_{ON-OFFH}$	V_{IN}=12V, V_{ON-OFF}=2.5V			1.5	15	μA
Enable Effective Voltage of Enable Terminal	$V_{ON-OFFH}$	V_{IN}=12V(OFF)		1.5			V
	$V_{ON-OFFL}$	V_{IN}=12V(ON)				0.8	V
Feedback Terminal Current	I_{FB}	V_{IN}=12V, V_{FB}=1.3V			85		nA
Output Saturation Voltage	V_{CE}	V_{IN}=12V, V_{FB}=0V, I_{OUT}=500MA			1	1.5	V
Switching Frequency	fosc	V_{IN}=12V		225	260	275	kHz
Duty Cycle	D_{MAX}	V_{IN}=12V, V_{FB}=0V		0		100	%
Efficiency	η	V_{IN}=12V, V_{OUT}=5V, I_{OUT}=500MA			80		%
Input Voltage	V_{IN}			7		40	V

8.1 Typical Characteristic

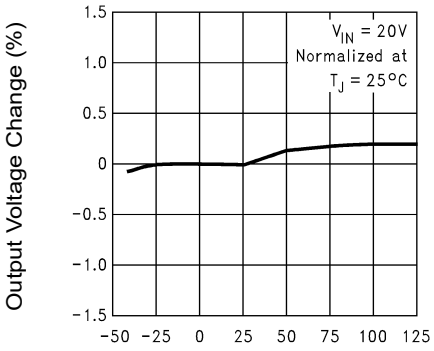

Figure 1: Normalized Output Voltage

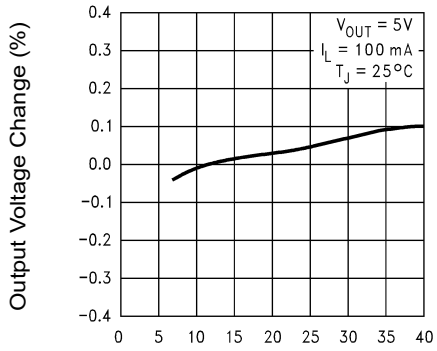

Figure 2: Line Regulation

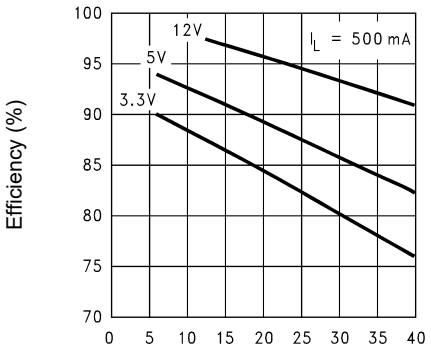

Figure 3: Efficiency

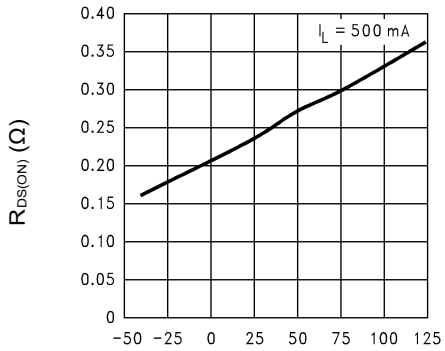

Figure 4: Drain-to-Source Resistance

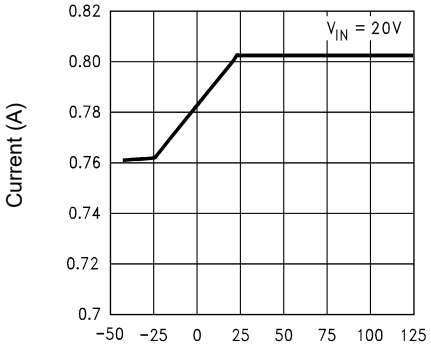

Figure 5: Switch Current imit

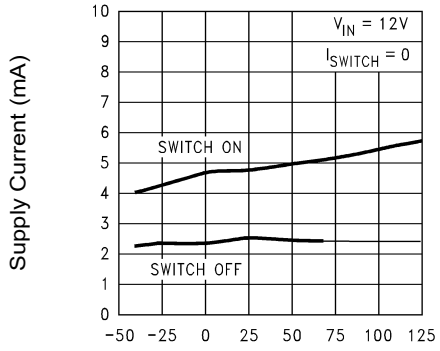

Figure 6: Operating Quiescent Current

8.2 Typical Characteristic

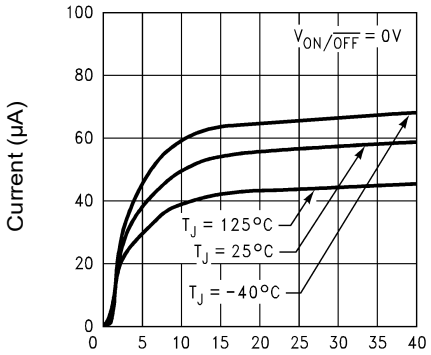

Figure 7: Standby Quiescent Current

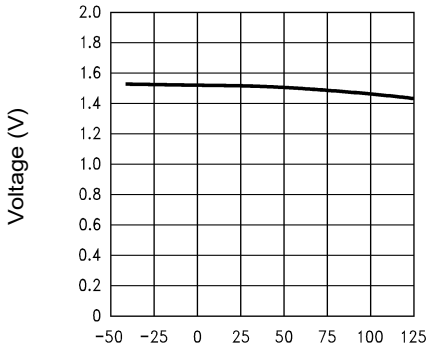

Figure 8: ON/ $\overline{OFF}$ Threshold Voltage

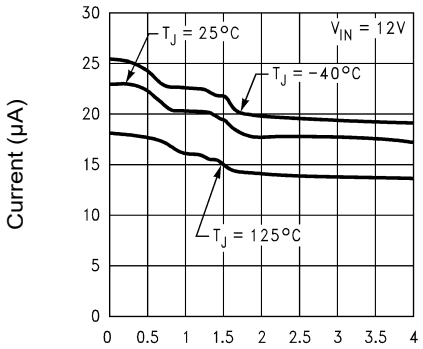

Figure 9: ON/$\overline{OFF}$ Pin Current (Sourcing)

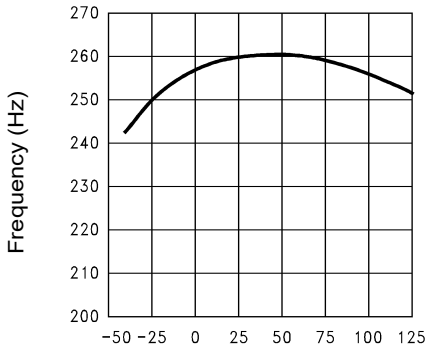

Figure 10: Switching Frequency

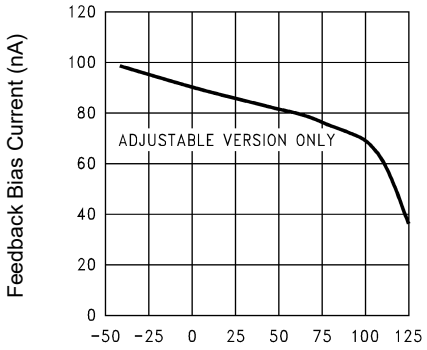

Figure 11: Feedback Pin Bias Current

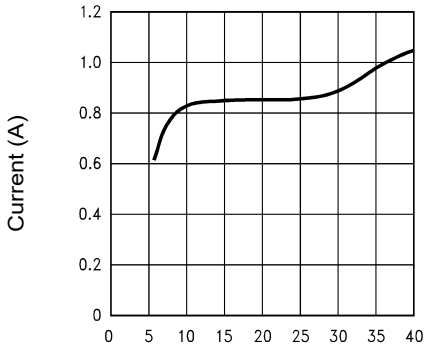

Figure 12: Peak Switch Current

8.3 Typical Characteristic

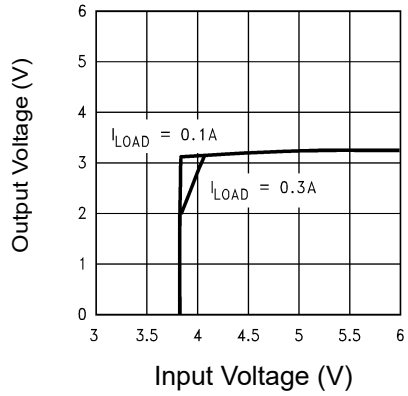

Figure 13: Dropout Voltage, 3.3-V Version

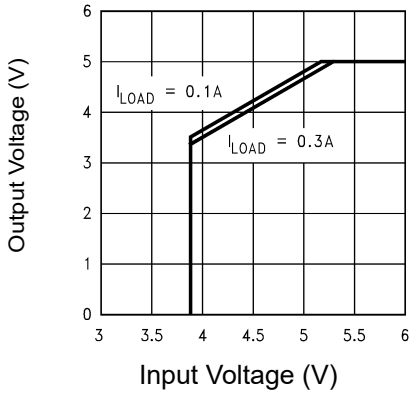

Figure 14: Dropout Voltage, 5-V Version

9.SOP-8 Package Outline Dimensions

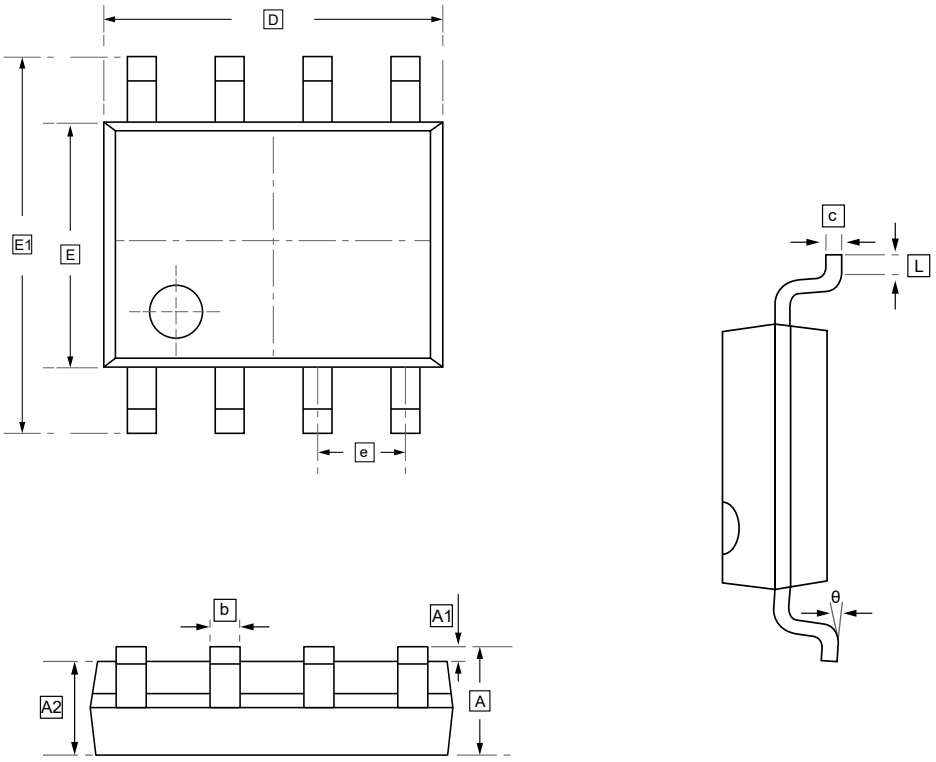

DIMENSIONS (mm are the original dimensions)

Symbol	A	A1	A2	b	c	D	E	E1	e	L	θ
Min	1.350	0.000	1.350	0.330	0.170	4.700	3.800	5.800	1.270	0.400	0°
Max	1.750	0.100	1.550	0.510	0.250	5.100	4.000	6.200	BSC	1.270	8°

10.Ordering Information

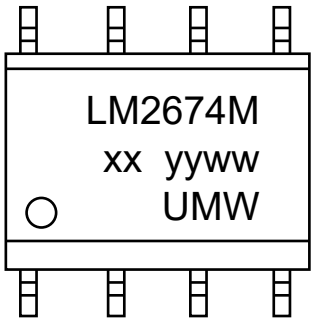

yy: Year Code
ww: Week Code
xx: Voltage

Order Code	Marking	Package	Base QTY	Delivery Mode
UMW LM2674M-5.0	LM2674M-5.0	SOP-8	2500	Tape and reel
UMW LM2674M-ADJ	LM2674M-ADJ	SOP-8	2500	Tape and reel
UMW LM2674M-3.3	LM2674M-3.3	SOP-8	2500	Tape and reel
UMW LM2674M-12	LM2674M-12	SOP-8	2500	Tape and reel

11.Disclaimer

UMW reserves the right to make changes to all products, specifications. Customers should obtain the latest version of product documentation and verify the completeness and currency of the information before placing an order.

When applying our products, please do not exceed the maximum rated values, as this may affect the reliability of the entire system. Under certain conditions, any semiconductor product may experience faults or failures. Buyers are responsible for adhering to safety standards and implementing safety measures during system design, prototyping, and manufacturing when using our products to prevent potential failure risks that could lead to personal injury or property damage.

Unless explicitly stated in writing, UMW products are not intended for use in medical, life-saving, or life-sustaining applications, nor for any other applications where product failure could result in personal injury or death. If customers use or sell the product for such applications without explicit authorization, they assume all associated risks.

When reselling, applying, or exporting, please comply with export control laws and regulations of China, the United States, the United Kingdom, the European Union, and other relevant countries, regions, and international organizations.

This document and any actions by UMW do not grant any intellectual property rights, whether express or implied, by estoppel or otherwise. The product names and marks mentioned herein may be trademarks of their respective owners.