UMW LM2904

Dual operational amplifier

1.Description

The LM2904 consist of two independen hig gain operational amplifiers. It can work with a single power supply or with a dual power supply, and the current consumption of the power supply has nothing to do with the power supply voltage. Applications include variable frequency amplifiers, DC gain sections and all conventional op amp circuits. Available in DIP8 or SOP8 packages.

2.Features

- Can work with single or dual power supply
- Two internally compensated op amps in one package
- logic circuit matching.
- Low power consumption.
- Wide frequency range

3.Pinning Information

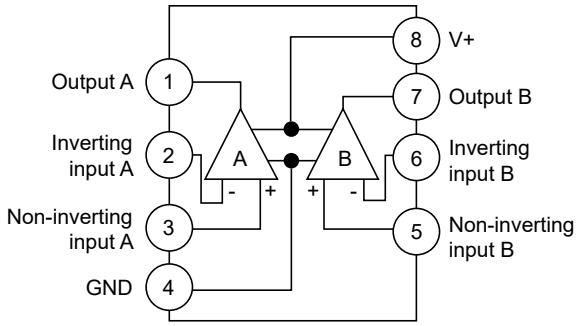

DIP8/SOP8

4.Limit value(absolute maximum rating, if not otherwise specified, Tamb=25°C)

Parameter		Value	Units
Voltage		26 or ±13	V
Differential input voltage		±26	V
Input voltage		-0.3 ~ 26	V
Power consumption	SOP/TSSOP-8 package	530	mW
Output short-circuit current to ground (1 amplifier) (Note 2) (V^+≤15V, T_A=25°C)		continued	
Working temperature		-40 ~ 125	°C
Storage temperature		-65 ~ 150	°C

5.Electrical characteristics

For V_S = (V+) – (V–) = 5V, T_A=25°C (unless otherwise noted)

Parameter	Symbol	Conditions(1)		Min	Typ(2)	Max	Units
OFFSET VOLTAGE							
Input offset voltage	V_{OS}	V_S=5V to maximum			3	7	mV
		V_{CM}=0V, V_O=1.4V	T_A=-40°C to 125°C			10	mV
Input offset voltage drift	dV_{OS}/d_T				7		μV/°C
Input offset voltage vs power supply($\Delta V_{IO}/\Delta V_S$)	PSRR	V_S=5V to 30V		65	100		dB
Channel separation	V_{O1}/V_{O2}	f=1kHz to 20kHz			120		dB
INPUT VOLTAGE RANGE							
Common-mode voltage range	V_{CM}	V_S=5V to maximum		(V-)		(V+)-1.5	V
			T_A=-40°C to 125°C	(V-)		(V+)-2	V
Common-mode rejection ratio	CMRR	V_S=5V to maximum;V_{CM}=0V		65	80		dB
INPUT BIAS CURRENT							
Input bias current	I_B	V_O=1.4V			-20	-250	nA
			T_A=-40°C to 125°C			-500	nA
Input offset current	I_{OS}	V_O=1.4V			2	50	nA
			T_A=-40°C to 125°C			300	nA
Input offset current drift	dI_{OS}/d_T		T_A=-40°C to 125°C		10		pA/°C
NOISE							
Input voltage noise density	e_n	f=1kHz			40		nV/√Hz
OPEN-LOOP GAIN							
Open-loop voltage gain	A_{OL}	V_S=15V, V_O=1V to 11V, R_L≥2kΩ		25	100		V/mV
			T_A=-40°C to 125°C	15			V/mV

Parameter	Symbol	Conditions(1)			Min	Typ(2)	Max	Units
FREQUENCY RESPONSE								
Gain bandwidth product	GBW					0.7		MHz
Slew rate	SR	G=+1				0.3		V/μs
OUTPUT								
Voltage output swing from rail	V_O	Positive rail	R_L≥10kΩ		V_S-1.5			V
			V_S=maximum,R_L=2kΩ	T_A=-40°C to 125°C			4	V
			V_S=maximum,R_L≥10kΩ			2	3	V
		Negative rail, V_S=5 V, R_L≤10kΩ		T_A=-40°C to 125°C		5	20	mV
Output current	I_O	V_S=15V,V_O=0V,V_{ID}=1V,Source			-20	-30		mA
				T_A=-40°C to 125°C	-10			mA
		V_S=15V,V_O=15V,V_{ID}=-1V,Sink			10	20		mA
				T_A=-40°C to 125°C	5			mA
		V_{ID}=-1V, V_O=200mV				30		μA
Short-circuit current	I_{SC}	V_S=10V, V_O=V_S/2				±40	±60	mA
POWER SUPPLY								
Quiescent current per amplifier	I_Q	V_O=2.5V, I_O=0A		T_A=-40°C to 125°C		350	600	μA
		V_S=maximum,V_O=maximum/2,I_O=0A				500	1000	μA

Notes:

(1) All characteristics are measured under open-loop conditions, with zero common-mode input voltage, unless otherwise specified. Maximum V_S for testing purposes is 26V for LM2904.

(2) All typical values are T_A=25°C.

6.1 Typical Characterisitics

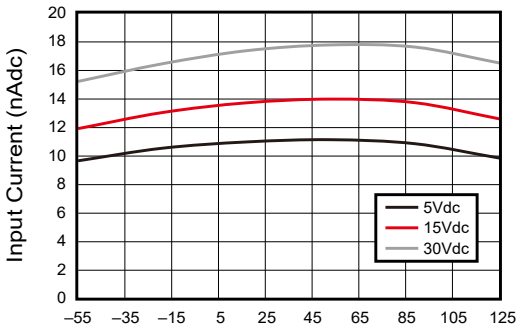

Figure 1: Input Current vs Temperature

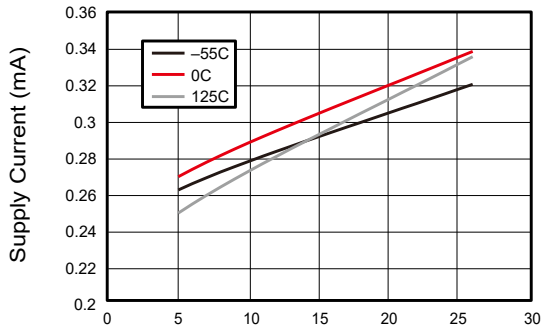

Figure 2: Supply Current vs Supply Voltage

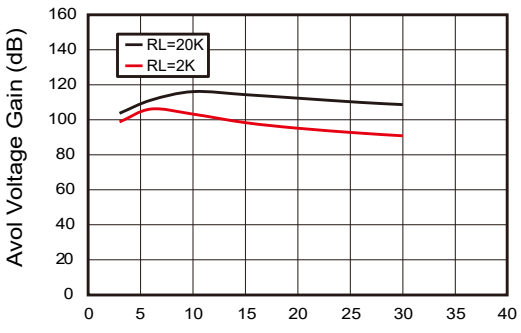

Figure 3: Voltage Gain vs Supply Voltage

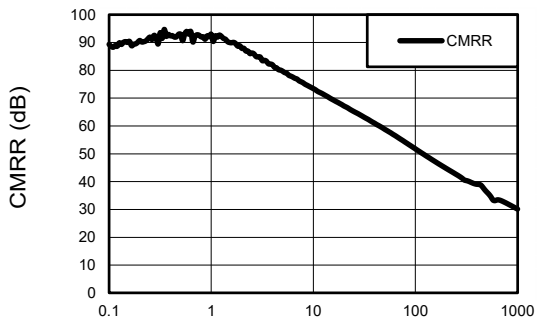

Figure 4: Common-Mode Rejection Ratio vs Frequency

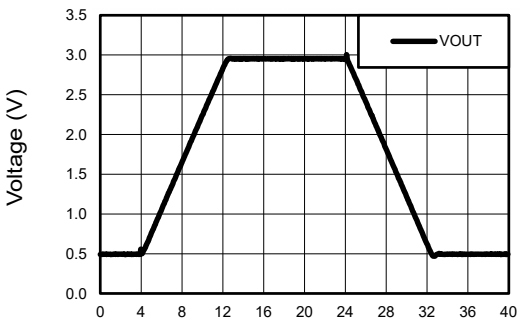

Figure 5: Voltage Follower Large Signal Response (50 pF)

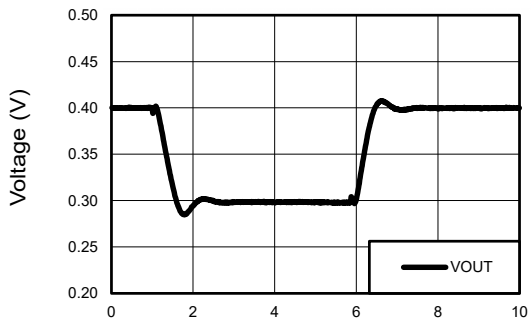

Figure 6: Voltage Follower Small Signal Response (50 pF)

6.2 Typical Characterisitics

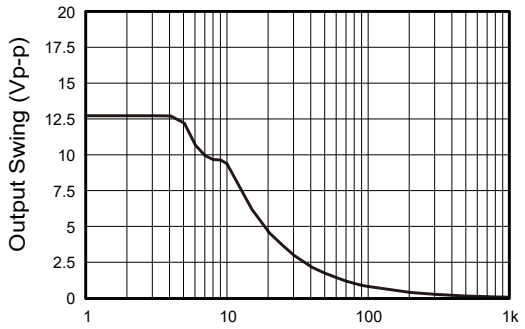

Figure 7: Maximum Output Swing vs Frequency (V_{CC}=15V)

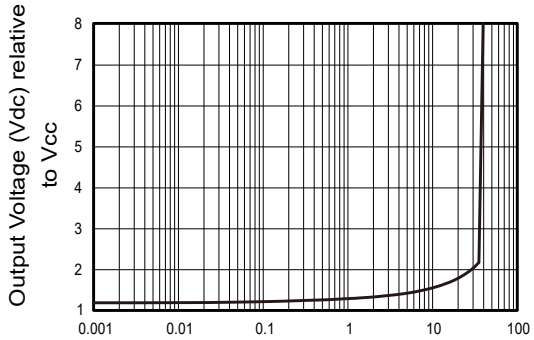

Figure 8: Output Sourcing Characteristics

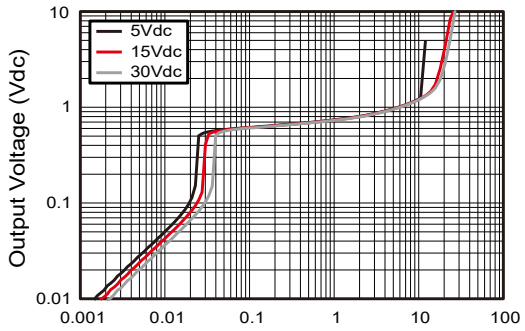

Figure 9: Output Sinking Characteristics

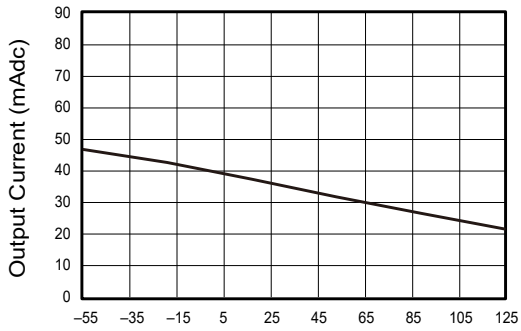

Figure 10: Source Current Limiting

7.Parameter Measurement Information

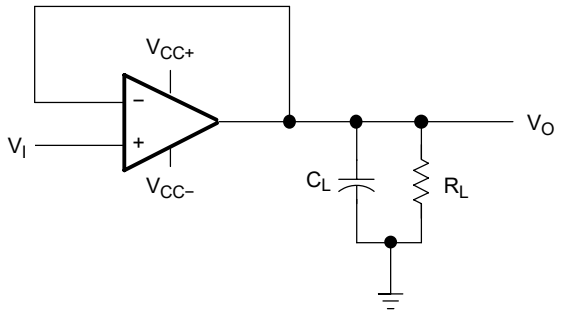

Figure 11: Unity-Gain Amplifier

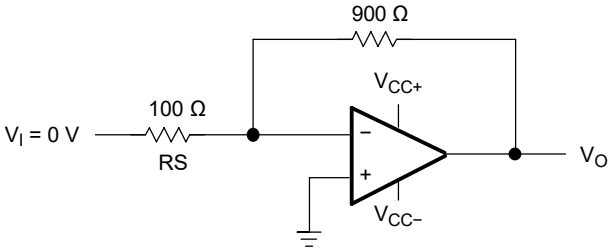

Figure 12: Noise-Test Circuit

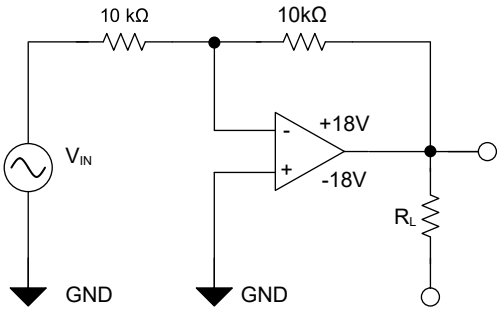

Figure 13: Test Circuit, G=-1, for THD+N and Small-Signal Step Response

8.SOP-8 Package Outline Dimensions

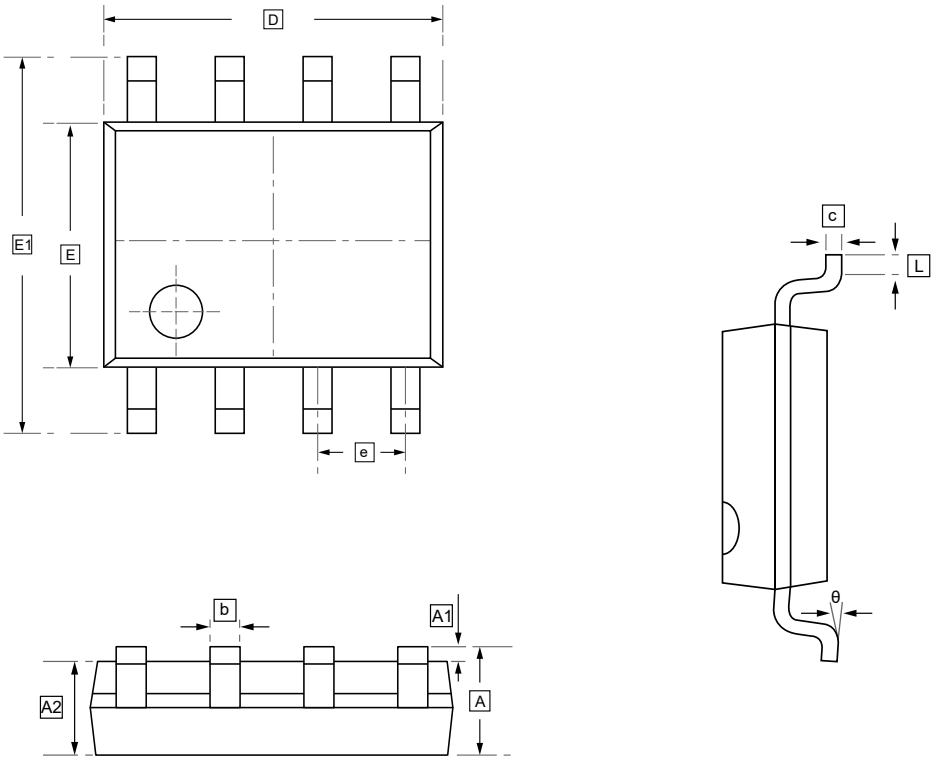

DIMENSIONS (mm are the original dimensions)

Symbol	A	A1	A2	b	c	D	E	E1	e	L	θ
Min	1.350	0.000	1.350	0.330	0.170	4.700	3.800	5.800	1.270	0.400	0°
Max	1.750	0.100	1.550	0.510	0.250	5.100	4.000	6.200	BSC	1.270	8°

9.Ordering Information

SOP-8

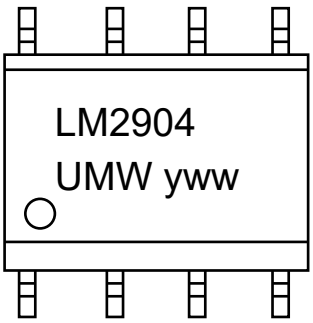

TSSOP-8

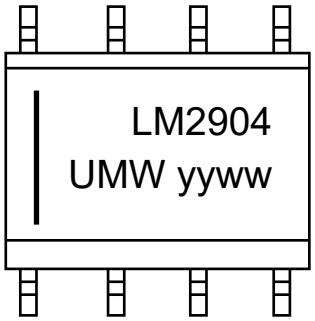

yy: Year Code
ww: Week Code

Order Code	Marking	Package	Base QTY	Delivery Mode
UMW LM2904DR	LM2904	SOP-8	2500	Tape and reel
UMW LM2904PWR	LM2904	TSSOP-8	4000	Tape and reel

10.Disclaimer

UMW reserves the right to make changes to all products, specifications. Customers should obtain the latest version of product documentation and verify the completeness and currency of the information before placing an order.

When applying our products, please do not exceed the maximum rated values, as this may affect the reliability of the entire system. Under certain conditions, any semiconductor product may experience faults or failures. Buyers are responsible for adhering to safety standards and implementing safety measures during system design, prototyping, and manufacturing when using our products to prevent potential failure risks that could lead to personal injury or property damage.

Unless explicitly stated in writing, UMW products are not intended for use in medical, life-saving, or life-sustaining applications, nor for any other applications where product failure could result in personal injury or death. If customers use or sell the product for such applications without explicit authorization, they assume all associated risks.

When reselling, applying, or exporting, please comply with export control laws and regulations of China, the United States, the United Kingdom, the European Union, and other relevant countries, regions, and international organizations.

This document and any actions by UMW do not grant any intellectual property rights, whether express or implied, by estoppel or otherwise. The product names and marks mentioned herein may be trademarks of their respective owners.