1.Description

The LM358 consists of two independent high-gain operational amplifiers. It can operate from either a single or dual power supply, and the current consumption is independent of the supply voltage. Applications include frequency converters, DC gain blocks, and all conventional operational amplifier circuits. Available in DIP8, SOP8, TSSOP-8 packages.

2.Features

- Single or Dual Supply Operation
- Two Internally Compensated Operational Amplifiers in One Package
- Matched Logic Circuits
- Low Power Consumption
- Wide Frequency Range

3.Pinning Information

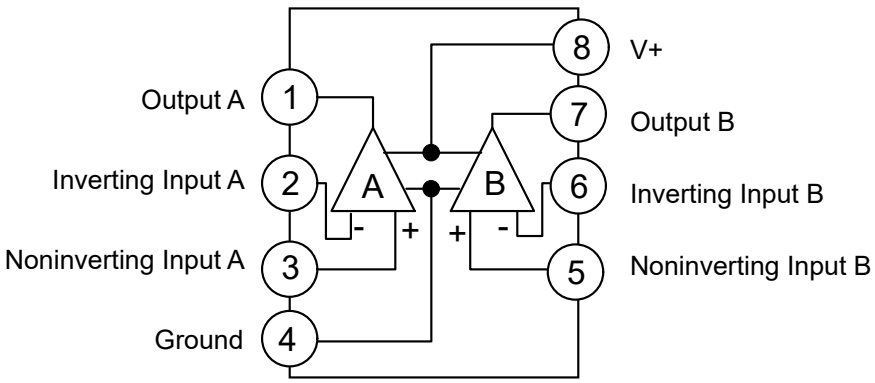

SOP-8

4.Absolute Maximum Ratings (T_A=25°C, unless otherwise specified)

Parameter		Value	Units
Supply Voltage		36 or ±18	V
Differential Input Voltage		±36	V
Input Voltage		-0.3 to 36	V
Power Dissipation (Note 1)	DIP package	550	mW
	SOP package	530	mW
Output Short-Circuit Current to Ground (1 Amplifier) (Note 2) (V + 15V, T_A=25°C)		Continuous	
Input Current (VIN<-0.3V) (Note 3)		50	mA
Operating Temperature		0 to 70	°C
Storage Temperature		-65 to 150	°C

5.Electrical Characteristics

LM358 (for V_S = (V+) - (V-) = 5.0V, T_A = 25°C, unless otherwise specified)

Parameter		Conditions		Min	Typ	Max	Units
Input offset voltage		T_A=25°C			2	5	mV
Input bias current		T_A=25°C, $I_{IN(+)}$ or $I_{IN(-)}$, V_{CM}=0V			45	150	nA
Input Offset Current		T_A=25°C, $I_{IN(+)}$ - $I_{IN(-)}$, V_{CM}=0V			3	30	nA
Input common mode voltage range		T_A=25°C, V^+=30V		0		V^+-1.5	V
Power supply current		R_L=∞	V^+=30V		1	2	mA
			V^+=5V		0.5	1.2	mA
Large Signal Voltage Gain		V^+=15V, T_A=25°C, R_L≥2kΩ (for V_O=1~11V)		50	100		V/mV
CMRR		DC, T_A=25°C, V_{CM}=0~V^+-1.5V		70	85		dB
PSRR		DC, T_A=25°C, V^+=5~30V		65	100		dB
Coupling system between amplifiers number		T_A=25°C, f=1~20kHz (all inputs)			-120		dB
Output source current		$V_{IN(+)}$=1V, $V_{IN(-)}$=0V, V^+=15V V_O=2V, T_A=25°C		20	40		mA
Output suction current		$V_{IN(-)}$=1V, $V_{IN(+)}$=0V, V^+=15V V_O=2V, T_A=25°C		10	20		mA
		$V_{IN(-)}$=1V, $V_{IN(+)}$=0V, V^+=15V V_O=200mV, T_A=25°C		12	50		µA
Short circuit current to ground		V^+=15V, T_A=25°C			40	60	mA
Output voltage swing	V_{OH}	V^+=30V	R_L=2kΩ	26			V
			R_L=10kΩ	27	28		V
	V_{OL}	V^+=5V, R_L=10kΩ			5	20	mV
The static current of each amplifier	I_Q	V_O=2.5V, I_O=0A	T_A=0~70°C		350	600	µA
		V_S=30V, V_O=15V, I_O=0A			500	1000	µA

Parameter		Conditions	Min	Typ	Max	Units
Slew rate	SR	V_{CC}^+=15V, V_i=0.5 to 3V, R_L=2 kΩ C_L=100pF, unity gain	0.3	0.6		V/μs
Gain bandwidth product	GBP	V_{CC}^+=30V, f=100kHz, V_{in}=10mV R_L=2kΩ, C_L=100pF	0.7	1.1		MHz
Total harmonic distortion	THD	f=1kHz, A_v=20dB, R_L=2kΩ, V_o=2V_{pp} C_L=100pF, V_O=2V_{pp}		0.02		%
Equivalent input noise voltage	e_n	f=1kHz, R_s=100Ω, V_{CC}^+=30V		55		nV/√Hz

6.Typical Application

Non-Inverting DC gain (0 V in = 0 V out)

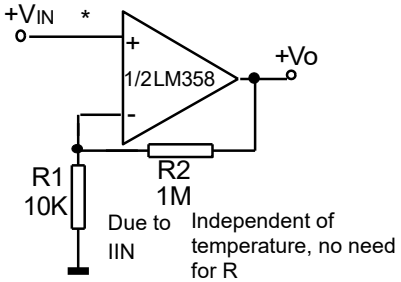

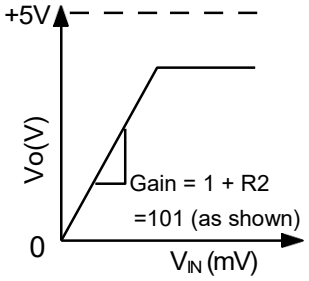

DC Summing Amplifier

（V INS ≥ 0V , and Vo ≥ 0V）

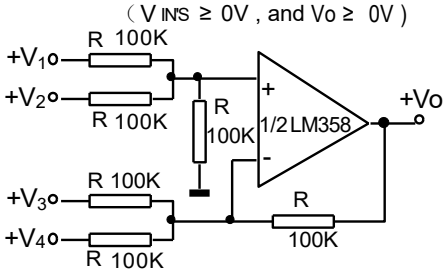

Where:To keep Vo> 0V, Vo=V 1+ V2 +V 3+ V4
(V1+V2)≥(V3+V4)

Power Amplifier

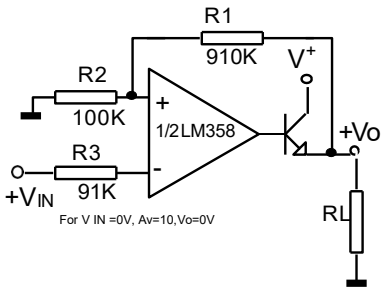

For V IN =0V, Av=10,Vo=0V

RC active bandpass filter

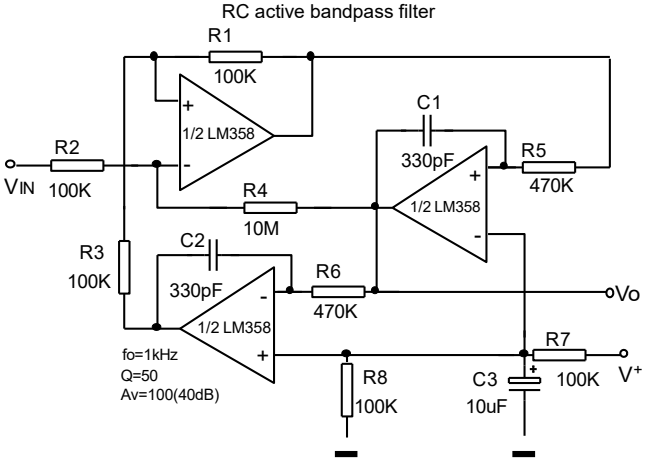

Fixed Current Source

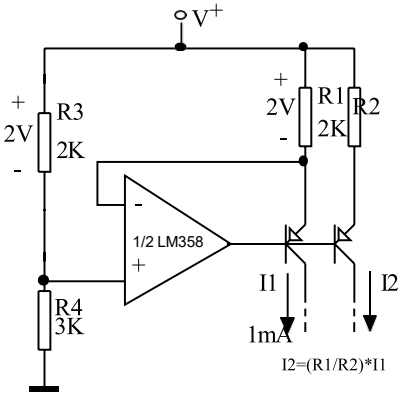

7.Typical Characterisitics

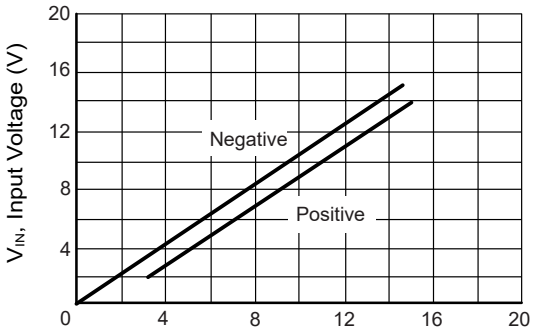

Figure 1: Input Voltage Range

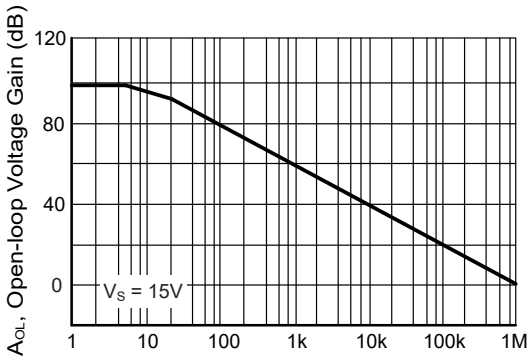

Figure 2: Large-Signal Open Loop Voltage Gain

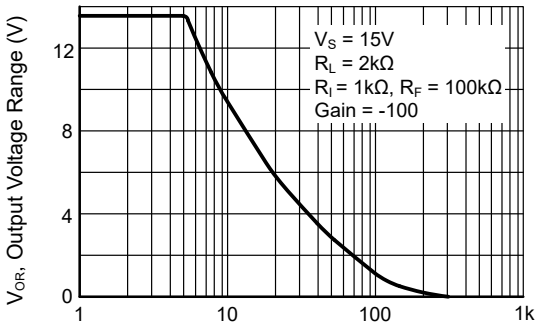

Figure 3: Large-Signal Frequency Response

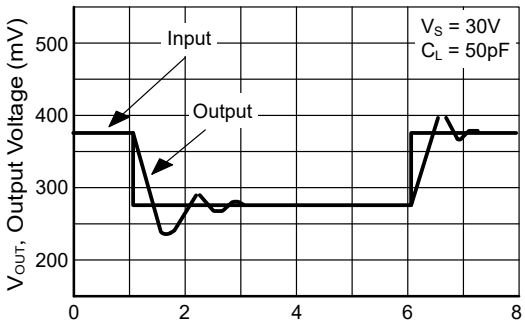

Figure 4: Small Signal Voltage Follower Pulse Response (Noninverting)

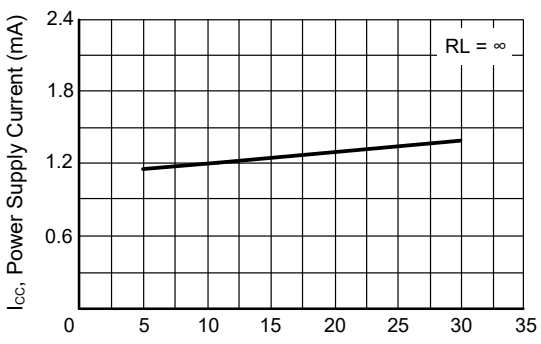

Figure 5: Power Supply Current



Figure 6: Input Bias Current

8.1 DIP-8 Package Outline Dimensions

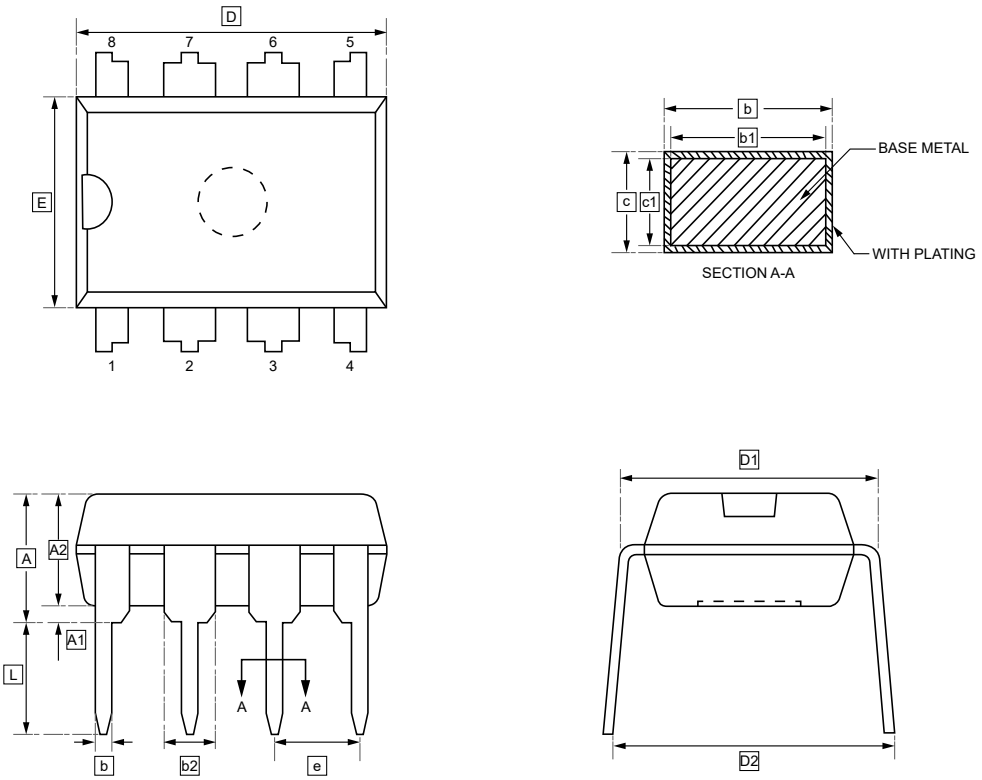

DIMENSIONS (mm are the original dimensions)

Symbol	A	A1	A2	b	b1	b2	c	c1	D	D1	D2	E
Min	3.60	0.45	3.20	0.42	0.41	1.52	0.24	0.23	9.15	7.62	7.62	6.10
Max	4.20	-	3.40	0.54	0.51	REF	0.30	0.28	9.40	REF	9.30	6.45

Symbol	e	L
Min	2.54	3.00
Max	BSC	3.40

8.2 SOP-8 Package Outline Dimensions

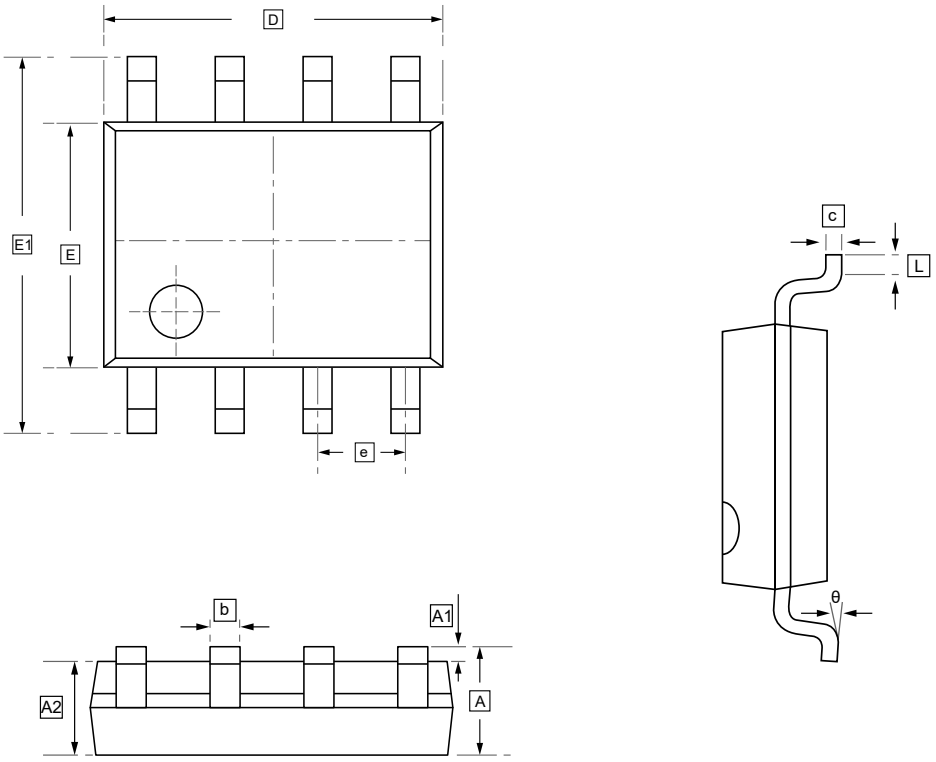

DIMENSIONS (mm are the original dimensions)

Symbol	A	A1	A2	b	c	D	E	E1	e	L	θ
Min	1.350	0.000	1.350	0.330	0.170	4.700	3.800	5.800	1.270	0.400	0°
Max	1.750	0.100	1.550	0.510	0.250	5.100	4.000	6.200	BSC	1.270	8°

8.3 TSSOP-8 Package Outline Dimensions

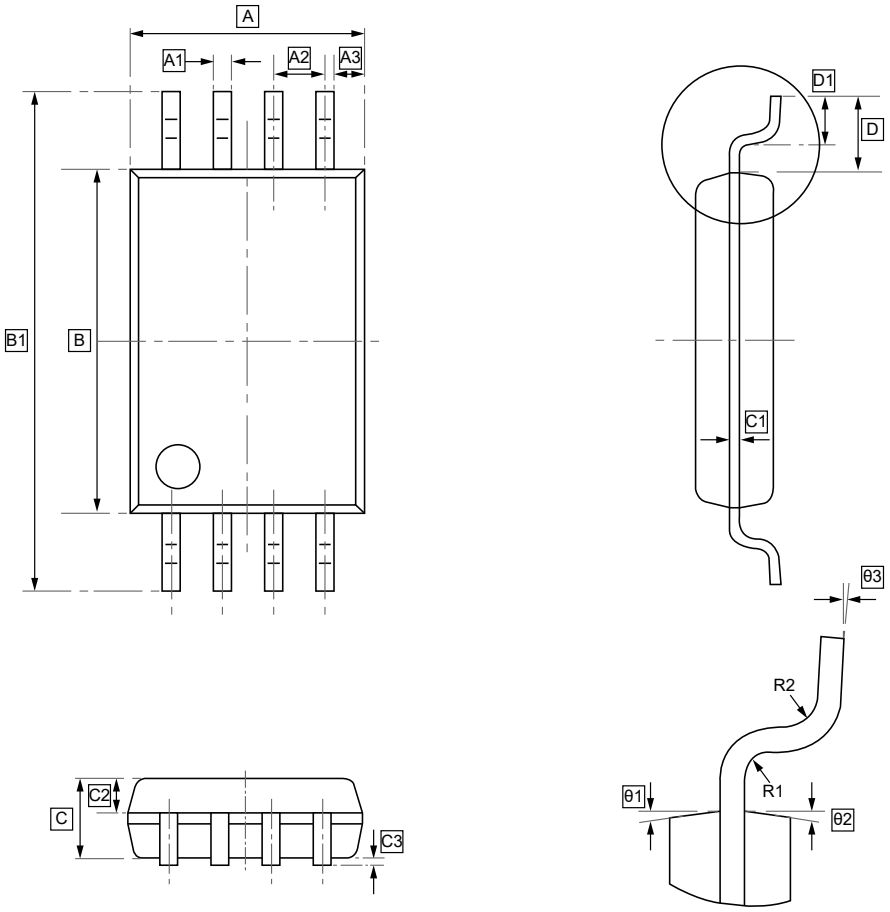

DIMENSIONS (mm are the original dimensions)

Symbol	A	A1	A2	A3	B	B1	C	C1	C2	C3	D	D1
Min	2.90	0.20	0.65	0.36	4.30	6.30	0.95	0.127	0.39	0.05	1.00	0.50
Max	3.10	0.30	TYP	0.46	4.50	6.50	1.05	TYP	0.49	0.15	REF	0.70

Symbol	R1	R2	θ1	θ2	θ3
Min	0.15	0.15	12°	12°	0°
Max	TYP	TYP	TYP4	TYP4	7°

9.Ordering Information

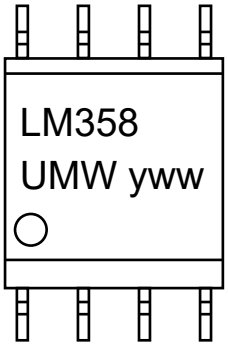

yww: Batch Code

Order Code	Marking	Package	Base QTY	Delivery Mode
UMW LM358ADR	LM358A	SOP-8	2500	Tape and reel
UMW LM358P	LM358	DIP-8	5000	Tape and reel
UMW LM358PWR	LM358	TSSOP-8	4000	Tape and reel

10.Disclaimer

UMW reserves the right to make changes to all products, specifications. Customers should obtain the latest version of product documentation and verify the completeness and currency of the information before placing an order.

When applying our products, please do not exceed the maximum rated values, as this may affect the reliability of the entire system. Under certain conditions, any semiconductor product may experience faults or failures. Buyers are responsible for adhering to safety standards and implementing safety measures during system design, prototyping, and manufacturing when using our products to prevent potential failure risks that could lead to personal injury or property damage.

Unless explicitly stated in writing, UMW products are not intended for use in medical, life-saving, or life-sustaining applications, nor for any other applications where product failure could result in personal injury or death. If customers use or sell the product for such applications without explicit authorization, they assume all associated risks.

When reselling, applying, or exporting, please comply with export control laws and regulations of China, the United States, the United Kingdom, the European Union, and other relevant countries, regions, and international organizations.

This document and any actions by UMW do not grant any intellectual property rights, whether express or implied, by estoppel or otherwise. The product names and marks mentioned herein may be trademarks of their respective owners.