1.Description

The LM75B is a fully integrated digital temperature sensor with a 12-bit ADC that can operate at a 1.8-V suppy, and is pin and register compatible with the mainstream x75.

The LM75B requires no external components to sense the temperature. The on-chip 12-bit ADC offers resolution down to 0.0625°C. Each chip is specially calibrated for ±1°C (max.) accuracy over -55°C to +125°C range in factory before shipment to customers, eliminating the need for users to make any additional adjustments for temperature output.

The LM75B features SMBus and I2C interface with speed up to 1MHz (2.3MHz at high-speed mode), and allows up to eight devices on the same bus. The programmable temperature limits and the ALT pin allow the sensor to operate as a stand-alone thermostat.

2.Features

- Operating Temperature : - 55°C ~ +125°C
- Accuracy : ±0.4°C typical. (-25°C ~ +55°C)
- Resolution : 12-bits (0.0625°C)
- Supply Voltage : 1.4V ~ 5.5V
- Conversion Time : 26ms
- Operating Current : 15μA @12Hz
- Shutdown Current : 0.3μA
- Digital Output : I2C, SMBus
- Alternative to x75

3.Applications

- Server and Computer Thermal Management
- Telecommunication Equipment
- Office Machines
- Video Game Consoles
- Set-Top Boxes
- Power Supply and Battery Thermal Protection
- Thermostat Control
- Environmental Monitoring and HVAC
- Electrical Motor Driver Thermal Protection
- Industrial Control

4.Block Diagram of LM75B

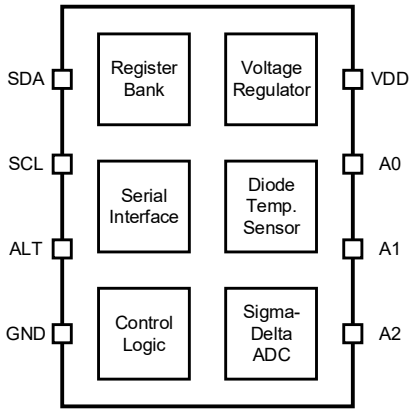

5.Pinning Information

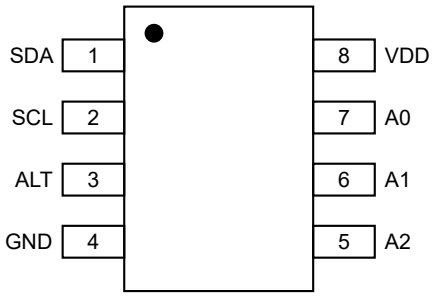

SOP-8/MSOP-8

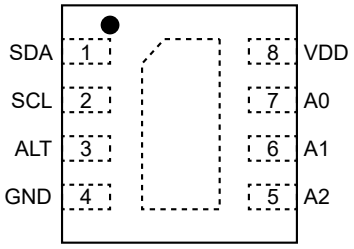

DFN-8

Pin Descriptions

Pin		Description
Name	NO.	
SDA	1	Serial data. Open-drain output.
SCL	2	Serial clock. Open-drain output.
ALT	3	Over-temperature alert. Open-drain output.
GND	4	Ground.
A2	5	Address select. Connect to GND or VDD.
A1	6	Address select. Connect to GND or VDD.
A0	7	Address select. Connect to GND or VDD.
VDD	8	Supply voltage : 1.4V~5.5V.

6.Absolute Maximum Ratings

Parameter	Min	Max	Unit
Supply Voltage, VDD	-0.3	6	V
Input Voltage, SCL, SDA, A2/A1/A0, ALT	-0.3	6	V
Operating Temperature	-55	150	°C
Junction Temperature		150	°C
Storage Temperature	-60	155	°C

Stresses beyond those listed under Absolute Maximum Ratings may cause permanent damage to the device.

7.ESD Ratings

Parameter		Value	Unit
Electrostatic Discharge	Human-body mode (HBM), per ANSI/ESDA/JEDEC JS-001-2017	±8000	V
	Charged-device model (CDM), per ANSI/ESDA/JEDEC JS-002-2022	±1400	V
	Machine mode (MM), per JEDEC EIA/JESD22-A115C	±200	V
Latch-up	Latch-up (LU), per JESD 78F (2022)	±200	mA

8.Recommended Operating Conditions

Parameter	Symbol	Min	Nom	Max	Unit
Supply Voltage	V_{DD}	1.4	3.3	5.5	V
Operating Temperature	T_A	-55		125	°C

Unless otherwise noted, the specifications in the above table apply within the atmospheric temperature range.

9.Electrical Characteristics

At T_A = -55°C to +125°C and V_{DD} = 1.4V to 5.5V, unless otherwise noted

Parameter	Conditions	Min	Typ	Max	Units
Temperature Range		-55		125	°C
Temperature Error	-25°C to +55°C		±0.4	±0.6	°C
	-55°C to +125°C		±0.6	±1	°C
Repeatability	-40°C to +125°C		±0.0625		°C
Supply Sensitivity	-40°C to +125°C		±0.0625	±0.1	°C/V
Resolution			0.0625		°C
			12		bits
Conversion Time			26	36	ms
Conversion Period			80		ms
Quiescent Current	Continuous mode, bus inactive		15	30	μA
Shutdown Current	Shutdown mode, bus inactive		0.3	6	μA
Bus Frequency	Fast mode	0.001		1	MHz
	High-Speed mode	0.001		2.3	MHz
Timeout Time		18	20	26	ms
Input Logic High Level		$0.7*V_{DD}$		V_{DD}	V
Input Logic Low Level		-0.3		$0.3*V_{DD}$	V
Output Logic Low Level	V_{DD}≥2V, I_{OL}=3mA			0.4	V
	V_{DD}<2V, I_{OL}=3mA			$0.2*V_{DD}$	V

10.Typical Characteristic

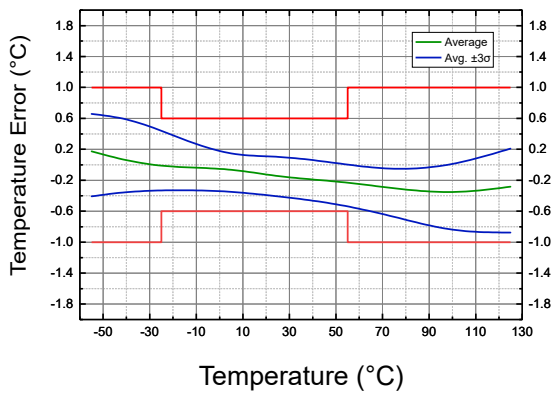

Figure 1: Temperature Error vs. Temperature (3.3V, MSOP-8 Package)

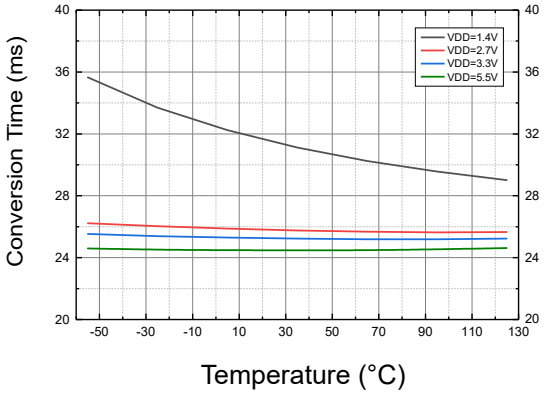

Figure 2: Conversion Time vs. Temperature

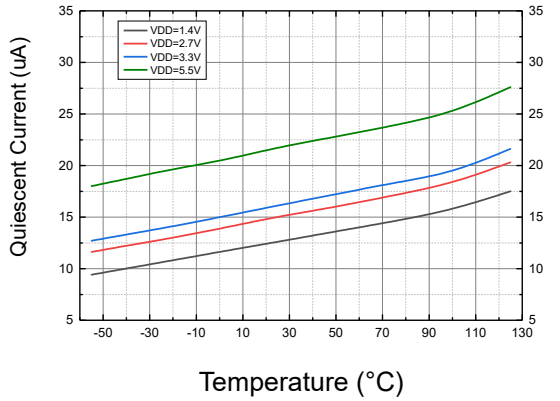

Figure 3: Quiescent Current vs. Temperature

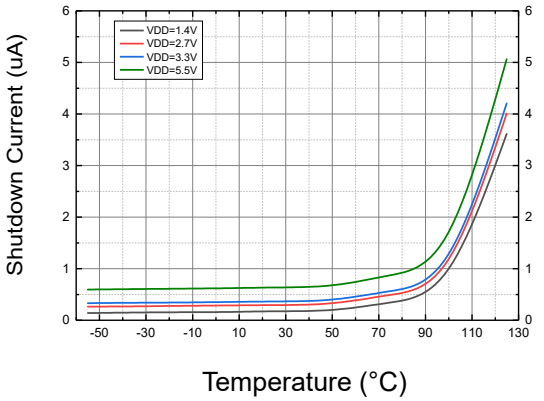

Figure 4: Shutdown Current vs. Temperature

11.Detailed Description

11.1 Temperature Output

The 12-bit digital output of each temperature measurement is saved in a read-only temperature register, where 1 LSB=0.0625°C and negative numbers are represented in binary complement form. When powered on or reset, the LM75B's temperature register is initialized to 0x0000 until the next temperature conversion is complete. Unused bits in the temperature register are always read as 0.A specific example is shown in Table 1.

Getting the temperature output requires reading two bytes, where byte 1 is a high significant byte (MSB),followed by byte 2 is a low significant byte (LSB). The left-justified high 12 bits are used to indicate temperature. If a temperature resolution of less than 1 °C is not required, the user can choose not to read bytes 2.

Table 1. Temperature Data Format

Temperature (°C)	Digital Output (Bin)	Digital Output (Hex)
128	0111 1111 1111 0000	0x7FF0
127.9375	0111 1111 1111 0000	0x7FF0
100	0110 0100 0000 0000	0x6400
80	0101 0000 0000 0000	0x5000
75	0100 1011 0000 0000	0x4B00
50	0011 0010 0000 0000	0x3200
25	0001 1001 0000 0000	0x1900
0.25	0000 0000 0100 0000	0x0040
0	0000 0000 0000 0000	0x0000
-0.25	1111 1111 1100 0000	0xFFC0
-25	1110 0111 0000 0000	0xE700
-55	1100 1001 0000 0000	0xC900

Note: Table 1 does not provide data formats for all temperatures.

11.2 Register Map

The LM75B internal register stack consists of four registers, and the mapping is shown in Table 2. Table 3, Table 4, Table 5, Table 6 and Table 7 describe the register contents.

Table 2. Register Map and Pointer Address

Pointer	Register	Type	Reset Value
0x00	Temperature	R	0x0000
0x01	Configuration	R/W	0x00
0x02	Low Limit	R/W	0x4B00
0x03	High Limit	R/W	0x5000

LEGEND : R/W = Read/Write; R = Read only.

Table 3. Temperature Register

Bit	15	14	13	12	11	10	9	8	7	6	5	4	3	2	1	0
Binary	T11	T10	T9	T8	T7	T6	T5	T4	T3	T2	T1	T0	-	-	-	-
Default	sign	64	32	16	8	4	2	1	2^{-1}	2^{-2}	2^{-3}	2^{-4}	0	0	0	0
Type	R	R	R	R	R	R	R	R	R	R	R	R	R	R	R	R

LEGEND : R/W = Read/Write; R = Read only; - = Reserved.

Table 4. Temperature Low Limit Register (T_{LOW})

Bit	15	14	13	12	11	10	9	8	7	6	5	4	3	2	1	0
Binary	L11	L10	L9	L8	L7	L6	L5	L4	L3	L2	L1	L0	-	-	-	-
Default	0	1	0	0	1	0	1	1	0	0	0	0	0	0	0	0
Type	R/W	R/W	R/W	R/W	R/W	R/W	R/W	R/W	R/W	R/W	R/W	R/W	R	R	R	R

LEGEND : R/W = Read/Write; R = Read only; - = Reserved.

Table 5. Temperature High Limit Register (T_{HIGH})

Bit	15	14	13	12	11	10	9	8	7	6	5	4	3	2	1	0
Binary	H11	H10	H9	H8	H7	H6	H5	H4	H3	H2	H1	H0	-	-	-	-
Default	0	1	0	1	0	0	0	0	0	0	0	0	0	0	0	0
Type	R/W	R/W	R/W	R/W	R/W	R/W	R/W	R/W	R/W	R/W	R/W	R/W	R	R	R	R

LEGEND : R/W = Read/Write; R = Read only; - = Reserved.

Table 6. Configuration Register

Bit	7	6	5	4	3	2	1	0
Binary	-	-	-	FQ1	FQ0	POL	TM	SD
Default	0	0	0	0	0	0	0	0
Type	R	R	R	R/W	R/W	R/W	R/W	R/W

LEGEND : R/W = Read/Write; R = Read only; - = Reserved.

Table 7. Configuration Register Field Descriptions

Field	Description
-	Reserved bits Write 0 to these bits on configuration register update.
FQ	Fault queue to trigger the ALT pin FQ=0x0: 1 fault (default) FQ=0x1: 2 faults FQ=0x2: 4 faults FQ=0x3: 6 faults
POL	ALT polarity control POL=0: ALT is active low (default) POL=1: ALT is active high
POL	ALT thermostat mode control TM=0: ALT is in comparator mode (default) TM=1: ALT is in interrupt mode
SD	Shutdown control SD=0: Device is in continuous conversion mode (default) SD=1: Device is in shutdown mode

11.3 Functional Modes

11.3.1 Continuous Mode

The default mode of the LM75B is continuous conversion, where the ADC performs continuous temperature conversions and stores each result to the Temperature register, overwriting the result from the previous conversion. The typical conversion rate of LM75B is 12 Hz, with 80 ms between the start of each consecutive conversion. The LM75B has a typical conversion time of 26 ms. To achieve its conversion rates, the LM75B makes a conversion, and then powers down and waits for a delay 54 ms.

After power-up, the LM75B immediately starts a conversion, as shown in Figure 1. The first result is available after 26 ms (typical). The active quiescent current during conversion is 40 µA (typical at +25°C). The quiescent current during delay is 3 µA (typical at +25°C).

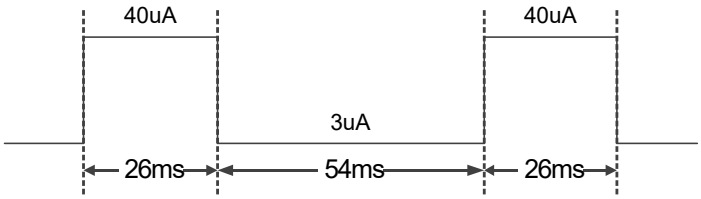

Figure 1. Conversion Diagram

11.3.2 Shutdown Mode

The shutdown mode saves maximum power by shutting down all device circuitry other than the serial interface, and reduces current consumption to typically less than 0.3 μA. Shutdown mode is enabled when the SD bit in the configuration register is set to 1; the device shuts down and terminates a conversion if it is ongoing.

11.4 Overtemperature Alert

11.4.1 Comparator Mode

The LM75B defaults to comparator mode. In this mode, the ALT pin becomes active when the temperature is equal to or exceeds the value in T_{HIGH} for a consecutive number of conversions as set by the FQ bits of the configuration register. ALT clears when the temperature falls below T_{LOW} for the same consecutive number of conversions. The difference between the two limits acts as a hysteresis on the comparator output, and a fault counter prevents false alerts as a result of environmental noise.

11.4.2 Interrupt Mode

In this mode, the ALT pin becomes active when the temperature equals or exceeds the value in T_{HIGH} for a consecutive number of fault conditions. The ALT pin remains active until a read operation of any register occurs. After the ALT pin is cleared, this pin becomes active again only when temperature falls below T_{LOW} for a consecutive number of fault conditions, and remains active until cleared by a read operation of any register. The cycle repeats with the ALT pin becoming active when the temperature equals or exceeds T_{HIGH}, and so on. The ALT pin is cleared also when the device is placed in shutdown mode. This action also clears the fault counter memory.

The operation of the ALT pin in the various modes is illustrated in Figure 2.

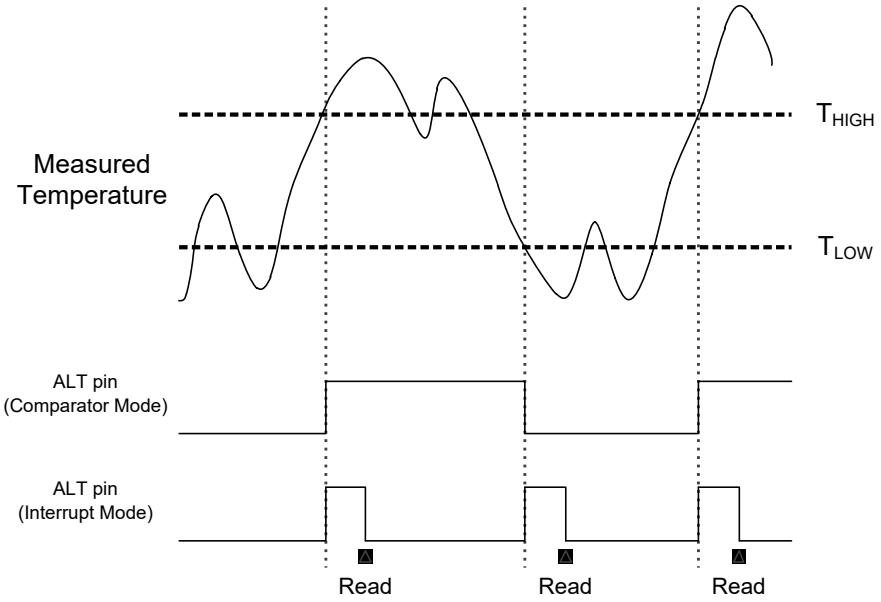

Figure 2. ALT Pin Modes of Operation

11.5 Serial Interface

11.5.1 Bus Overview

I²C/SMBus is a two-wire serial communication interface supporting multi-master and multi-slave. The device that initiates the communication is called the master, and the device controlled by the master is called the slave. The master is responsible for generating the serial clock (SCL) and controlling the bus access.

Data transfer is sent over eight clock pulses followed by an acknowledge bit. During data transfer, SDA must remain stable when SCL is high because any change in SDA while SCL is high is interpreted as a START or STOP conditions. Parameters for Figure 3 are defined in Table 8.

Table 8. Timing Diagram Requirements

Symbol	Parameter	Fast Mode		High-speed		Unit
		Min	Max	Min	Max	
f_{SCL}	SCL operating frequency	1	400	1	2300	kHz
$t_{SU:STA}$	Repeated START condition setup	0.6	-	0.26	-	us
$t_{HD:STA}$	Repeated START condition hold	0.6	-	0.26	-	us
$t_{SU:STO}$	STOP condition setup time	0.6	-	0.26	-	us
t_{BUF}	Bus free time between SToP and	1.3	-	0.5	-	us
$t_{SU:DAT}$	Data setup time	0.1	-	0.05	-	us
$t_{HD:DAT}$	Data hold time	0	-	0	-	us
t_{HIG}	SCL clock high period	0.6	-	0.26	-	us
t_{LOW}	SCL clock low period	1.3	-	0.5	-	us
t_R	Clock and data rise time	-	300	-	120	ns
t_F	Clock and data fall time	-	300	-	120	ns

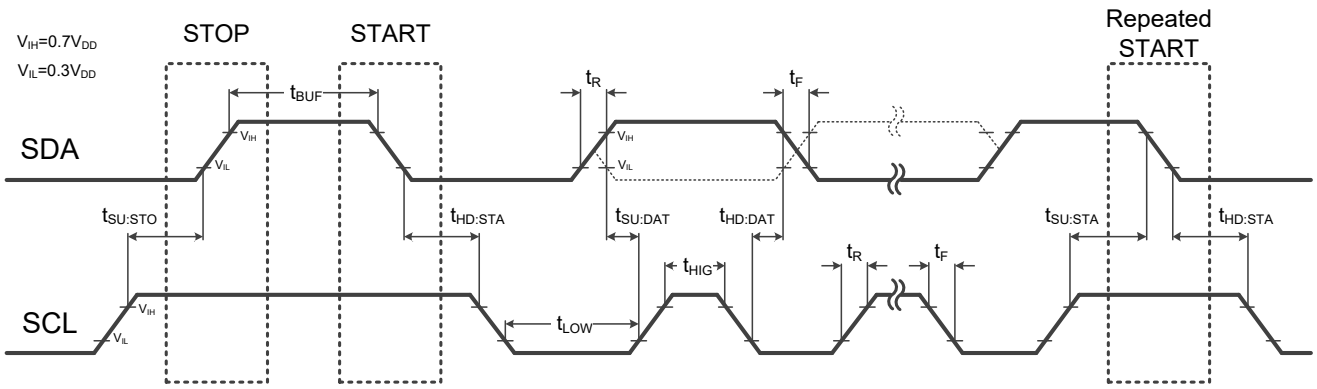

Figure 3. Two-Wire Timing Diagram

11.5.2 Serial Bus Address

The LM75B features three address pins that allow up to eight devices to be addressed on a single bus. Table 9 describes the pin logic levels and the corresponding address values. It is crucial for the logic level of the address pin to remain consistent throughout communication in order to avoid potential failures. The address pin must be connected either to VDD or GND and should not be left in a suspended state.

The slave address byte consists of seven address bits, and a direction bit indicating the intent of executing either a read or write operation. All data bytes are transmitted MSB first.

Table 9. Address Pin Connection and Slave Address

A2	A1	A0	Device Two-wire Address
GND	GND	GND	0x90 (write) 0x91 (read)
GND	GND	VDD	0x92 (write) 0x93 (read)
GND	VDD	GND	0x94 (write) 0x95 (read)
GND	VDD	VDD	0x96 (write) 0x97 (read)
VDD	GND	GND	0x98 (write) 0x99 (read)
VDD	GND	VDD	0x9A (write) 0x9B (read)
VDD	VDD	GND	0x9C (write) 0x9D (read)
VDD	VDD	VDD	0x9E (write) 0x9F (read)

11.5.3 Writing and Reading Operation

Accessing a particular register on the LM75B is accomplished by writing the appropriate value to the pointer register. The value for the pointer register is the first byte transferred after the slave address byte with the R/W bit low. Every write operation to the LM75B requires a value for the pointer register (see Figure 4).

When reading from the LM75B, the last value stored in the pointer register by a write operation is used to determine which register is read by a read operation. To change the register pointer for a read operation, a new value must be written to the pointer register. This action is accomplished by issuing a slave address byte with the R/W bit low, followed by the pointer register byte. No additional data are required. The master can then generate a start condition and send the slave address byte with the R/W bit high to initiate the read command. See Figure 5 for details of this sequence. If repeated reads from the same register are desired, there is no need to continually send the pointer register bytes because the LM75B stores the pointer register value until it is changed by the next write operation.

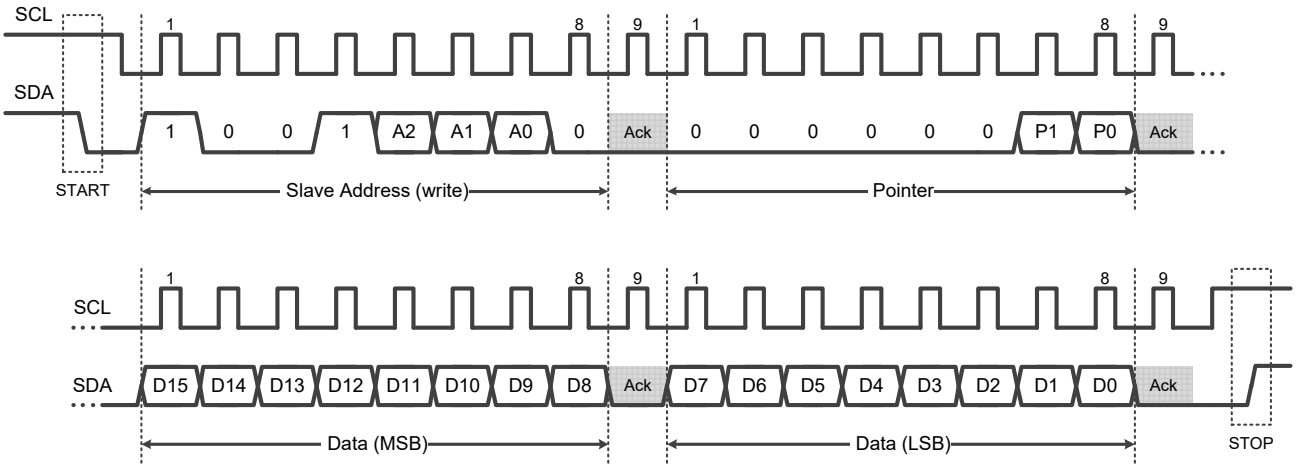

Figure 4. Two-Wire Timing Diagram for Write Word Format

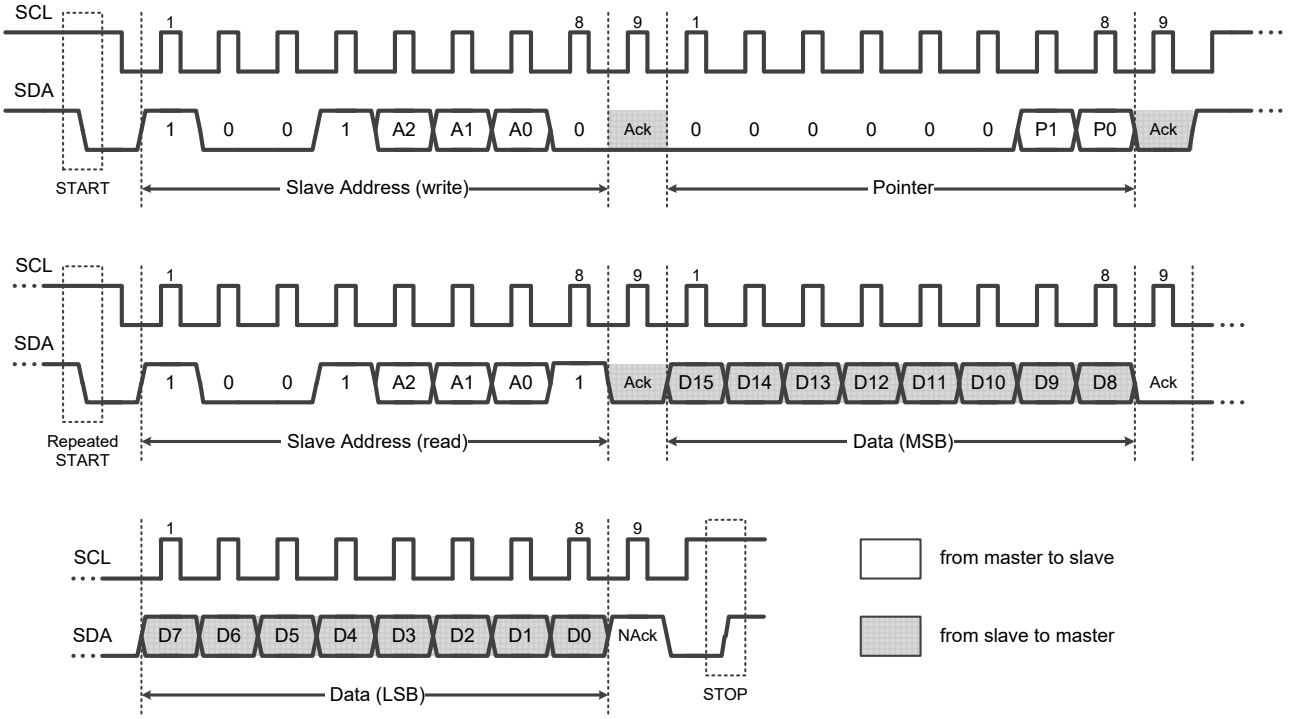

Figure 5. Two-Wire Timing Diagram for Read Word Format

11.5.4 Time-Out Function

The LM75B resets the serial interface if SCL or SDA are held low for 20 ms (typ) between a start and stop condition. If the LM75B is pulled low, it releases the bus and then waits for a start condition. To avoid activating the timeout function, it is necessary to maintain a communication speed of at least 1 kHz for the SCL operating frequency.

11.5.5 High-Speed Mode

In order for the I²C bus to operate at frequencies above 400 kHz, the master device must issue an Hs-mode code (00001xxx) as the first byte after a start condition to switch the bus to high-speed operation. The LM75B does not acknowledge this byte, but does switch its input filters on SDA and SCL and its output filters on SDA to operate in Hs-mode, allowing transfers at up to 2.3 MHz. After the Hs-mode code has been issued, the master transmits a slave address to initiate a data-transfer operation. The bus continues to operate in Hs-mode until a stop condition occurs on the bus. Upon receiving the stop condition, the LM75B switches the input and output filters back to fast-mode operation. (see Figure 6)

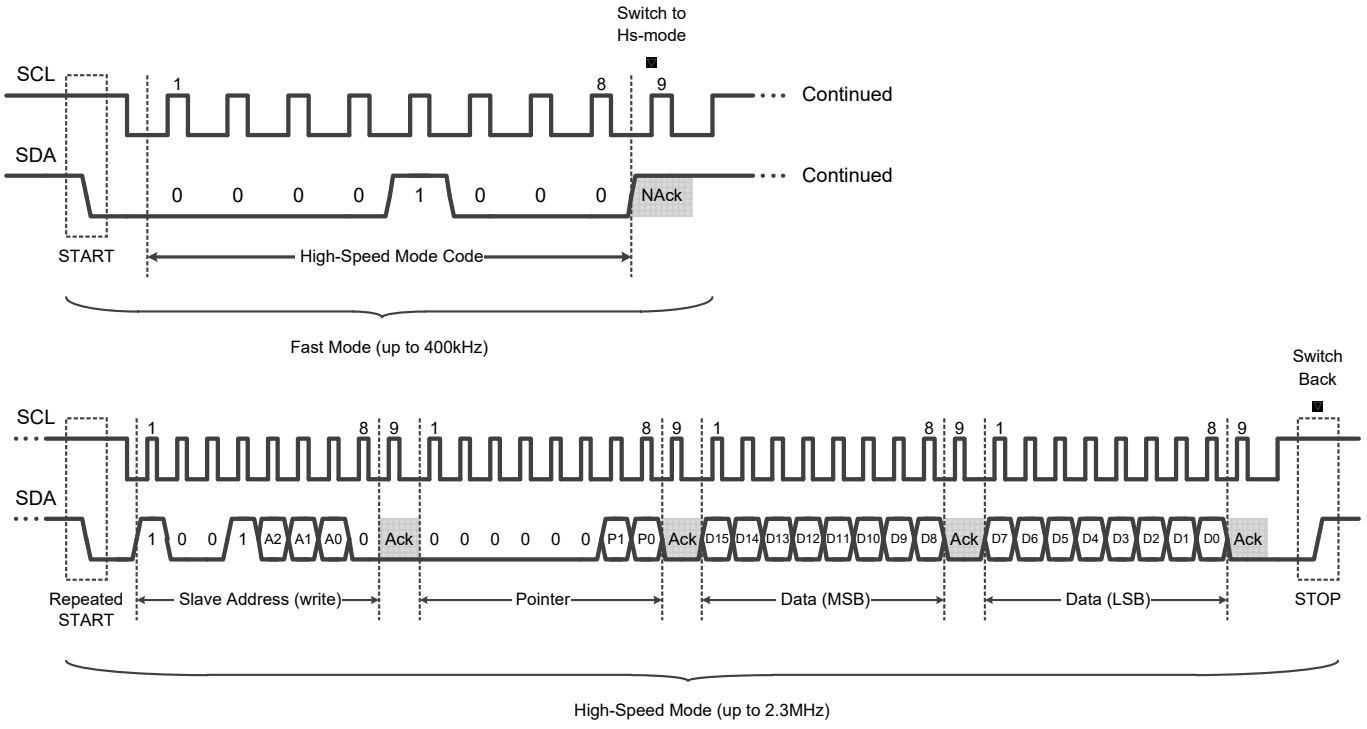

Figure 6. Two-Wire Timing Diagram for Write Word Format in High-Speed Mode

12.Specific Applications

NOTE

The following contents are the precautions and usage suggestions for LM75B in specific applications by Beijing Galaxy-CAS Technology Co., Ltd. which does not make promises about its accuracy or completeness. Customers are responsible for determining suitability of components for their purposes based on their own usage needs and application scenarios. Customers should test and verify their design implementation to confirm system functionality and avoid losses.

12.1 Power Supply Recommendations

The LM75B has an extremely low average power consumption, so an RC filter circuit can be added to the power supply pin to further reduce the impact of power supply noise. As shown in Figure 7, the resistance must be less than 1kΩ, the capacitance must be greater than 0.1uF, and the power supply voltage cannot be lower than 1.4V.

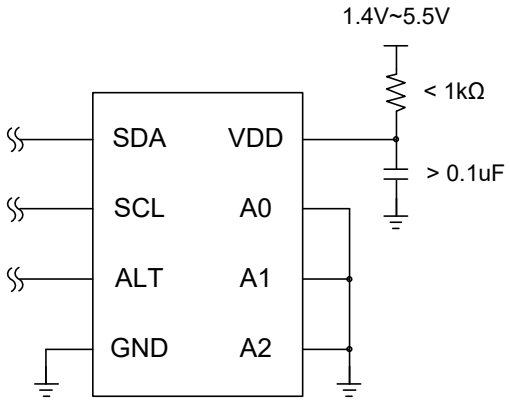

Figure 7. Noise Reduction Techniques

12.2 Layout Guidelines

Place the device as far away as possible from noise sources such as high-speed digital buses, coil elements and wireless antennas. Place the power-supply bypass capacitor as close as possible to the supply and ground pins. The recommended value of this bypass capacitor is 0.1uF. For severe noise environments, LMCAS recommends the use of multiple different capacitance values in parallel, such as 1uF+0.1uF+0.01uF, etc., so as to filter out digital noise in multiple frequency ranges.

Place the device in close proximity to the heat source that must be monitored, with a proper layout for good thermal coupling. This placement verifies that temperature changes are captured within the shortest possible time interval. The average power consumption is extremely low, and the self-heating effect is negligible.

13.1 SOP8 Package Outline Dimensions

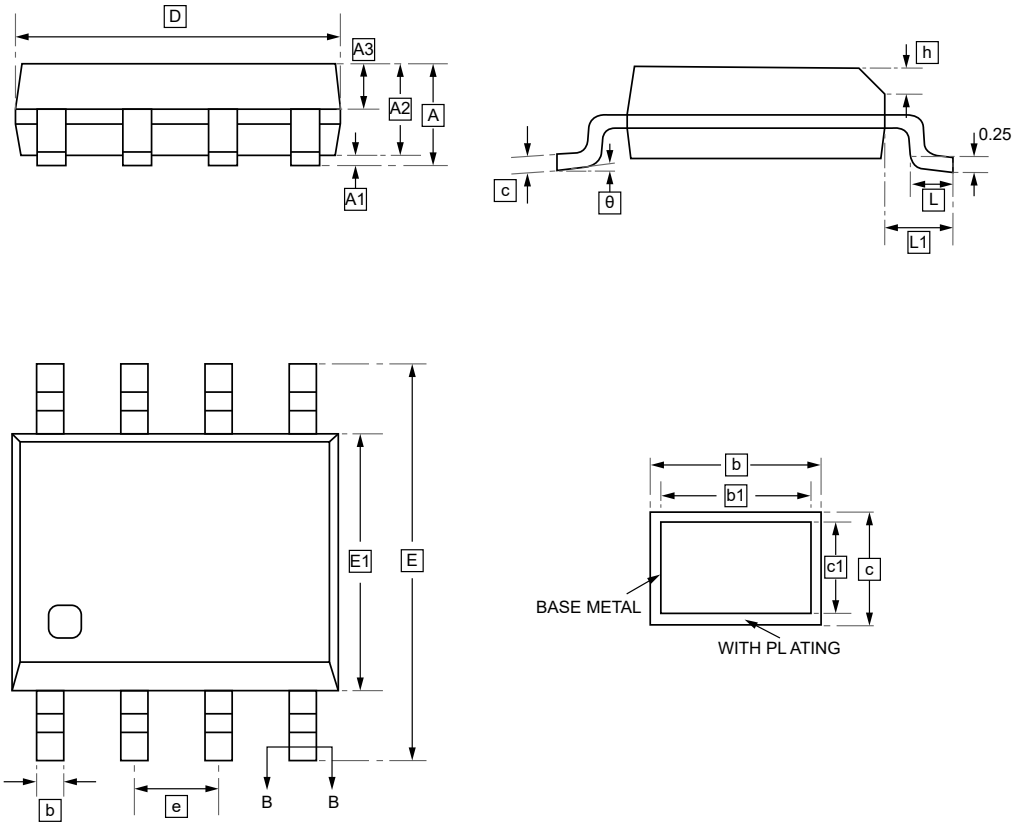

DIMENSIONS (mm are the original dimensions)

Symbol	A	A1	A2	A3	b	b1	c	c1	D	E	E1	e
Min	-	0.10	1.30	0.60	0.39	0.38	0.20	0.19	4.80	5.80	3.80	1.27
Max	1.75	0.225	1.50	0.70	0.47	0.44	0.24	0.21	5.00	6.20	4.00	BSC

Symbol	h	L	L1	θ
Min	0.25	0.50	1.05	0°
Max	0.50	0.80	REF	8°

13.2 MSOP-8 Package Outline Dimensions

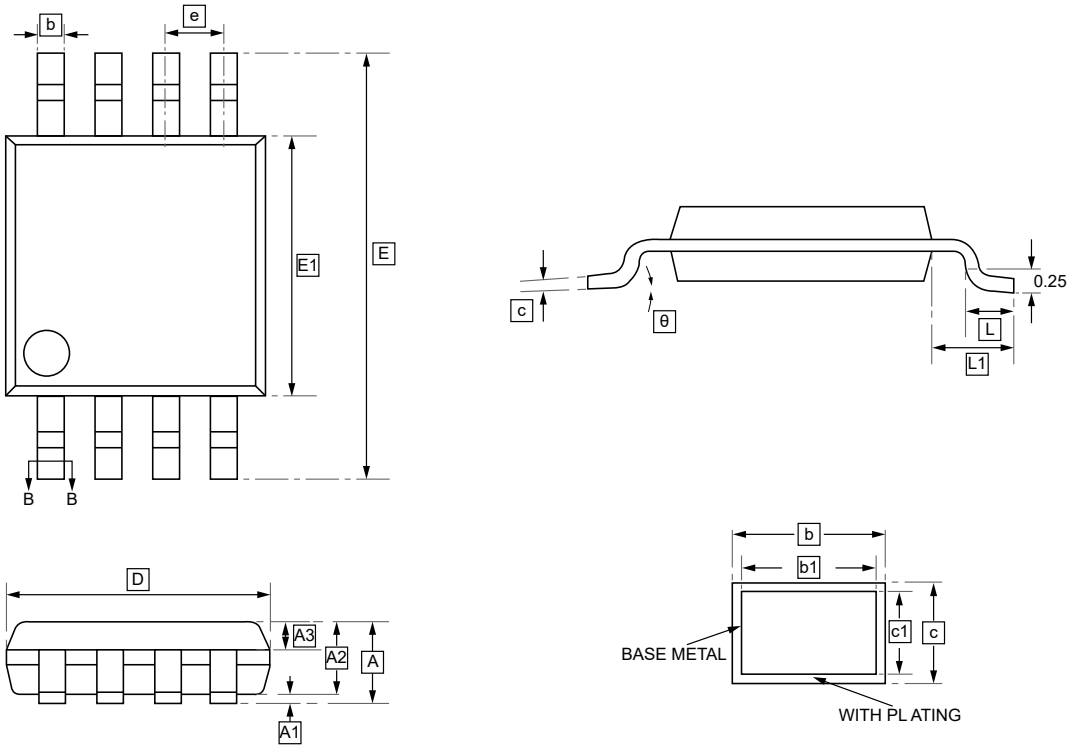

DIMENSIONS (mm are the original dimensions)

Symbol	A	A1	A2	A3	b	b1	c	c1	D	E	E1	e
Min	-	0.05	0.75	0.30	0.28	0.27	0.15	0.14	2.90	4.70	2.90	0.65
Max	1.10	0.15	0.95	0.40	0.36	0.33	0.19	0.16	3.10	5.10	3.10	BSC

Symbol	L	L1	θ
Min	0.40	0.95	0°
Max	0.70	REF	8°

14.Ordering Information

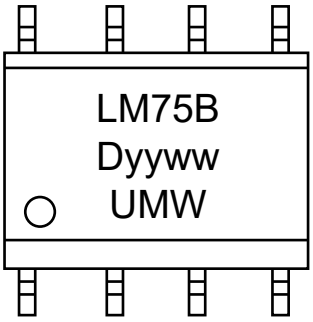

yy: Year Code
ww: Week Code

Order Code	Marking	Package	Base QTY	Delivery Mode
UMW LM75BD	LM75B D	SOP8	4000	Tape and reel
UMW LM75BDP	LM75B	MSOP8	4000	Tape and reel

15.Disclaimer

UMW reserves the right to make changes to all products, specifications. Customers should obtain the latest version of product documentation and verify the completeness and currency of the information before placing an order.

When applying our products, please do not exceed the maximum rated values, as this may affect the reliability of the entire system. Under certain conditions, any semiconductor product may experience faults or failures. Buyers are responsible for adhering to safety standards and implementing safety measures during system design, prototyping, and manufacturing when using our products to prevent potential failure risks that could lead to personal injury or property damage.

Unless explicitly stated in writing, UMW products are not intended for use in medical, life-saving, or life-sustaining applications, nor for any other applications where product failure could result in personal injury or death. If customers use or sell the product for such applications without explicit authorization, they assume all associated risks.

When reselling, applying, or exporting, please comply with export control laws and regulations of China, the United States, the United Kingdom, the European Union, and other relevant countries, regions, and international organizations.

This document and any actions by UMW do not grant any intellectual property rights, whether express or implied, by estoppel or otherwise. The product names and marks mentioned herein may be trademarks of their respective owners.