UMW NUP1301

1.Description

NUP1301 is a MicroIntegration device designed to provide protection for sensitive components from possible harmful electrical transients; for example, ESD (electrostatic discharge).

2.Applications

- T1/E1 Secondary IC Protection
- T3/E3 Secondary IC Protection
- HDSL, IDSL Secondary IC Protection
- Video Line Protection
- Microcontroller Input Protection
- Base Stations
- I^2C Bus Protection

3.Features

- Low Capacitance (0.9 pF Maximum)
- Single Package Integration Design
- Provides ESD Protection for JEDEC Standards JESD22
  Machine Model = Class C
  Human Body Model = Class 3B
- Protection for IEC61000−4−2 (Level 4)
  8.0 kV (Contact) 15 kV (Air)
- Ensures Data Line Speed and Integrity
- Fewer Components and Less Board Space
- Direct the Transient to Either Positive Side or to the Ground
- SZ Prefix for Automotive and Other Applications Requiring Unique Site and Control Change Requirements; AEC−Q101 Qualified and PPAP Capable
- Pb−Free Package is Available

4.Pinning information

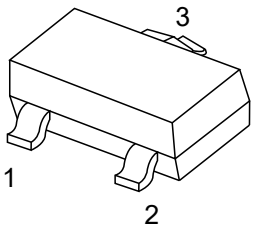

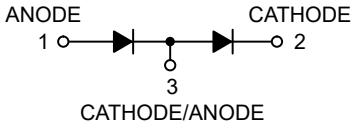

SOT-23

5.Absolute Maximum Ratings (T_J=25°C, unless otherwise specified)

Parameter	Symbol	Value	Units
Reverse Voltage	V_R	70	V
Forward Current	I_F	215	mA
Peak Forward Surge Current	$I_{FM(surge)}$	500	mA
Repetitive Peak Reverse Voltage	V_{RRM}	70	V
Average Rectified Forward Current(Note 1,averaged over any 20 ms period)	$I_{F(AV)}$	715	mA
Repetitive Peak Forward Current	I_{FRM}	450	mA
Non−Repetitive Peak Forward Current t=1.0μs	I_{FSM}	2	A
t=1.0ms		1	A
t=1.0S		0.5	A

Notes:

Stresses exceeding those listed in the Maximum Ratings table may damage the device. If any of these limits are exceeded, device functionality should not be assumed, damage may occur and reliability may be affected.

1. FR−5 = 1.0 × 0.75 × 0.062 in.

6.Thermal Characteristics

Parameter	Symbol	Value	Units
Thermal Resistance Junction−to−Ambient	$R_{\theta JA}$	625	°C/W
Lead Solder Temperature Maximum 10 Seconds Duration	T_L	260	°C
Junction Temperature	T_J	-65 to 150	°C
Storage Temperature	T_{STG}	-65 to 150	°C

7.Electrical Characteristic (T_J=25°C unless otherwise noted)

Parameter	Symbol	Conditions	Min	Typ	Max	Units
Reverse Breakdown Voltage	V_{RWM}	$I_{(BR)}$=100μA	70			V
Reverse Voltage Leakage Current	I_R	V_R=70V			2.5	μA
		V_R=25V, T_J=150°C			30	μA
		V_R=70V, T_J=150°C			50	μA
Diode Capacitance (between I/O and ground)	C_D	V_R=0, f=1MHz)			0.9	pF
Forward Voltage	V_F	I_F=1mA			715	mV
		I_F=10mA			855	mV
		I_F=50mA			1000	mV
		I_F=150mA			1250	mV

Notes:

Product parametric performance is indicated in the Electrical Characteristics for the listed test conditions, unless otherwise noted. Product performance may not be indicated by the Electrical Characteristics if operated under different conditions.

2. FR−5 = 1.0 × 0.75 × 0.062 in.

3. Alumina = 0.4 × 0.3 × 0.024 in, 99.5% alumina.

4. Include SZ-prefix devices where applicable.

8.Typical characteristic



Figure 1. ESD Test Circuit

Electrostatic Discharge

A common means of protecting high−speed data lines is to employ low−capacitance diode arrays in a rail−to−rail configuration. Two devices per line are connected between two fixed voltage references such as VCC and ground. When the transient voltage exceeds the forward voltage (VF) drop of the diode plus the reference voltage, the diodes direct the surge to the supply rail or ground. This method has several advantages including low loading capacitance, fast response time, and inherent bidirectionality (within the reference voltages). See Figure 1 for the test circuit used to verify the ESD rating for this device.

9.SOT-23 Package Outline Dimensions

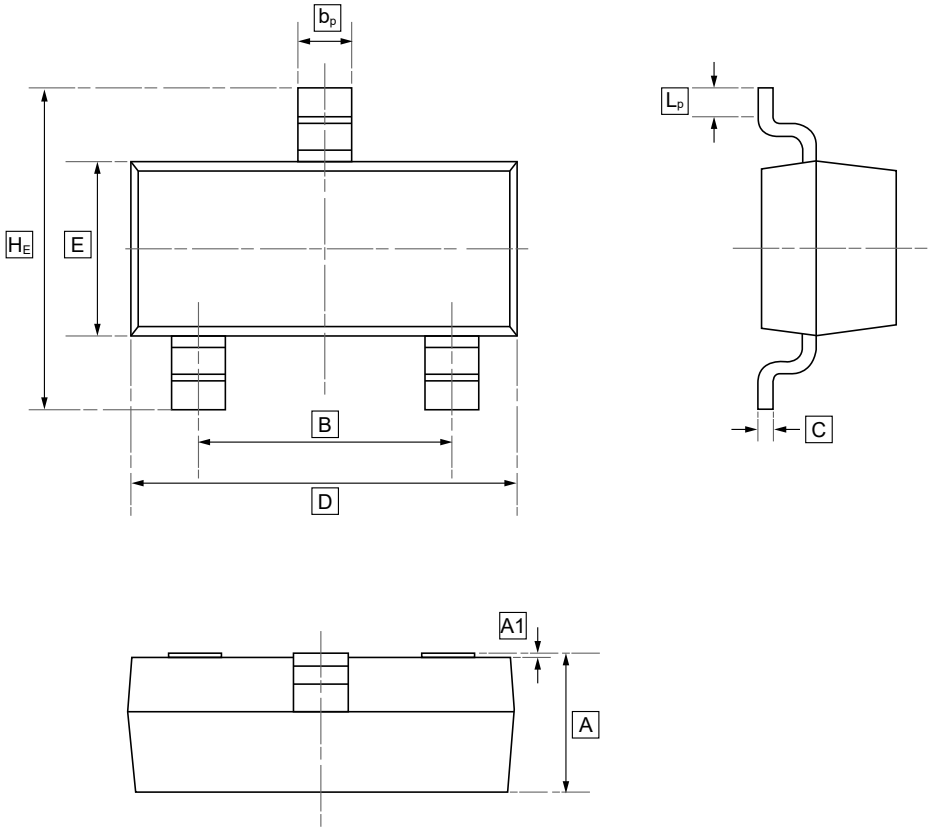

DIMENSIONS (mm are the original dimensions)

Symbol	A	B	b_p	C	D	E	H_E	A1	L_p
Min	0.95	1.78	0.35	0.08	2.70	1.20	2.20	0.013	0.20
Max	1.40	2.04	0.50	0.19	3.10	1.65	3.00	0.100	0.50

10.Ordering information

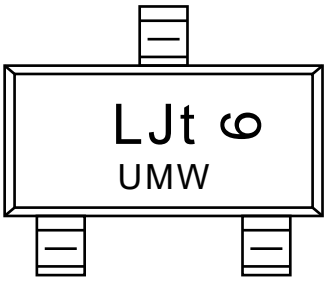

Order Code	Package	Base QTY	Delivery Mode
UMW NUP1301	SOT-23	3000	Tape and reel

11.Disclaimer

UMW reserves the right to make changes to all products, specifications. Customers should obtain the latest version of product documentation and verify the completeness and currency of the information before placing an order.

When applying our products, please do not exceed the maximum rated values, as this may affect the reliability of the entire system. Under certain conditions, any semiconductor product may experience faults or failures. Buyers are responsible for adhering to safety standards and implementing safety measures during system design, prototyping, and manufacturing when using our products to prevent potential failure risks that could lead to personal injury or property damage.

Unless explicitly stated in writing, UMW products are not intended for use in medical, life-saving, or life-sustaining applications, nor for any other applications where product failure could result in personal injury or death. If customers use or sell the product for such applications without explicit authorization, they assume all associated risks.

When reselling, applying, or exporting, please comply with export control laws and regulations of China, the United States, the United Kingdom, the European Union, and other relevant countries, regions, and international organizations.

This document and any actions by UMW do not grant any intellectual property rights, whether express or implied, by estoppel or otherwise. The product names and marks mentioned herein may be trademarks of their respective owners.