UMW OP07

Low offset single operational amplifier

1.Description

OP07C is a high precision operational amplifier, and its maximum offset voltage is controlled at 150uV. The gain reaches 200V/mV. Therefore, OP07C is especially suitable for instruments and other aspects.OP07C has a wide input voltage range.(±13V), and the common mode rejection ratio (CMRR) of more than 100DB, which also maintains excellent linearity and gain accuracy in high closed loop gain circuits.

2.Features

- Maximum offset voltage 150uV MAX
- Low offset current Iio=1.3nA typ
- The working voltage range is ±3V to ±20V

3.Pin information

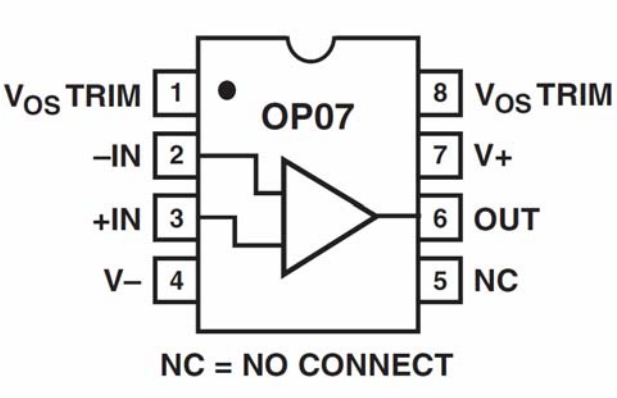

SOP-8

4.Input offset zeroing circuit

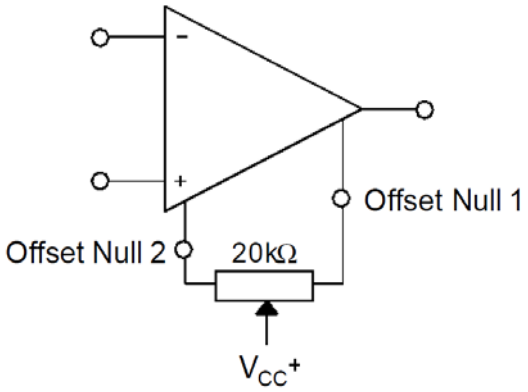

5.Block graph

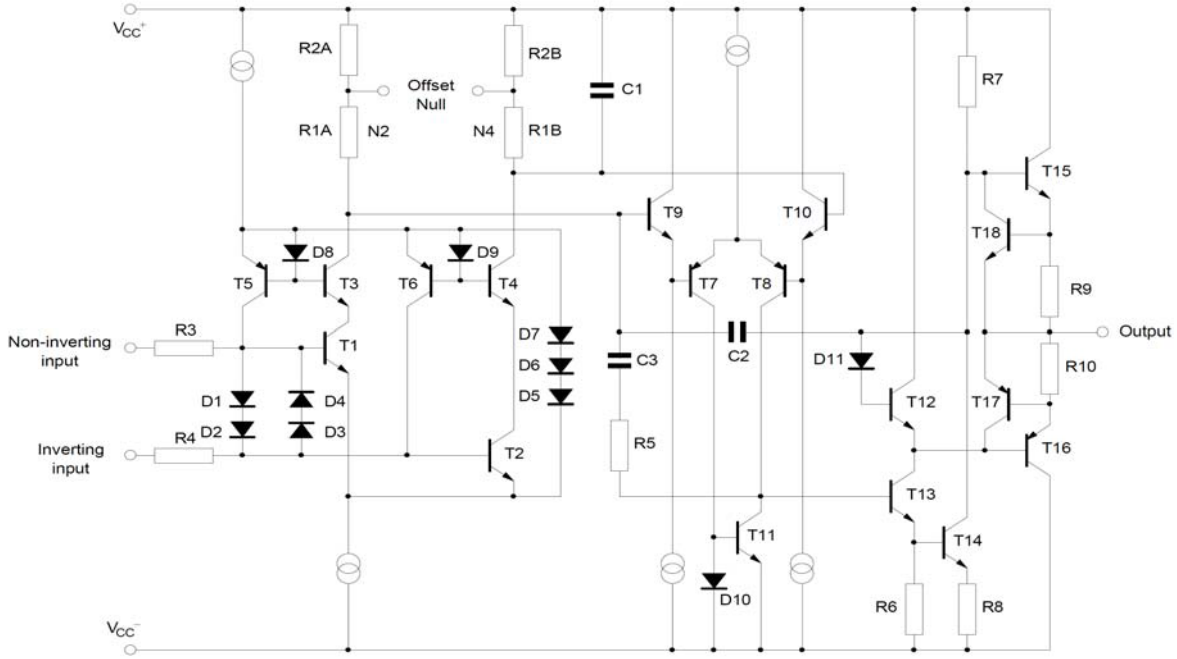

6.Limit parameter

Parameter Name	Symbol	Numerical Value	Unit
Power supply voltage	V_{CC}	±20	V
input voltage	V_i	±18	V
Input differential voltage	V_{id}	±30	V
Working temperature	T_{OPR}	-10 to +85	°C
storage temperature	T_{STG}	-40 to +150	°C

7.Electrical characteristics

(V_{CC}=15V, Tamp=25°C shall be specified separately)

Parameter	Symbol	Conditions	Min	Typ	Max	Units
Offset Voltage	V_{OS}				150	μV
		0°C<Tamb<70°C			250	μV
Offset Temperature Drift	dV_{OS}/dT				1.8	μV/°C
Input Offset Current	I_{OS}				8	nA
Input Bias Current	I_b				28	nA
Input Common- Mode Voltage	V_{cm}	0°C<Tamb<70°C	±13	±13.5		V
Common Mode Rejection Ratio	CMRR		100			dB
Power Supply Rejection Ratio	SVR		90			dB
Large Signal Voltage Gain	Avd	V_{CC}=±15V, R_L=2kΩ, V_O=±10V	100			V/mV
Peak Output	V_{opp}	R_L=10kΩ	±12			V
		R_L=2kΩ	±11.5			V
Gain Band Width	GBP	R_L=2kΩ, C_L=100pF, f=100KHz		0.5		MHz
Power Supply Current (Noload)	I_{CC}	I_{OUT}=0A		3.8	6	mA
		0°C<Tamb<70°C			7	mA
		V_{CC}=±3V		1	3	mA

8.Typical application diagram

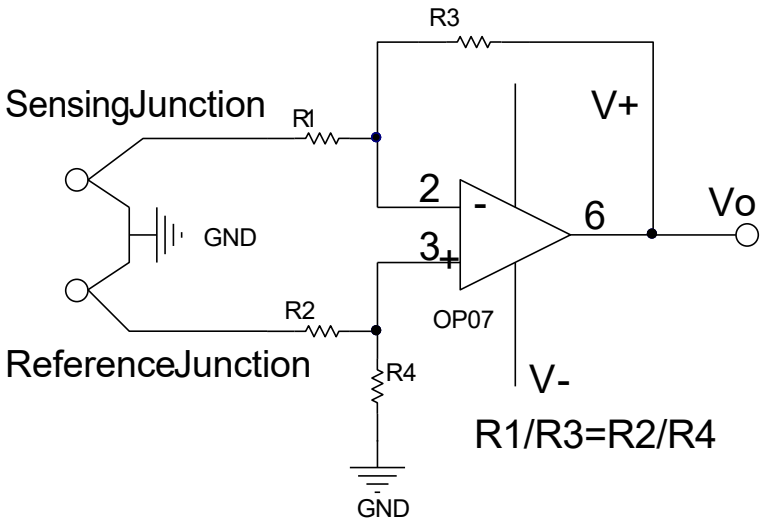

High stability thermocouple amplification

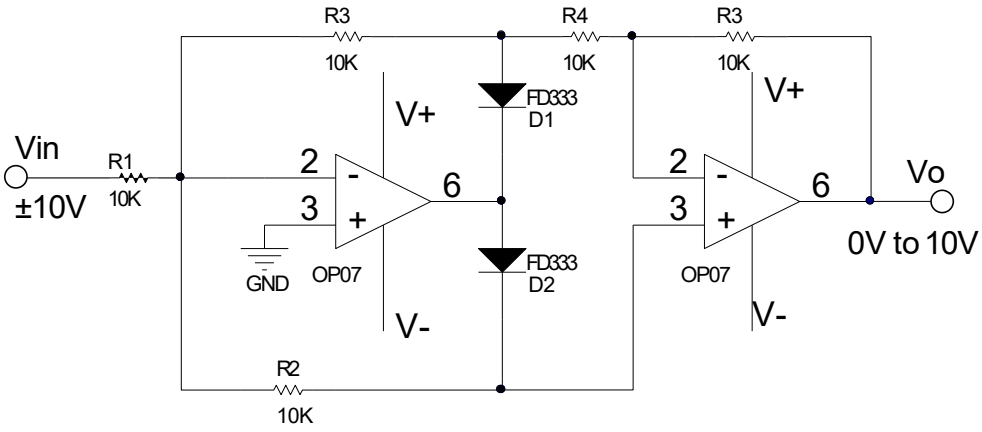

Precision absolute value circuit

9.SOP-8 Package Outline Dimensions

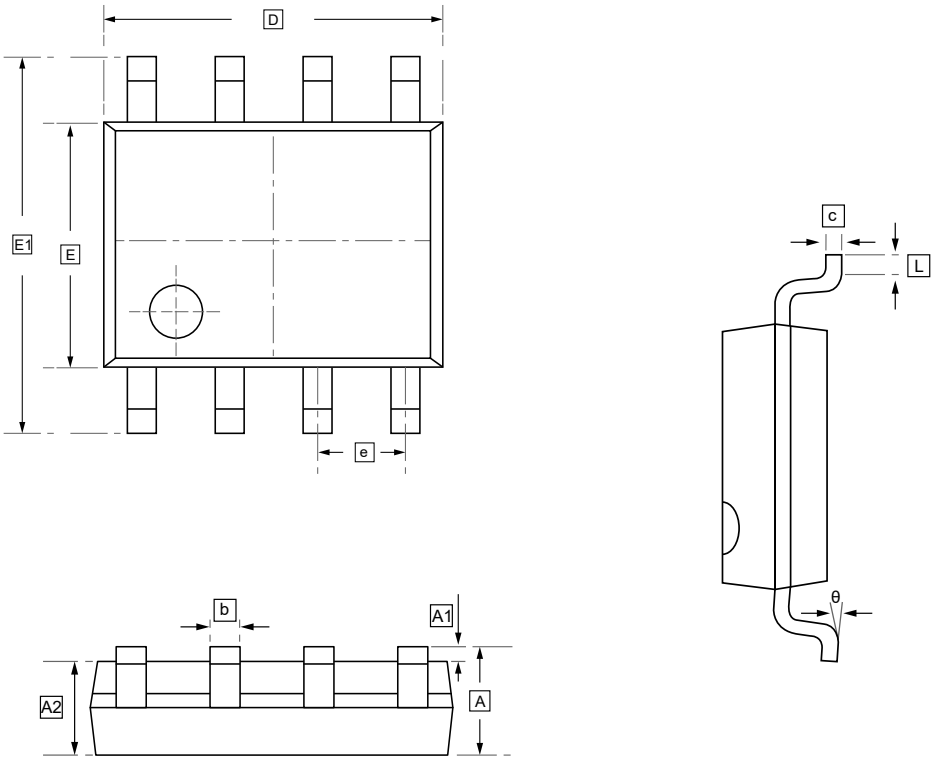

DIMENSIONS (mm are the original dimensions)

Symbol	A	A1	A2	b	c	D	E	E1	e	L	θ
Min	1.350	0.000	1.350	0.330	0.170	4.700	3.800	5.800	1.270	0.400	0°
Max	1.750	0.100	1.550	0.510	0.250	5.100	4.000	6.200	BSC	1.270	8°

10.Ordering information

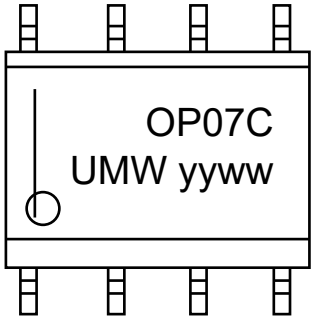

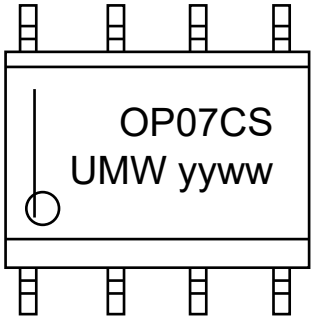

yy: Year Code
ww: Week Code

Order Code	Package	Base QTY	Delivery Mode
UMW OP07CDR	SOP-8	2500	Tape and reel
UMW OP07CSZ	SOP-8	2500	Tape and reel

11.Disclaimer

UMW reserves the right to make changes to all products, specifications. Customers should obtain the latest version of product documentation and verify the completeness and currency of the information before placing an order.

When applying our products, please do not exceed the maximum rated values, as this may affect the reliability of the entire system. Under certain conditions, any semiconductor product may experience faults or failures. Buyers are responsible for adhering to safety standards and implementing safety measures during system design, prototyping, and manufacturing when using our products to prevent potential failure risks that could lead to personal injury or property damage.

Unless explicitly stated in writing, UMW products are not intended for use in medical, life-saving, or life-sustaining applications, nor for any other applications where product failure could result in personal injury or death. If customers use or sell the product for such applications without explicit authorization, they assume all associated risks.

When reselling, applying, or exporting, please comply with export control laws and regulations of China, the United States, the United Kingdom, the European Union, and other relevant countries, regions, and international organizations.

This document and any actions by UMW do not grant any intellectual property rights, whether express or implied, by estoppel or otherwise. The product names and marks mentioned herein may be trademarks of their respective owners.