UMW PESD5V0V1Bx

1.Features

- Bidirectional ESD protection of oneline
- Very low diode capacitance: C_d=11pF
- Max. peak pulse power: P_{PP}=45W
- Low clamping voltage: V_{CL}=12.5V
- Ultra low leakage current: I_{RM}<1nA
- ESD protection up to30kV
- IEC61000-4-2; level4 (ESD)
- IEC61000-4-5 (surge); I_{PP}=4.8A
- AEC-Q101 qualified

2.Applications

- Computers and peripherals
- Audio and video equipment
- Cellular handsets and accessories
- Subscriber Identity Module(SIM) card protection
- Communication systems
- Portable electronics
- 10/100Mbit/sEthernet
- FireWire

3.Mechanical Data

- SOD-882 package
- Molding compound flammability rating: UL 94V-0
- Packaging: Tape and Reel
- RoHS/WEEE Compliant

4.Pinning information

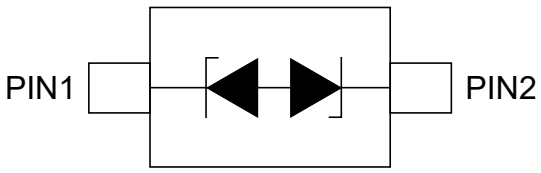

SOD-323/523

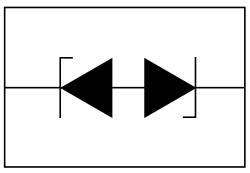

SOD-882

5. Quick reference data

T_{amb}=25°C unless otherwise specified.

Parameter	Symbol	Conditions	Min	Typ	Max	Units
reverse standoff voltage	V_{RWM}				5	V
diode capacitance	C_d	V_R=0V, f=1MHz		11	13	pF

6. Ordering information

Type number	Name	Description	Version
PESD5V0V1BA	SC-76	plastic surface-mounted package; 2 leads	SOD323
PESD5V0V1BB	SC-79	plastic surface-mounted package; 2 leads	SOD523
PESD5V0V1BL		leadless ultra small plastic package; 2 terminals; body 1.0 ? 0.6 ? 0.5 mm	SOD882

7.Limiting values

In accordance with the Absolute Maximum Rating System (IEC 60134).

Parameter	Symbol	Conditions	Min	Typ	Max	Units
Per diode						
peak pulse power	P_{PP}	t_p=8/20μs ①			45	W
peak pulse current	I_{PP}	t_p=8/20μs ①			4.8	A
Per device						
junction temperature	T_J				150	°C
ambient temperature	T_{amb}		-55		150	°C
storage temperature	T_{STG}		-65		150	°C

Notes:

① Non-repetitive current pulse 8/20 μs exponential decay waveform according to IEC 61000-4-5.

8.ESD maximum ratings

T_{amb}=25 °C unless otherwise specified

Parameter	Symbol	Conditions	Min	Typ	Max	Units
electrostatic discharge voltage	V_{ESD}	IEC 61000-4-2 (contact discharge) ①			30	kV
		machine model			2	kV
		MIL-STD-883 (human body model)			16	kV

Notes:

① Device stressed with ten non-repetitive ESD pulses.

9.ESD standards compliance

Parameter	Conditions
IEC 61000-4-2; level 4 (ESD)	> 15 kV (air); > 8 kV (contact)
MIL-STD-883; class 3B (human body model)	> 8 kV

10.Electrical Characteristic (T_A=25°C unless otherwise noted)

Parameter	Symbol	Conditions	Min	Typ	Max	Units
reverse stand off voltage	V_{RWM}				5	V
reverse leakage current	I_{RM}	V_{RWM}=5V		<1	10	nA
breakdown voltage	V_{BR}	I_R=5mA	5.8	6.8	7.8	V
diode capacitance	C_d	f=1MHz, V_R=0V		11	13	pF
clamping voltage	V_{CL}	I_{PP}=4.8A ①			12.5	V
dynamic resistance	r_{dyn}	I_R=10A ②		0.2		Ω
differential resistance	r_{dif}	I_R=5mA			35	Ω

Notes:

① Non-repetitive current pulse 8/20 μs exponential decay waveform according to IEC 61000-4-5.

② Non-repetitive current pulse, Transmission Line Pulse (TLP) t_p=100 ns; square pulse; ANS/IESD STM5.1-2008.

11.1Typical characteristic

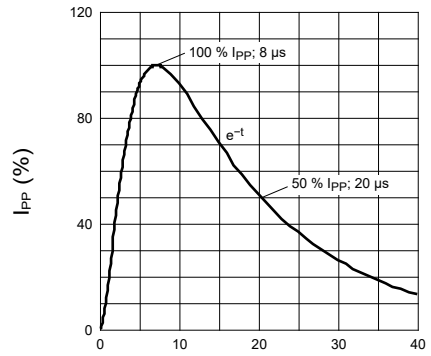

Figure 1: 8/20µs pulse waveform according to IEC 61000-4-5

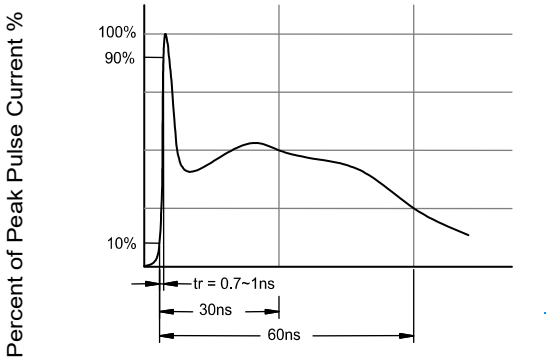

Figure 2: ESD pulse waveform according to IEC 61000-4-2

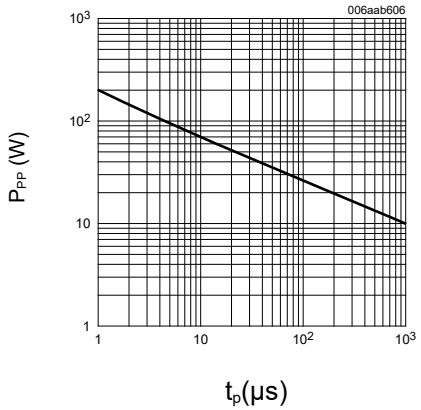

Figure 3: Peak pulse power as a function of exponential pulse duration; typical values

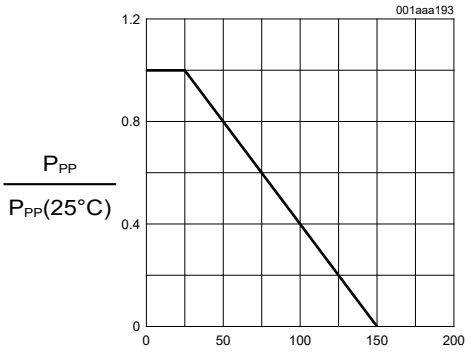

Figure 4: Relative variation of peak pulse power as a function of junction temperature; typical values

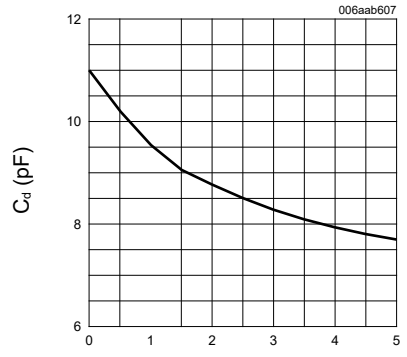

Figure 5: Diode capacitance as a function of reverse voltage; typical values

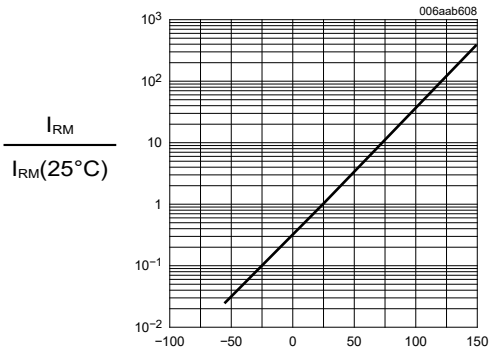

Figure 6: Relative variation of reverse leakage current as a function of junction temperature; typical values

11.2Typical characteristic

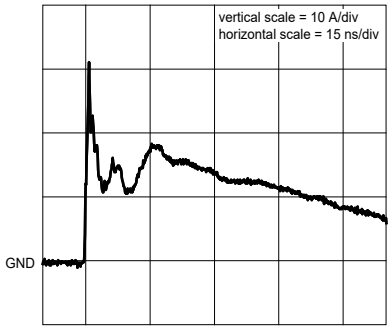

Figure 7: unclamped +8 kV ESD pulse waveform (IEC 61000-4-2 network)

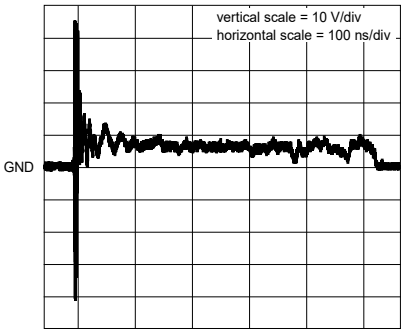

Figure 8: clamped +8 kV ESD pulse waveform (IEC 61000-4-2 network)

12.1SOD-323 Package Outline Dimensions

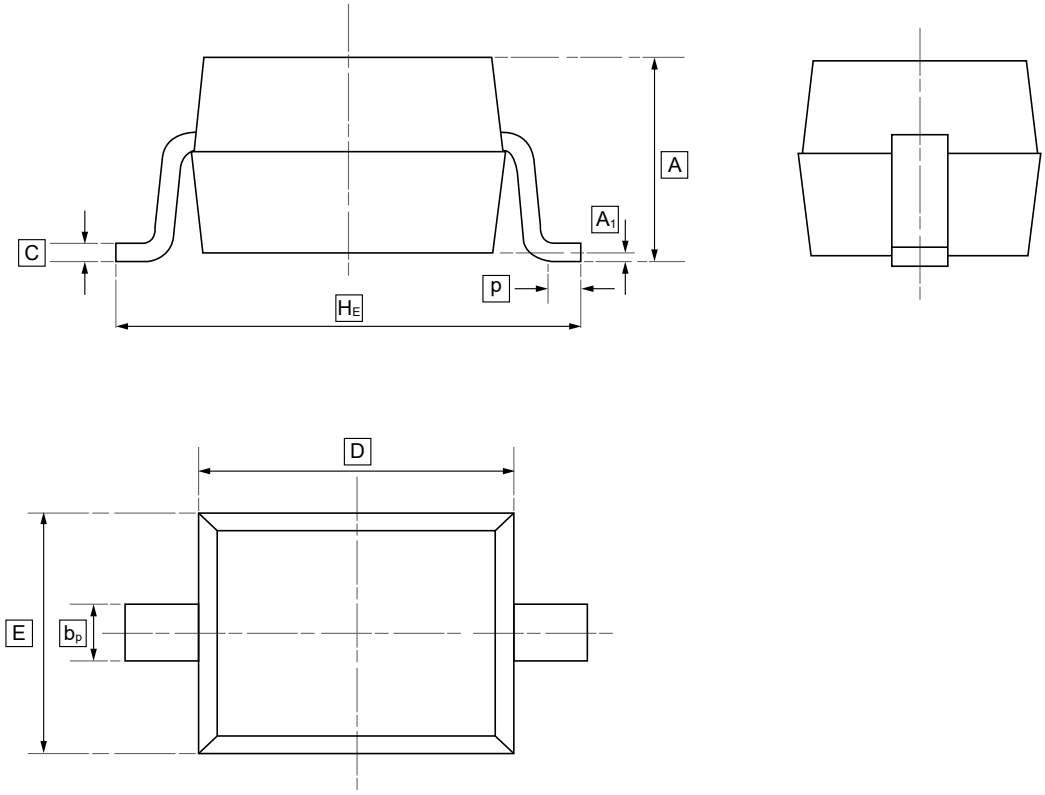

DIMENSIONS (mm are the original dimensions)

Symbol	A	b_p	C	D	E	H_E	A_1	L_p
Min	0.90	0.25	0.10	1.60	1.15	2.30	0.01	0.20
Max	1.20	0.40	0.15	1.80	1.35	2.80	0.10	0.50

12.2.SOD-523 Package Outline Dimensions

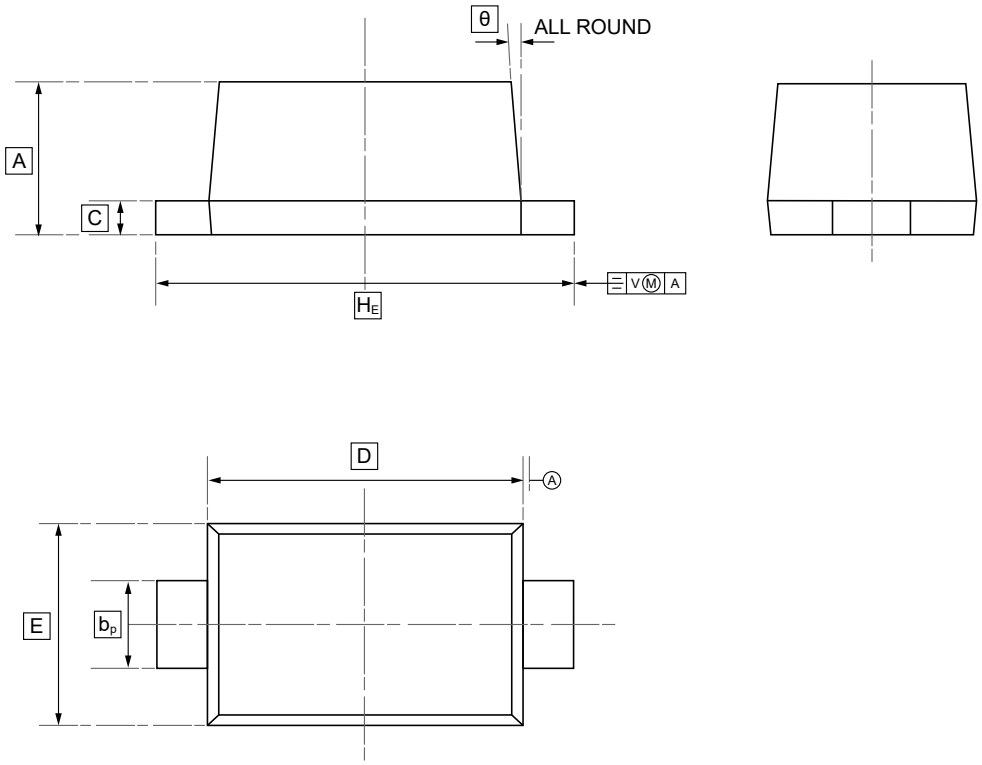

DIMENSIONS (mm are the original dimensions)

Symbol	A	b_p	C	D	E	H_E	θ
Min	0.58	0.3	0.100	1.15	0.75	1.5	5°
Max	0.68	0.4	0.135	1.25	0.85	1.7	

12.3.SOD-882 Package Outline Dimensions

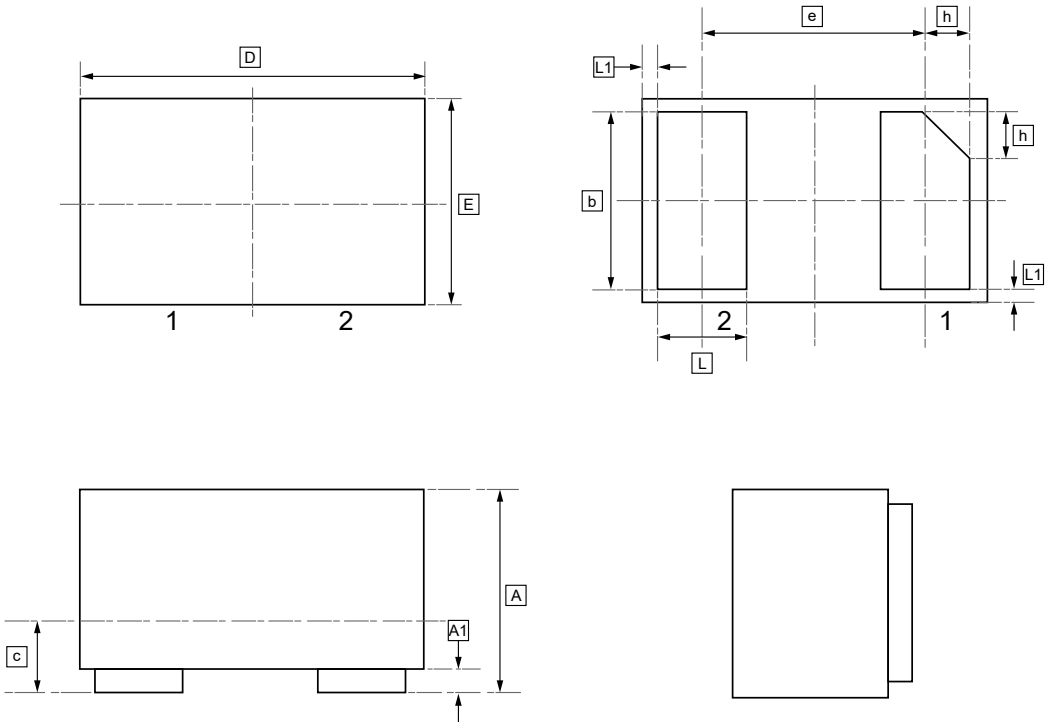

DIMENSIONS (mm are the original dimensions)

Symbol	A	A1	b	c	D	e	E	L	L1	h
Min	0.45	0.00	0.45	0.12	0.95	0.65	0.55	0.20	0.05	0.07
Max	0.55	0.05	0.55	0.18	1.05	BSC	0.65	0.30	REF	0.17

13.Ordering information

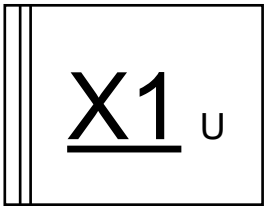

Order Code	Marking	Package	Base QTY	Delivery Mode
UMW PESD5V0V1BA	1K	SOD-323	10000	Tape and reel
UMW PESD5V0V1BB	Z9	SOD-523	10000	Tape and reel
UMW PESD5V0V1BL	X1	SOD-882	10000	Tape and reel

14.Disclaimer

UMW reserves the right to make changes to all products, specifications. Customers should obtain the latest version of product documentation and verify the completeness and currency of the information before placing an order.

When applying our products, please do not exceed the maximum rated values, as this may affect the reliability of the entire system. Under certain conditions, any semiconductor product may experience faults or failures. Buyers are responsible for adhering to safety standards and implementing safety measures during system design, prototyping, and manufacturing when using our products to prevent potential failure risks that could lead to personal injury or property damage.

Unless explicitly stated in writing, UMW products are not intended for use in medical, life-saving, or life-sustaining applications, nor for any other applications where product failure could result in personal injury or death. If customers use or sell the product for such applications without explicit authorization, they assume all associated risks.

When reselling, applying, or exporting, please comply with export control laws and regulations of China, the United States, the United Kingdom, the European Union, and other relevant countries, regions, and international organizations.

This document and any actions by UMW do not grant any intellectual property rights, whether express or implied, by estoppel or otherwise. The product names and marks mentioned herein may be trademarks of their respective owners.