UMW RCLAMP052xP

1.Description

The ESD9N12BA is a TVS (Transient Voltage Suppressor) designed to protect sensitive electronic components which are connected to data and transmission lines from over-stress caused by ESD (Electrostatic Discharge), EFT (Electrical Fast Transients) and lightning.

2.Applications

- High Definition Multi-Media Interface (HDMI)
- Digital Visual Interface (DVI)
- DisplayPortTM Interface
- MDDI Ports
- PCI Express
- eSATA Interfaces

3.Features

- ESD protection for high-speed data lines to
  IEC 61000-4-2 (ESD) ±17kV (air), ±12kV (contact)
  IEC 61000-4-5 (Lightning) 5A (8/20μs)
  IEC 61000-4-4 (EFT) 40A (5/50ns)
- Package design optimized for high speed lines
- Flow-Through design
- Protects two or four I/O lines
- Low capacitance: 0.3pF typical (I/O to I/O)
- Low clamping voltage
- Low operating voltage: 5V
- Solid-state silicon-avalanche technology

4.Mechanical Characteristics

- SLP1610P4 6-pin package
  (1.6 x 1.0 x 0.58mm)
- Lead Pitch: 0.5mm
- Lead finish: NiPdAu
- SLP2510P8 10-pin package
  (2.5 x 1.0 x 0.58mm) Pb-Free, Halogen Free,RoHS/WEEE Compliant

5.1Pinning information

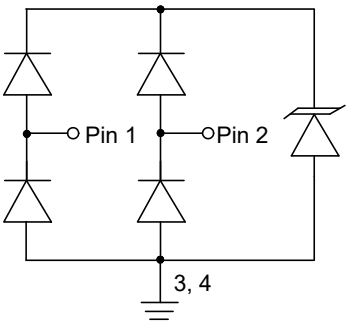

SLP1610P4

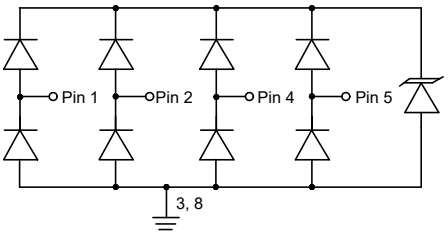

DFN2510-10

6.Absolute Maximum Ratings

Parameter	Symbol	Value	Units
Peak Pulse Power (t_p=8/20μs)	P_{PK}	150	W
Peak Pulse Current (t_p=8/20μs)	I_{PP}	5	A
ESD per IEC 61000-4-2 (Air)	V_{ESD}	±17	kV
ESD per IEC 61000-4-2 (Contact)		±12	kV
Junction temperature	T_J	-55 to 125	°C
Storage temperature	T_{STG}	-55 to 150	°C

7.Electrical Characteristics(T=25°C)

Parameter	Symbol	Conditions	Min	Typ	Max	Units
Reverse stand-off voltage	V_{RWM}	Any I/ O pin to ground			5	V
Reverse breakdown voltage	V_{BR}	I_T=1mA Any I/ Opin to ground	6			V
Reverse leakage current	I_R	V_{RWM}=5V, T=25°C Any I/ Opin to ground			1	μA
Clamping voltage	V_C	I_{PP}=1A, t_p=8/20μs Any I/ Opin to ground			15	V
Junction capacitance	C_J	V_R=0V, f=1MHz Between I/ Opins		0.3	0.4	pF
		V_R=0V, f=1MHz Any I/ Opin to ground			0.8	pF

8.1Typical characteristic

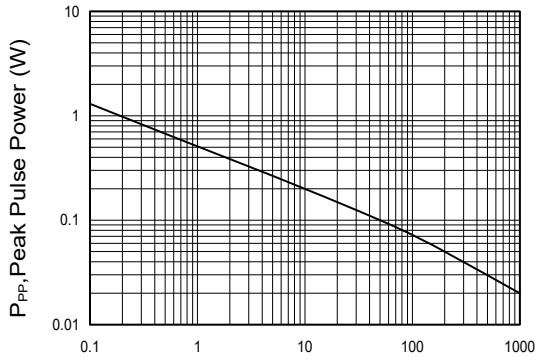

Figure 1: Non-Repetitive Peak Pulse Power vs. Pulse Time

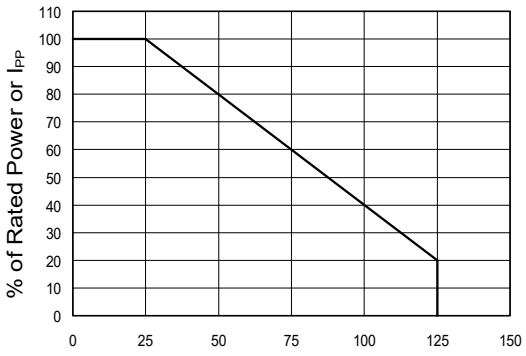

Figure 2: Power Derating Curve

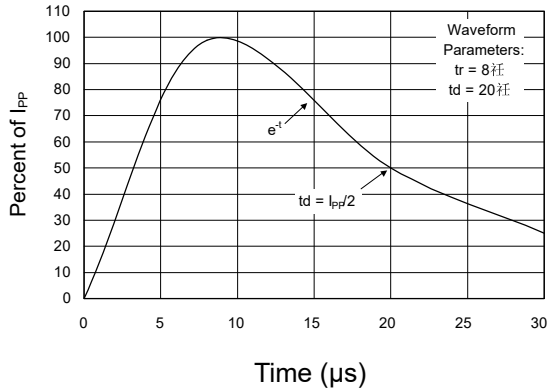

Figure 3: Pulse Waveform

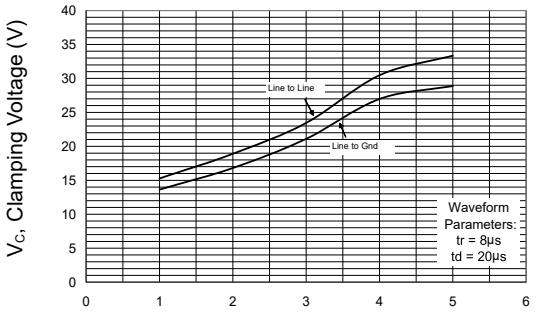

Figure 4: Clamping Voltage vs. Peak Pulse Current (Between any I/O and Ground)

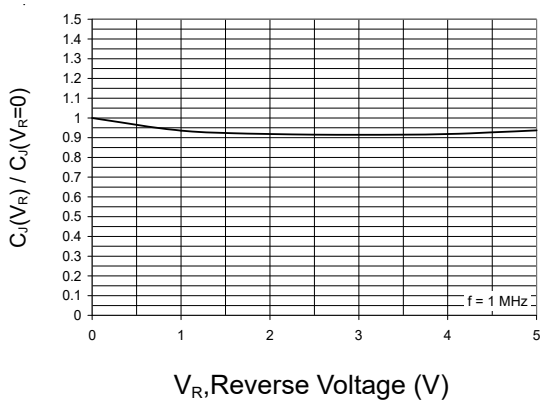

Figure 5: Normalized Capacitance vs. Reverse Voltage

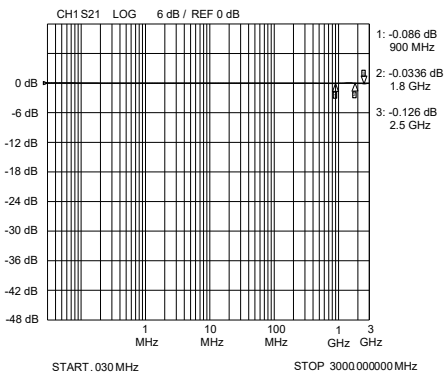

Figure 6: Insertion Loss S21 - I/O to GND

8.2Typical characteristic

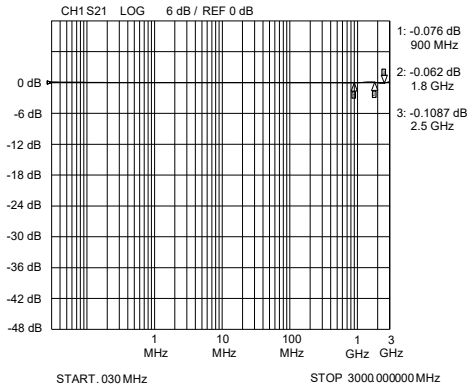

Figure 7: Insertion Loss S21 - I/O to I/O

9.1 SLP1610P4 Package Outline Dimensions

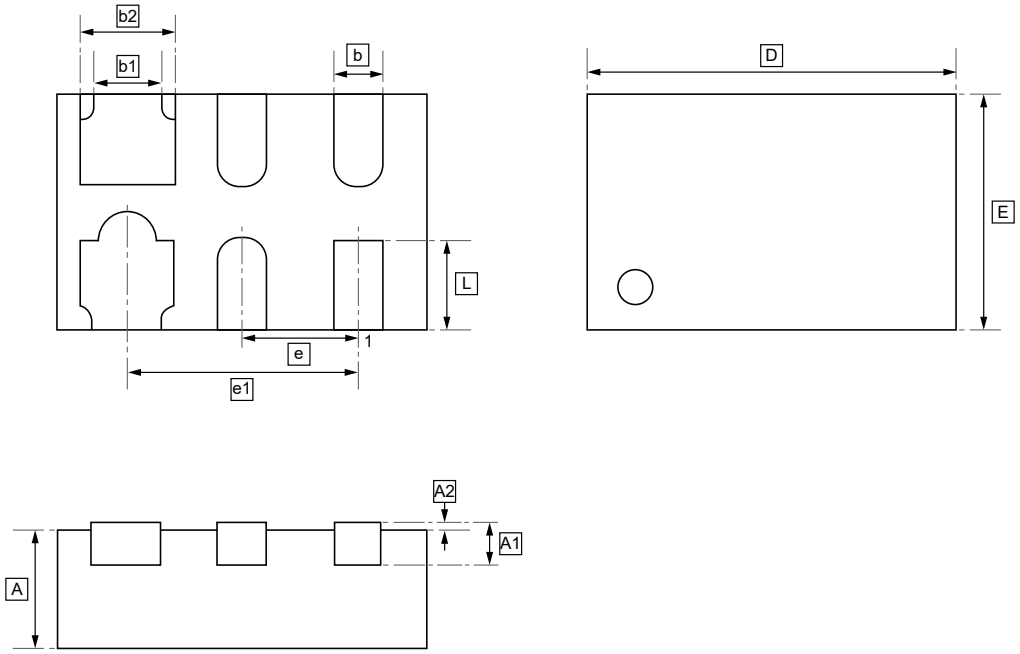

DIMENSIONS (mm are the original dimensions)

Symbol	D	E	L	b	b1	b2	e	e1	A	A1	A2
Min	1.55	0.95	0.33	0.15	0.35	0.25	0.50	1.00	0.45	0.15	0.00
Max	1.65	1.05	0.43	0.25	0.45	0.35	BSC	BSC	0.55	REF	0.05

9.DFN2510-10 Package Outline Dimensions

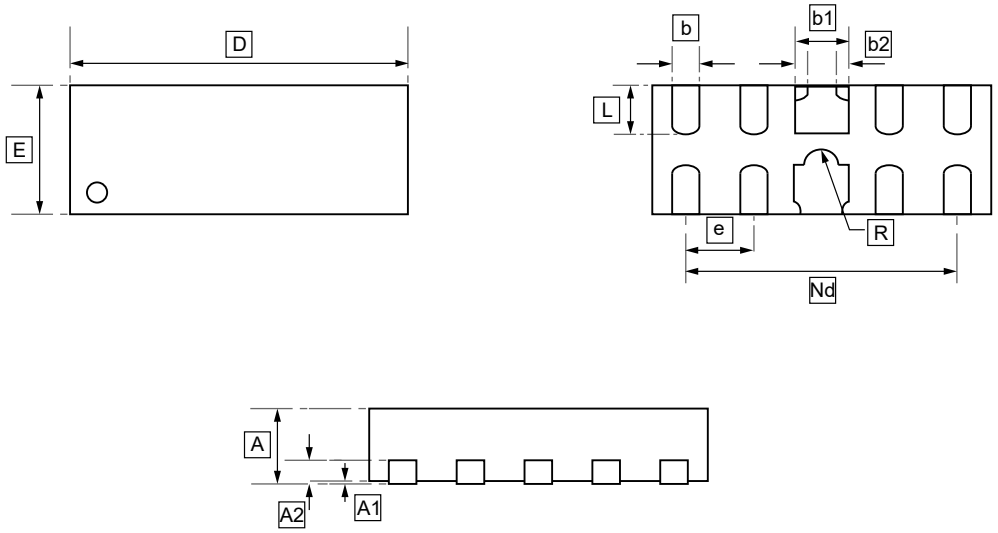

DIMENSIONS (mm are the original dimensions)

Symbol	D	E	b1	b2	b	L	Nd	e	R	A	A1	A2
Min	2.45	0.95	0.35	0.15	0.10	0.33	2.00	0.50	0.125	0.45	0.152	-
Max	2.55	1.05	0.45	0.25	0.20	0.43	BSC	BSC	BSC	0.55	REF	0.05

10.Ordering information

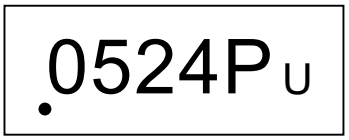

Order Code	Marking	Package	Base QTY	Delivery Mode
UMW RCLAMP0522P.TCT	0522P	SLP1610P4	3000	Tape and reel
UMW RCLAMP0524P	0524P	DFN2510-10	3000	Tape and reel

11.Disclaimer

UMW reserves the right to make changes to all products, specifications. Customers should obtain the latest version of product documentation and verify the completeness and currency of the information before placing an order.

When applying our products, please do not exceed the maximum rated values, as this may affect the reliability of the entire system. Under certain conditions, any semiconductor product may experience faults or failures. Buyers are responsible for adhering to safety standards and implementing safety measures during system design, prototyping, and manufacturing when using our products to prevent potential failure risks that could lead to personal injury or property damage.

Unless explicitly stated in writing, UMW products are not intended for use in medical, life-saving, or life-sustaining applications, nor for any other applications where product failure could result in personal injury or death. If customers use or sell the product for such applications without explicit authorization, they assume all associated risks.

When reselling, applying, or exporting, please comply with export control laws and regulations of China, the United States, the United Kingdom, the European Union, and other relevant countries, regions, and international organizations.

This document and any actions by UMW do not grant any intellectual property rights, whether express or implied, by estoppel or otherwise. The product names and marks mentioned herein may be trademarks of their respective owners.