UMW RFD12N06RLESM9A

60V N-Channel MOSFET

1.Features

- $V_{DS\ (V)}$=60V
- $R_{DS(ON)}$<63mΩ(V_{GS}=10V)
- $R_{DS(ON)}$<71mΩ(V_{GS}=5V)
- Ultra Low On-Resistance
- Peak Current vs Pulse Width Curve
- UIS Rating Curve
- Switching Time vs R_{GS} Curves

2.Pinning information

Pin	Symbol	Description
1	G	GATE
2	D	SOURCE
3	S	DRAIN

TO-252(DPAK)
top view

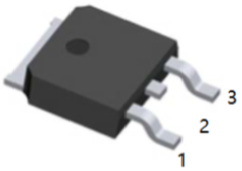

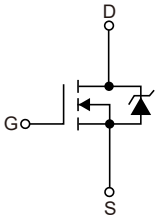

3.Absolute Maximum Ratings T_C= 25°C

Parameter	Symbol	Value	Units
Drain to Source Voltage (Note 1)	V_{DS}	60	V
Drain to Gate Voltage (R_{GS}= 20kΩ)(Note 1)	V_{DGR}	60	V
Gate to Source Voltage	V_{GS}	±16	V
Drain Current - Continuous (T_C=25°C, V_{GS}=5V)	I_D	17	A
- Continuous (T_C=25°C, V_{GS}=10V) (Figure 2)		18	A
- Continuous (T_C=135°C, V_{GS}=5V)		8	A
- Continuous (T_C=135°C, V_{GS}=4.5V) (Figure 2)		8	A
Pulsed Drain Current	I_{DM}	Figure 4	
Pulsed Avalanche Rating	UIS	Figures 6, 17, 18	
Power Dissipation	P_D	49	W
Derate Above 25°C		0.327	W/°C

Storage Temperature	T_J, T_{STG}	-55 to 175	°C
Maximum Temperature for Soldering			
Leads at 0.063in (1.6mm) from Case for 10s	T_L	300	°C
Package Body for 10s, See Techbrief TB334	T_{pkg}	260	°C

Notes:

1. T_J=25°C to 150°C.

CAUTION: Stresses above those listed in “Absolute Maximum Ratings” may cause permanent damage to the device. This is a stress only rating and operation of the device at these or any other conditions above those indicated in the operational sections of this specification is not implied.

6.Electrical Characteristic (T_C=25°C unless otherwise noted)

Parameter	Symbol	Conditions	Min	Typ	Max	Units
Drain to Source Breakdown Voltage	BV_{DSS}	I_D=250μA, V_{GS}=0V, Figure 12	60			V
		I_D=250μA, V_{GS}=0V, T_C=-40°C	60			V
Zero Gate Voltage Drain Current	I_{DSS}	V_{DS}=55V, V_{GS}=0V			1	μA
		V_{DS}=50V, V_{GS}=0V, T_C=150°C			250	μA
Gate to Source Leakage Current	I_{GSS}	V_{GS}=±16V			±100	nA
Gate to Source Threshold Voltage	$V_{GS(th)}$	V_{DS}=V_{GS}, I_D=250μA,Figure 11	1		2.1	V
Drain to Source On Resistance	$R_{DS(ON)}$	I_D=18A, V_{GS}=10V, Figure 9,10		52	63	mΩ
		I_D=8A, V_{GS}=5V, Figure 9		60	71	mΩ
		I_D=8A, V_{GS}=4.5V, Figure 9		64	75	mΩ
Thermal Resistance Junction to Case	$R_{θJC}$	TO-252AA			3.06	°C/W
Thermal Resistance Junction to Ambient	$R_{θJA}$				100	°C/W
Turn-On Time	$t_{(on)}$	V_{DD}=30V, I_D=8A V_{GS}=4.5V, R_{GS}=22Ω Figures 15, 21,22			153	ns
Turn-On Delay Time	$t_{D(on)}$			13		ns
Rise Time	t_r			89		ns
Turn-Off Delay Time	$t_{D(off)}$			22		ns
Fall Time	t_f			37		ns
Turn-Off Time	$t_{(off)}$				89	ns
Turn-On Time	$t_{(on)}$	V_{DD}=30V, I_D=18A V_{GS}=10V, R_{GS}=24Ω Figures 16, 21,22			59	ns
Turn-On Delay Time	$t_{D(on)}$			5.3		ns
Rise Time	t_r			34		ns
Turn-Off Delay Time	$t_{D(off)}$			41		ns
Fall Time	t_f			50		ns
Turn-Off Time	$t_{(off)}$				136	ns

Total Gate Charge	$Q_{g(tot)}$	V_{GS}=0 to 10V	V_{DD}=30V		12	15	nC
Gate Charge at 5V	$Q_{g(5)}$	V_{GS}=0 to 5V	I_D=8A		6.8	8.2	nC
Threshold Gate Charge	$Q_{g(th)}$	V_{GS}=0 to 1V	$I_{g(REF)}$=1mA		0.54	0.65	nC
Gate to Source Gate Charge	Q_{gs}	(Figures 14, 19, 20)			1.7		nC
Gate to Drain “Miller” Charge	Q_{gd}				3		nC
Input Capacitance	C_{iss}	V_{DS}=25V, V_{GS}=0V, f =1MHz (Figure 13)			485		pF
Output Capacitance	C_{oss}				130		pF
Reverse Transfer Capacitance	C_{rss}				28		pF
Source to Drain Diode Voltage	V_{SD}	I_{SD}=8A				1.25	V
		I_{SD}=4A				1	V
Reverse Recovery Time	t_{rr}	I_{SD}=8A, dI_{SD}/dt=100A/μs				70	ns
Reverse Recovered Charge	Q_{rr}	I_{SD}=8A, dI_{SD}/dt=100A/μs				165	nC

7.1Typical characteristic

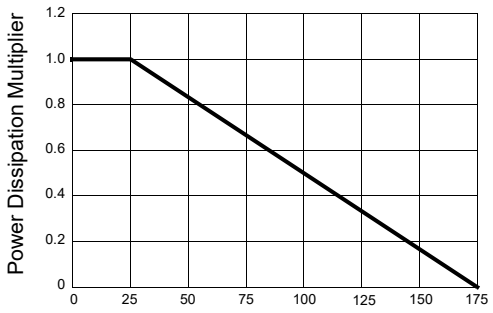

T_C, Case Temperature (°C)

Figure 1: Normalized Power Dissipation vs Case Temperature

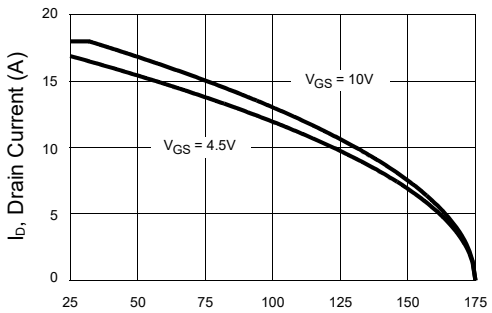

T_C, Case Temperature(°C)

Figure 2: Maximum Continuous Drain Current vs Case Temperature

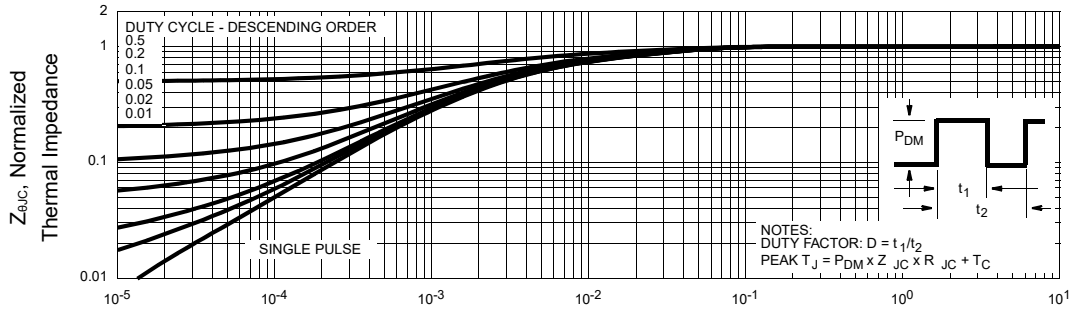

t, Rectangular Pulse Duration (s)

Figure 3: Normalized Maximum Transient Thermal Impedance

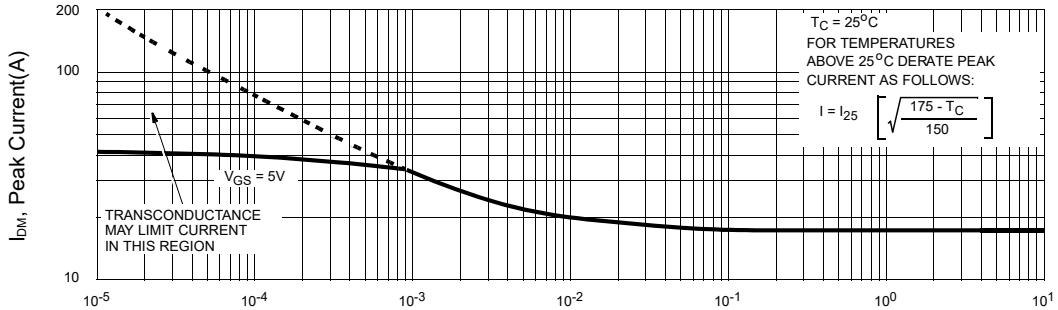

t, Pulse Width (s)

Figure 4: Peak Current Capability

7.2Typical characteristic

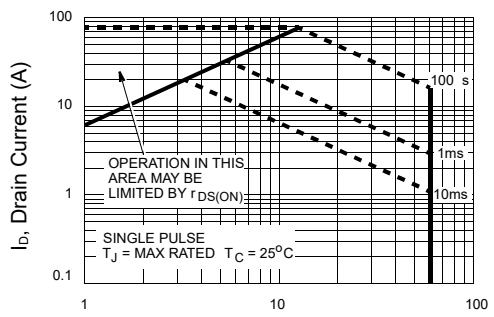

V_{DS},Drain to Source Voltage (V)

Figure 5: Forward Bias Safe Operating Area

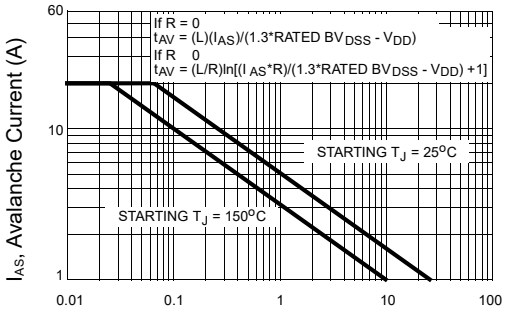

t_{AV}, Time In Avalanche(ms)

Figure 6: Unclamped Inductive Switching Capability

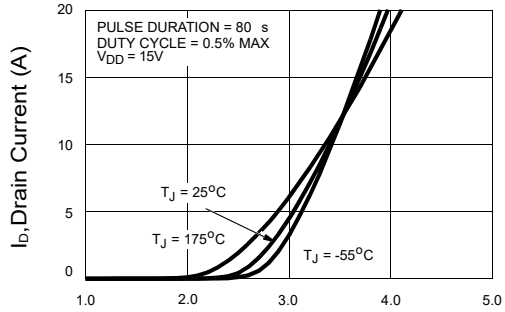

V_{GS}, Gate To Source Voltage (V)

Figure 7: Transfer Characteristics

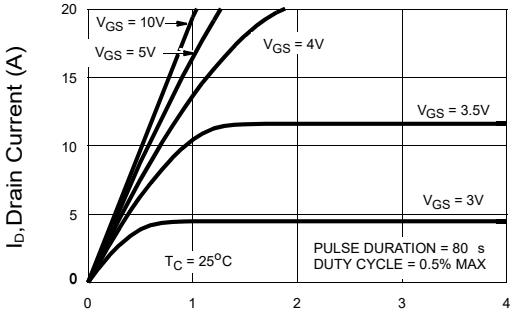

V_{DS},Drain to Source Voltage (V)

Figure 8: Saturation Characteristics

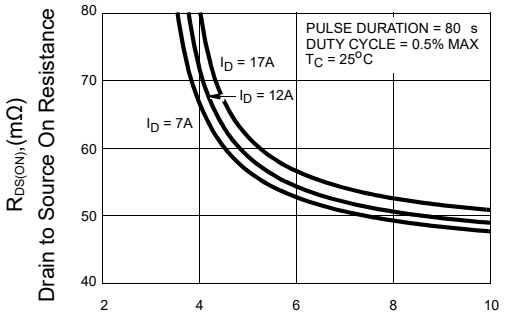

V_{GS}, Gate To Source Voltage (V)

Figure 9: Drain To Source On Resistance Vs Gate Voltage And Drain Current

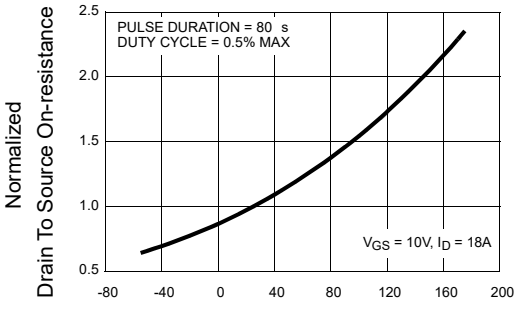

T_J, Junction Temperature(°C)

Figure 10: Normalized Drain to Source On Resistance vs Junction Temperature

7.3Typical characteristic

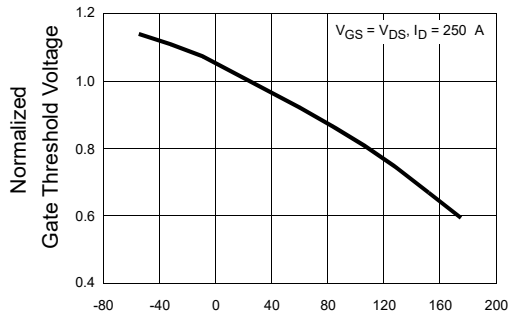

T_J,Junction Temperature (°C)

Figure 11: Normalized Gate Threshold Voltage Vs Junction Temperature

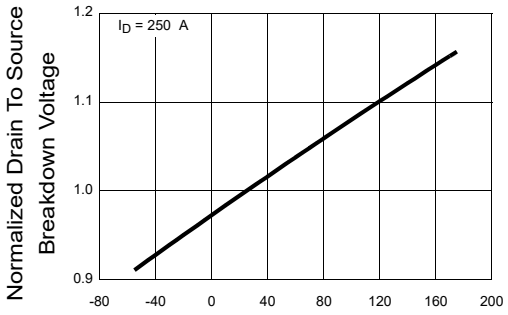

T_J,Junction Temperature (°C)

Figure 12: Normalized Drain To Source Breakdown Voltage Vs Junction Temperature

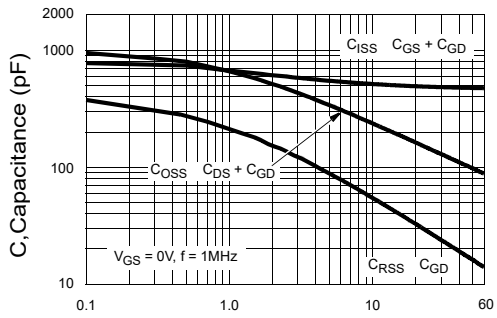

V_{DS},Drain to Source Voltage (V)

Figure 13: Capacitance vs Drain To Source Voltage

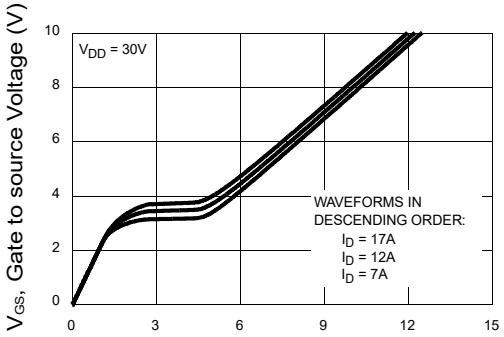

R_{GS}, Gate To Source Resistance (Ω)

Figure 14: Gate Charge Waveforms For Constant Gate Current

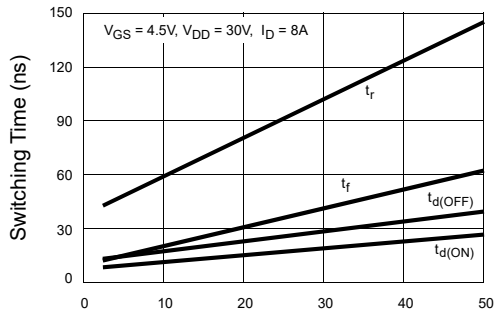

R_{GS}, Gate To Source Resistance (Ω)

Figure 15: Switching Time vs Gate Resistance

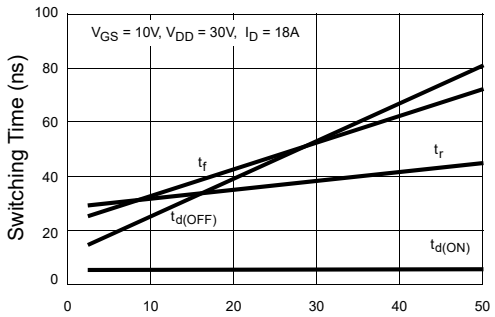

R_{GS}, Gate To Source Resistance (Ω)

Figure 16: Switching Time vs Gate Resistance

7.4Typical characteristic

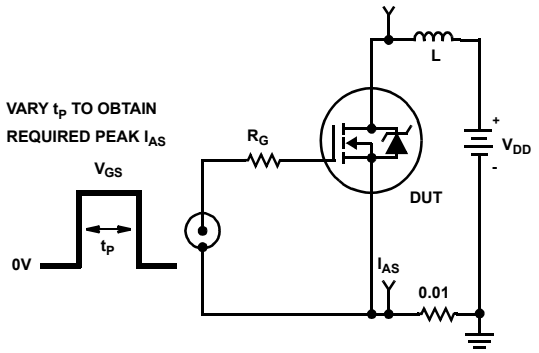

Figure 15. Unclamped Energy Test Circuit

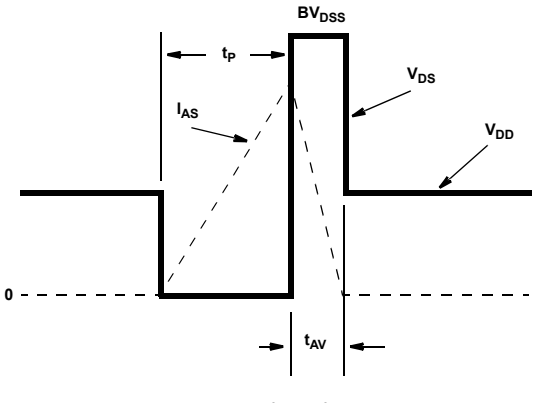

Figure 16. Unclamped Energy Waveforms

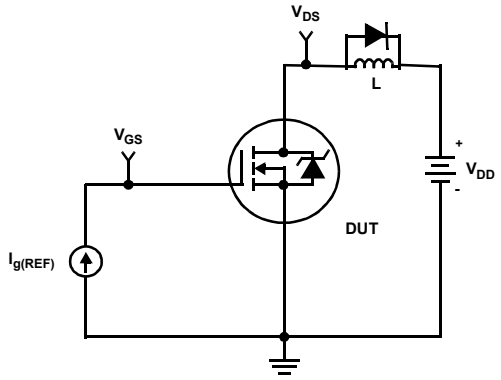

Figure 17. Gate Charge Test Circuit

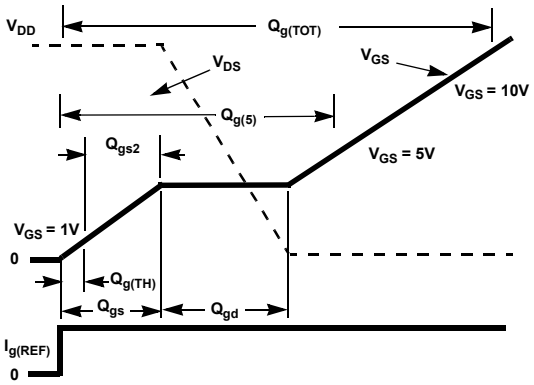

Figure 18. Gate Charge Waveforms

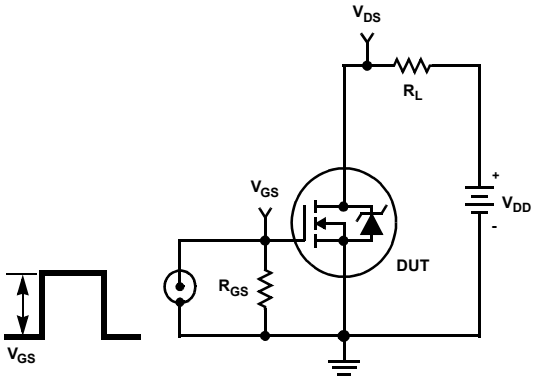

Figure 19. Switching Time Test Circuit

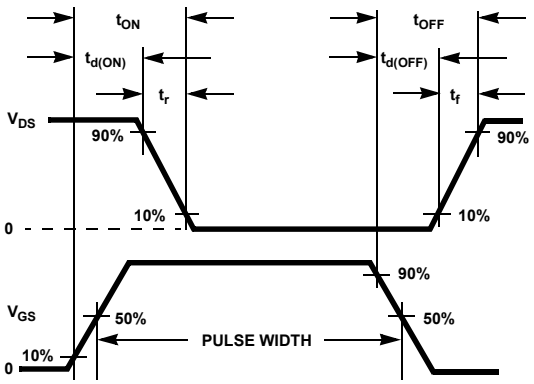

Figure 20. Switching Time Waveforms

8.TO-252 Package Outline Dimensions

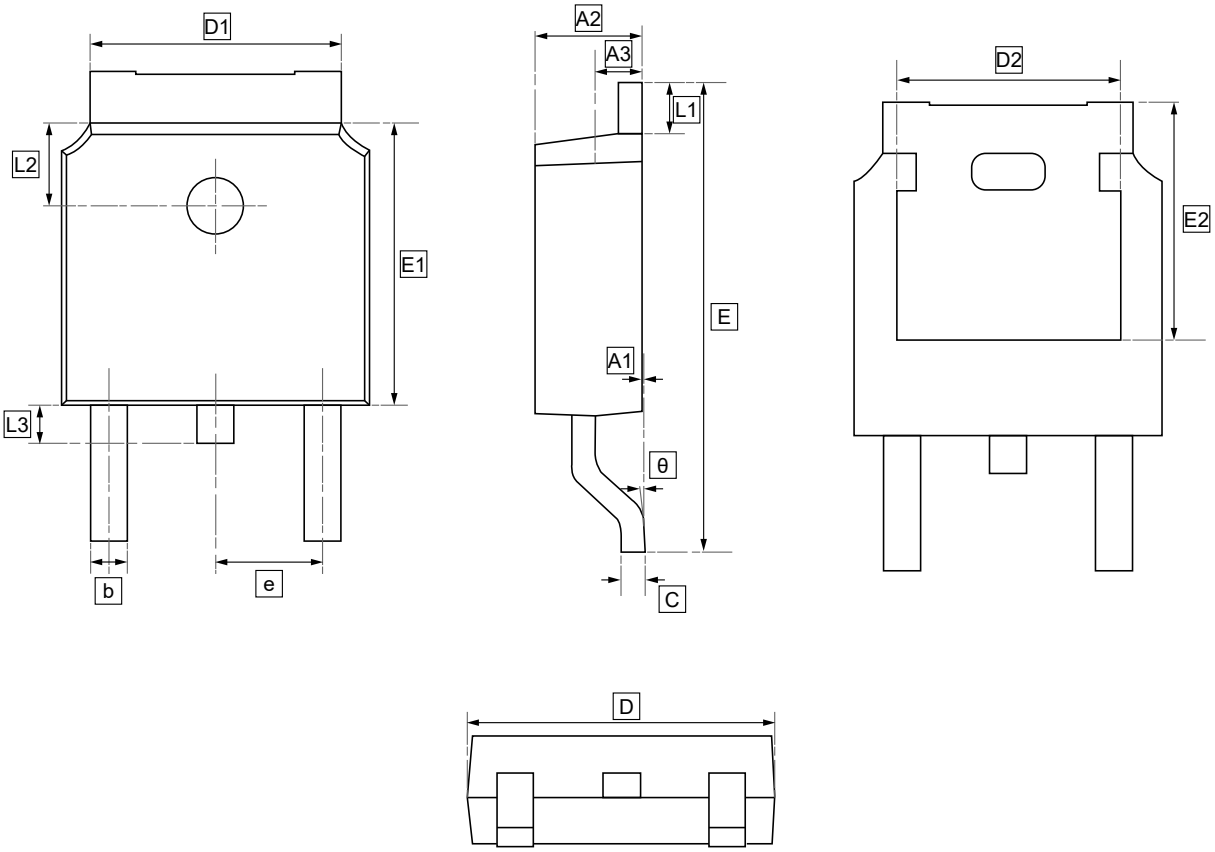

DIMENSIONS (mm are the original dimensions)

Symbol	A1	A2	A3	b	c	D	D1	D2	E	E1	E2	e	L1	L2	L3	θ
Min	0.00	2.18	0.90	0.65	0.46	6.35	4.95	4.32	9.40	5.97	5.21	2.286	0.89	1.70	0.60	0.00
Max	0.13	2.39	1.10	0.85	0.61	6.73	5.46	4.90	10.41	6.22	5.38	BSC	1.27	1.90	1.00	8.00

9.Ordering information

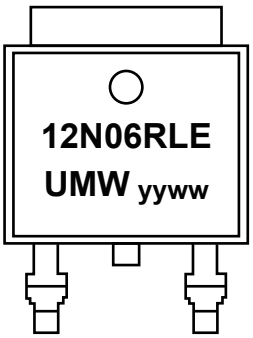

yy: Year Code
ww: Week Code

Order Code	Package	Base QTY	Delivery Mode
UMW RFD12N06RLESM9A	TO-252	2500	Tape and reel

10.Disclaimer

UMW reserves the right to make changes to all products, specifications. Customers should obtain the latest version of product documentation and verify the completeness and currency of the information before placing an order.

When applying our products, please do not exceed the maximum rated values, as this may affect the reliability of the entire system. Under certain conditions, any semiconductor product may experience faults or failures. Buyers are responsible for adhering to safety standards and implementing safety measures during system design, prototyping, and manufacturing when using our products to prevent potential failure risks that could lead to personal injury or property damage.

Unless explicitly stated in writing, UMW products are not intended for use in medical, life-saving, or life-sustaining applications, nor for any other applications where product failure could result in personal injury or death. If customers use or sell the product for such applications without explicit authorization, they assume all associated risks.

When reselling, applying, or exporting, please comply with export control laws and regulations of China, the United States, the United Kingdom, the European Union, and other relevant countries, regions, and international organizations.

This document and any actions by UMW do not grant any intellectual property rights, whether express or implied, by estoppel or otherwise. The product names and marks mentioned herein may be trademarks of their respective owners.