UMW SDD32C24L01

1.Description

The UMW SDD32C24L01 is designed to protect low voltage sensitive components from ESD and transient voltage events. Excellent clamping capability, low leakage, and fast response time, make these parts ideal for ESD protection on designs where board space is at a premium.

2.Applications

- Cellular handsets & Accessories
- Cordless phones
- Personal digital assistants (PDAs)
- Notebooks & Handhelds
- Portable instrumentation
- Digital cameras
- Peripherals
- MP3 players

3.Features

- IEC61000-4-2 ESD 15KV Air, 8KV contact compliance
- Protects one I/O line
- Peak power dissipation of 320W under 8/20μs waveform
- Working voltage: 24V
- Low leakage current
- Low clamping voltage
- Solder reflow temperature: Pure Tin-Sn 260~270°C

4.Pinning information

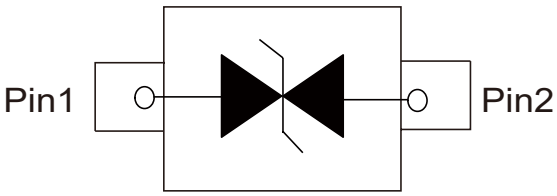

SOD-323

5.Absolute Maximum Ratings

Parameter	Symbol	Maximum	Units
Peak pulse power (tp=8/20us waveform)	P_{PP}	320	W
ESD voltage (Contact discharge)	V_{ESD}	±8	kV
ESD voltage (Air discharge)		±15	kV
Storage & Junction temperature range	$T_{STG,}$ T_J	-55 to 150	°C

6.Electrical Characteristics (T_J=25°C)

Parameter	Symbol	Conditions	Min	Typ	Max	Units
Reverse stand-off voltage	V_{RWM}				24	V
Reverse breakdown voltage	V_{BR}	I_{BR}=1mA	26.7			V
Reverse leakage current	I_R	V_R=24V			1	μA
Clamping voltage (tp=8/20μs)	V_C	I_{PP}=1A			43	V
Off state junction capacitance	C_J	0Vdc, f=1MHz		37		pF

7.Typical characteristic

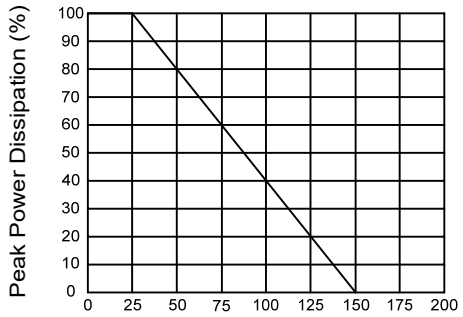

Figure 1: Power Derating Curve

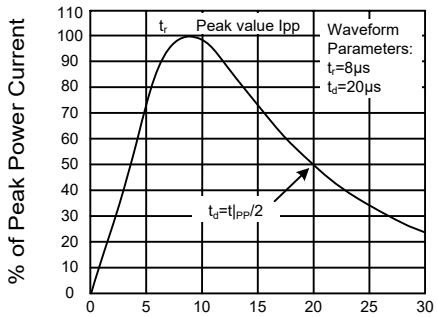

Figure 2: Pulse Waveform

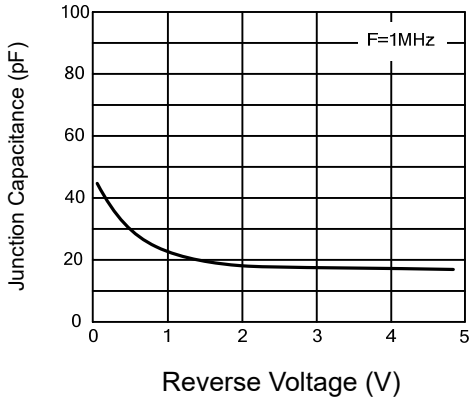

Figure 3: Capacitance vs. Reverse Voltage

8.Recommended Soldering Conditions

Profile Feature		Pb-Free Assembly
Average ramp-up rate (T_L to T_P)		3°C/second max.
Preheat	-Temperature Min ($T_{s(min)}$)	150°C
	-Temperature Max ($T_{s(max)}$)	200°C
	-Time (Min to Max) (t_s)	60-180 secs.
$T_{s(max)}$ to T_L - Ramp-up Rate		3°C/sec. Max
Time maintained above	-Temperature (T_L)	217°C
	-Time (T_L)	60-150 secs.
Peak Temperature (T_p)		260°C
Time within 5°C of actual Peak Temperature (T_p)		20-40 seconds
Ramp-down Rate		6°C/sec. Max
Time 25°C to Peak Temperature		8 min. Max

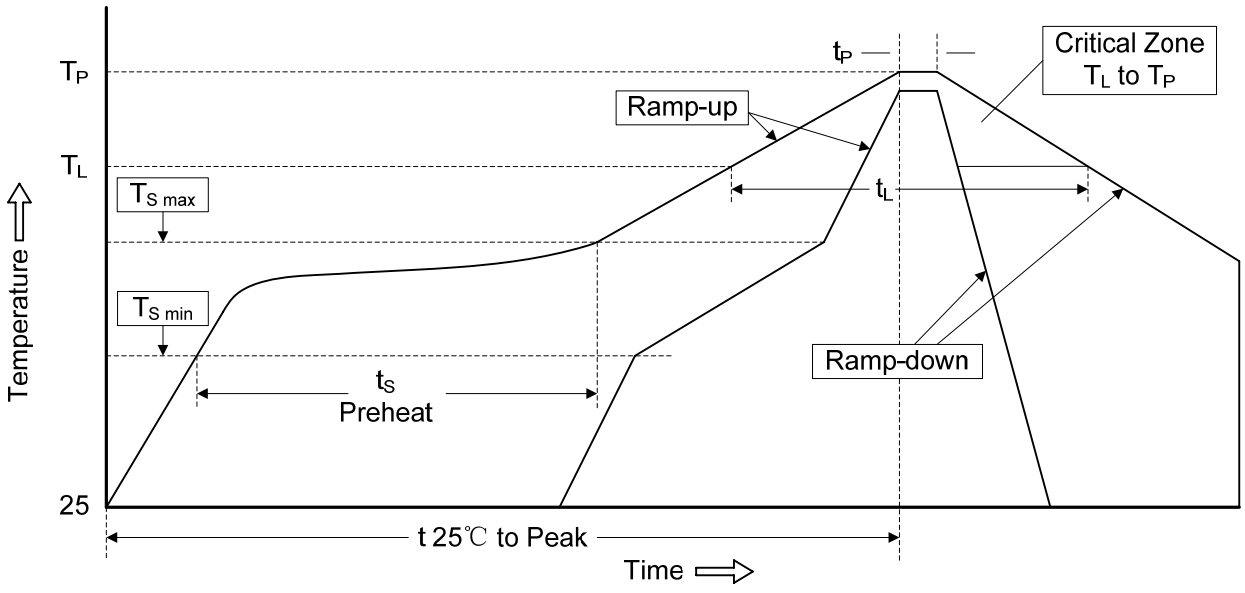

9.SOD-323 Package Outline Dimensions

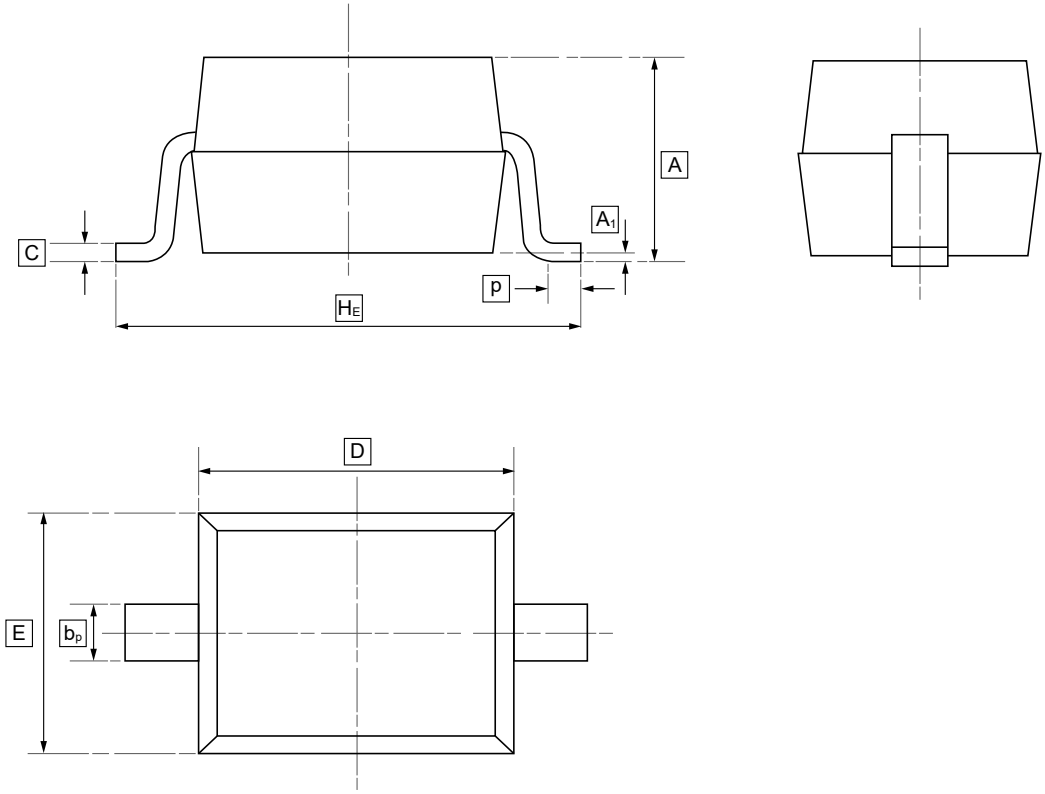

DIMENSIONS (mm are the original dimensions)

Symbol	A	b_p	C	D	E	H_E	A_1	p
Min	0.80	0.25	0.10	1.50	1.15	2.30	0.01	0.20
Max	1.20	0.40	0.15	1.80	1.35	2.80	0.10	0.50

10.Ordering information



ww: Batch Code

Order Code	Package	Base QTY	Delivery Mode
UMW SDD32C24L01	SOD-323	3000	Tape and reel

11.Disclaimer

UMW reserves the right to make changes to all products, specifications. Customers should obtain the latest version of product documentation and verify the completeness and currency of the information before placing an order.

When applying our products, please do not exceed the maximum rated values, as this may affect the reliability of the entire system. Under certain conditions, any semiconductor product may experience faults or failures. Buyers are responsible for adhering to safety standards and implementing safety measures during system design, prototyping, and manufacturing when using our products to prevent potential failure risks that could lead to personal injury or property damage.

Unless explicitly stated in writing, UMW products are not intended for use in medical, life-saving, or life-sustaining applications, nor for any other applications where product failure could result in personal injury or death. If customers use or sell the product for such applications without explicit authorization, they assume all associated risks.

When reselling, applying, or exporting, please comply with export control laws and regulations of China, the United States, the United Kingdom, the European Union, and other relevant countries, regions, and international organizations.

This document and any actions by UMW do not grant any intellectual property rights, whether express or implied, by estoppel or otherwise. The product names and marks mentioned herein may be trademarks of their respective owners.