UMW SESD3Z08C

1.Features

The SESD3Z08C is designed to protect voltage sensitive components from ESD and transient voltage events. Excellent clamping capability, low leakage, and fast response time, make these parts ideal for ESD protection on designs where board space is at a premium.

2.Applications

- Cellular phones
- Portable devices
- Digital cameras
- Power supplies

3.Features

- Small Body Outline Dimensions
- Low Body Height
- Peak Power up to 350 Watts @8x20_μs Pulse
- Low Leakage current

  Response Time is Typically < 1 ns

  ESD Rating of Class 3 (> 16 kV) per Human Body Mode
- Complies with the following standards
- IEC61000-4-2
- Level 4 15 kV (air discharge)

  8 kV(contact discharge)
- MIL STD 883E - Method 3015-7 Class 3

  25 kV HBM (Human Body Model)

4.Pinning information

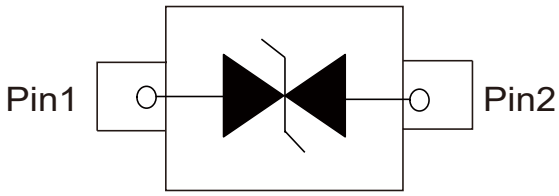

SOD-323

5.Absolute Maximum Ratings T_{amb}= 25°C

Parameter	Symbol	Maximum	Units
Peak Pulse Power (t,=8/20μs)	P_{PK}	350	W
Maximum lead temperature for soldering during 10s	T_L	260	°C
Storage Temperature Range	T_{STG}	-55 to 155	°C
Junction Temperature	T_{OP}	-40 to 125	°C
Maximum junction temperature	T_J	150	°C

6.Electrical Characteristics

Device	V_{BR}			I_T	V_{RWM}	I_R	C
	Min.	Typ.	Max.				Typ.(Note1)
	V	V	V	mA	V	μA	pF
SESD3Z08C	8.6	9.5	10.2	1	5	1	24

Notes:

1. Capacitance is measured at f=1MHz, VR=0V,T_A=25°C.

7.Electrical Parameters

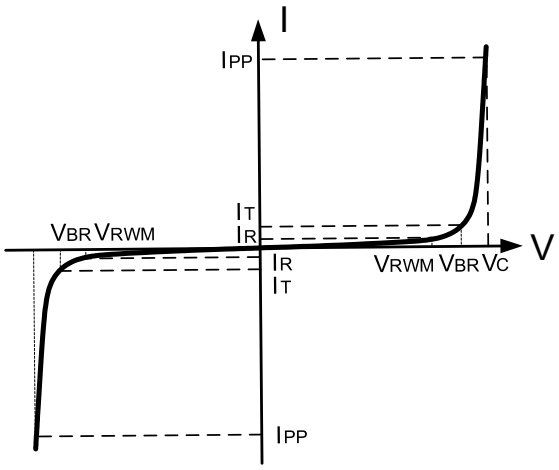

Symbol	Parameter
I_{PP}	Maximum Reverse Peak Pulse Current
V_C	Clamping Voltage @ I_{PP}
V_{RWM}	Working Peak Reverse Voltage
I_R	Maximum Reverse Leakage Current @ V_{RWM}
I_T	Test Current
V_{BR}	Breakdown Voltage @ I_T

8.Typical characteristic

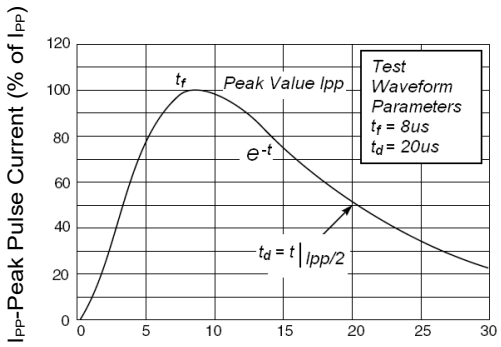

Figure 1: Pulse Waveform

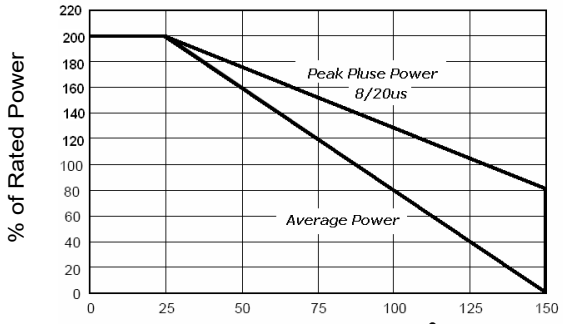

Figure 2: Power Derating

9.SOD-323 Package Outline Dimensions

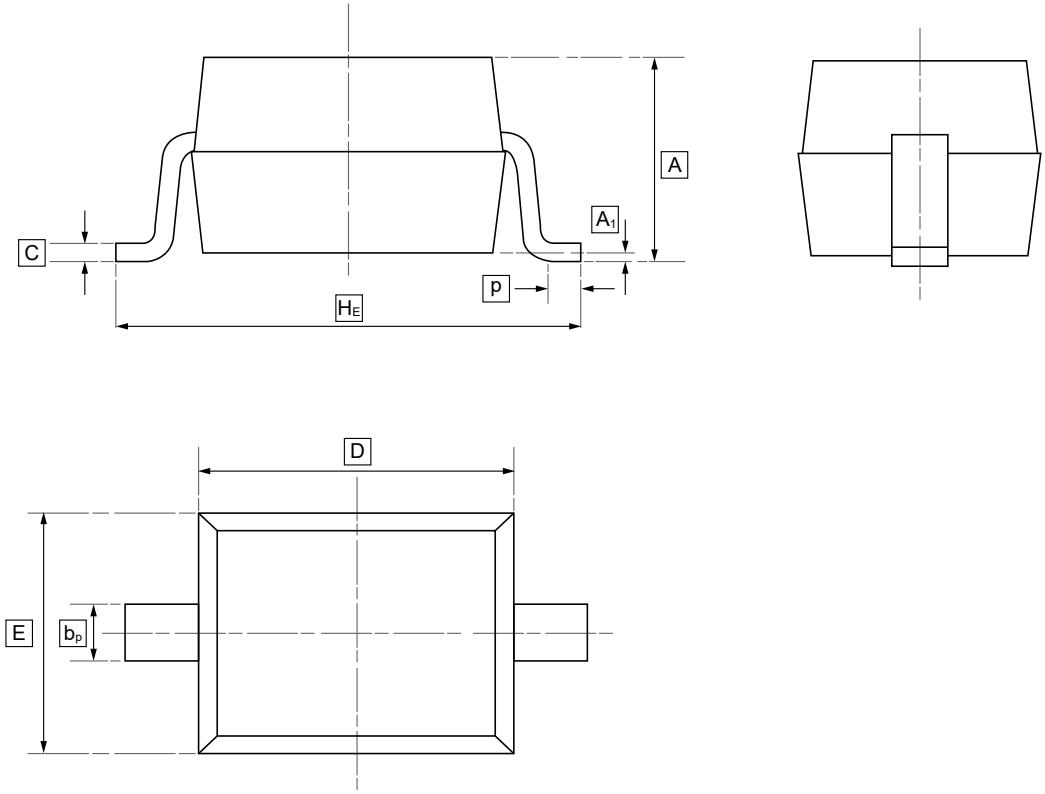

DIMENSIONS (mm are the original dimensions)

Symbol	A	b_p	C	D	E	H_E	A_1	p
Min	0.80	0.25	0.10	1.50	1.15	2.30	0.01	0.20
Max	1.20	0.40	0.15	1.80	1.35	2.80	0.10	0.50

10.Ordering information

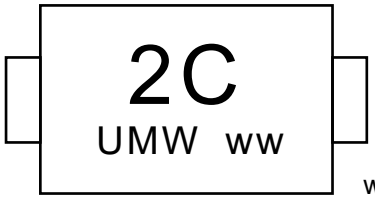

ww: Batch Code

Order Code	Package	Base QTY	Delivery Mode
UMW SESD3Z08C	SOD-323	3000	Tape and reel

11.Disclaimer

UMW reserves the right to make changes to all products, specifications. Customers should obtain the latest version of product documentation and verify the completeness and currency of the information before placing an order.

When applying our products, please do not exceed the maximum rated values, as this may affect the reliability of the entire system. Under certain conditions, any semiconductor product may experience faults or failures. Buyers are responsible for adhering to safety standards and implementing safety measures during system design, prototyping, and manufacturing when using our products to prevent potential failure risks that could lead to personal injury or property damage.

Unless explicitly stated in writing, UMW products are not intended for use in medical, life-saving, or life-sustaining applications, nor for any other applications where product failure could result in personal injury or death. If customers use or sell the product for such applications without explicit authorization, they assume all associated risks.

When reselling, applying, or exporting, please comply with export control laws and regulations of China, the United States, the United Kingdom, the European Union, and other relevant countries, regions, and international organizations.

This document and any actions by UMW do not grant any intellectual property rights, whether express or implied, by estoppel or otherwise. The product names and marks mentioned herein may be trademarks of their respective owners.