# UMW SMxx

TVS Diode Array

## 1.Description

The SMxx Series is designed for applications requiring transient overvoltage protection capability. They are intended for use in voltage and ESD sensitive equipment such as computers,printers, business machines, communication systems, medical equipment and other applications. These devices are ideal for situations where board space is at a premium.

## 2.Features

- IEC61000-4-2 (ESD) ±15kV (air), ±8kV (contact)
- IEC61000-4-4 (EFT) 40A (5/50ηs)
- 350 Watts Peak Pulse Power per ($t_p$=8/20μs)
- Protects one bidirectional line or two
- unidirectional lines
- Low clamping voltage
- Working voltages : 3.3V to 36V
- Low leakage current

## 3.Applications

- Cell Phone Handsets and Accessories
- Microprocessor based equipment
- Personal Digital Assistants (PDA's)
- Notebooks, Desktops, and Servers
- Portable Instrumentation
- Networking and Telecom
- Serial and Parallel Ports.
- Peripherals

## 4.Pinning information

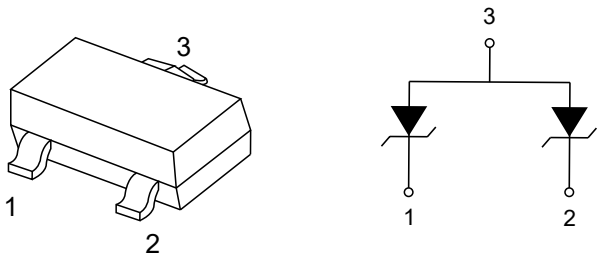


**SOT-23**

## 5.Absolute Maximum Ratings

| Parameter | Symbol | Value | Units |
|---|---|---|---|
| ESD per IEC 61000-4-2 (Air) | $V_{ESD}$ | ±15 | kV |
| ESD per IEC 61000-4-2 (Contact) | | ±8 | kV |
| Peak Pulse Power (8/20μs) | $P_{PP}$ | 350 | W |
| Junction Temperature | $T_{OPT}$ | -55 to 150 | °C |
| Storage Temperature | $T_{STG}$ | -55 to 150 | °C |
| Lead Soldering Temperature | $T_L$ | 260 (10 sec.) | °C |

## 6.Electrical Characteristics($T_J$=25°C)

| PART NUMBER | DEVICE MARKING | $V_{RWM}$ (V) (max.) | $V_B$ (V) (min.) | $I_T$ (mA) | $V_C$@1A (V) (max.) | $V_C$ (V) (max.) | $V_C$ (V) (@A) | $I_R$ (μA) (max.) | $C_J$ (pF) (max.) |
|---|---|---|---|---|---|---|---|---|---|
| UMW SM03 | M03 | 3.3 | 4 | 1 | 7.0 | 14 | 20 | 40 | 450 |
| UMW SM05 | M05 | 5 | 6 | 1 | 9.8 | 18 | 17 | 10 | 300 |
| UMW SM08 | M08 | 8 | 8.5 | 1 | 13.4 | 24 | 15 | 2 | 240 |
| UMW SM12 | M12 | 12 | 13.3 | 1 | 19 | 32 | 11 | 1 | 130 |
| UMW SM15 | M15 | 15 | 16.7 | 1 | 24 | 38 | 10 | 1 | 120 |
| UMW SM18 | M18 | 18 | 20 | 1 | 29 | 45 | 9 | 1 | 100 |
| UMW SM24 | M24 | 24 | 26.7 | 1 | 43 | 52 | 7 | 1 | 80 |
| UMW SM36 | M36 | 36 | 40 | 1 | 60 | 75 | 5 | 1 | 60 |

## 7.Typical characteristic

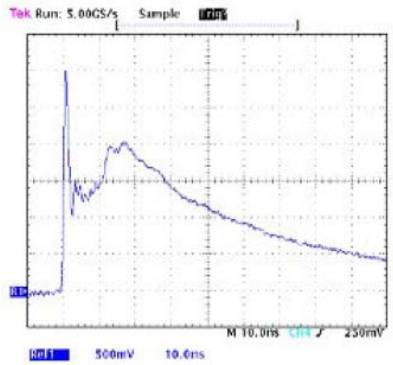


Figure 1: Pulse Waveform

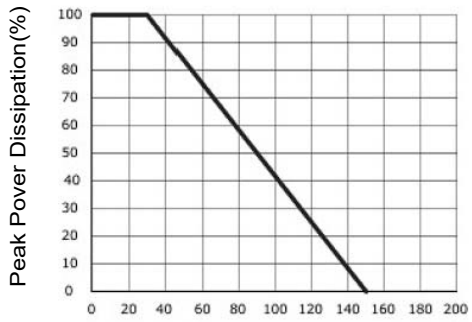


$T_A$, Ambient Temperature (°C)

Figure 2: Power Derating Curve

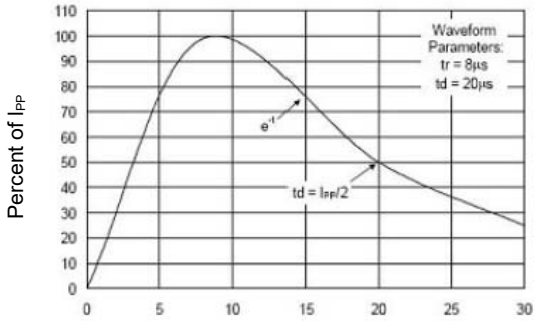


t, Time(μs)

Figure 3: 8/20μs Pulse Waveform

## 8.SOT-23 Package Outline Dimensions

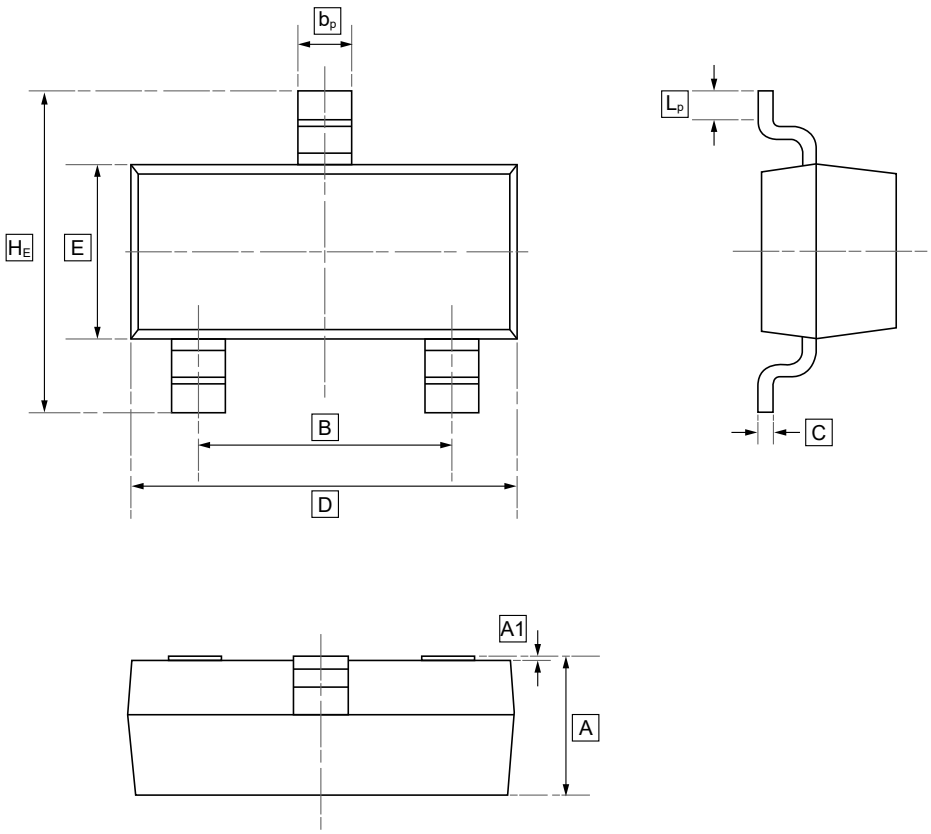


**DIMENSIONS (mm are the original dimensions)**

| Symbol | A | B | $b_p$ | C | D | E | $H_E$ | A1 | $L_p$ |
|---|---|---|---|---|---|---|---|---|---|
| **Min** | 0.95 | 1.78 | 0.35 | 0.08 | 2.70 | 1.20 | 2.20 | 0.013 | 0.20 |
| **Max** | 1.40 | 2.04 | 0.50 | 0.19 | 3.10 | 1.65 | 3.00 | 0.100 | 0.50 |

## 9.Ordering information

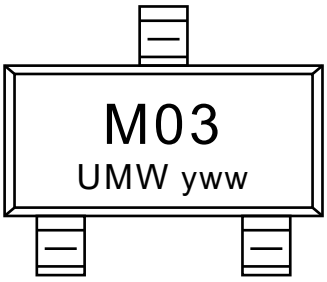


yww: Batch Code

| Order Code | Marking | Package | Base QTY | Delivery Mode |
|---|---|---|---|---|
| UMW SM03 | M03 | SOT-23 | 3000 | Tape and reel |
| UMW SM05 | M05 | SOT-23 | 3000 | Tape and reel |
| UMW SM08 | M08 | SOT-23 | 3000 | Tape and reel |
| UMW SM12 | M12 | SOT-23 | 3000 | Tape and reel |
| UMW SM15 | M15 | SOT-23 | 3000 | Tape and reel |
| UMW SM24 | M24 | SOT-23 | 3000 | Tape and reel |
| UMW SM36 | M36 | SOT-23 | 3000 | Tape and reel |

## 10.Disclaimer

UMW reserves the right to make changes to all products, specifications. Customers should obtain the latest version of product documentation and verify the completeness and currency of the information before placing an order.

When applying our products, please do not exceed the maximum rated values, as this may affect the reliability of the entire system. Under certain conditions, any semiconductor product may experience faults or failures. Buyers are responsible for adhering to safety standards and implementing safety measures during system design, prototyping, and manufacturing when using our products to prevent potential failure risks that could lead to personal injury or property damage.

Unless explicitly stated in writing, UMW products are not intended for use in medical, life-saving, or life-sustaining applications, nor for any other applications where product failure could result in personal injury or death. If customers use or sell the product for such applications without explicit authorization, they assume all associated risks.

When reselling, applying, or exporting, please comply with export control laws and regulations of China, the United States, the United Kingdom, the European Union, and other relevant countries, regions, and international organizations.

This document and any actions by UMW do not grant any intellectual property rights, whether express or implied, by estoppel or otherwise. The product names and marks mentioned herein may be trademarks of their respective owners.