1.Description

The UMW SN74LV1T08 is a single, level translating 2-input AND gate. The input is designed with a lower threshold circuit to match 1.8V input logic at V_{CC}=3.3V and can be used in 1.8V to 3.3V level up translation. In addition, the 5V tolerant input pins enable level down translation (3.3V to 2.5V output at V_{CC}=2.5V). The output level is referenced to the supply voltage and supports 1.8V, 2.5V, 3.3V and 5.0V CMOS levels. The wide V_{CC} range of 1.6V to 5.5V allows generation of desired output levels to connect to controllers or processors.

2.1Features

- Single supply voltage translator at 1.8V, 2.5V, 3.3V and 5.0V
- Logic output is referenced to V_{CC}
- Input accept voltages up to 5V
- ESD protection:
  HBM Exceeds 2000V
  CDM Exceeds 1000V
- Latch-up performance exceeds 250mA
- Specified from -40°C to +85°C and from -40°C to +125°C

2.2Features

- Up Translation Mode
  1.2V(1) to 1.8V at 1.8V V_{CC}
  1.5V(1) to 2.5V at 2.5V V_{CC}
  1.8V(1) to 3.3V at 3.3V V_{CC}
  3.3V to 5.0V at 5.0V V_{CC}
- Down Translation Mode
  3.3V to 1.8V at 1.8V V_{CC}
  3.3V to 2.5V at 2.5V V_{CC}
  5.0V to 3.3V at 3.3V V_{CC}

3.Pinning information

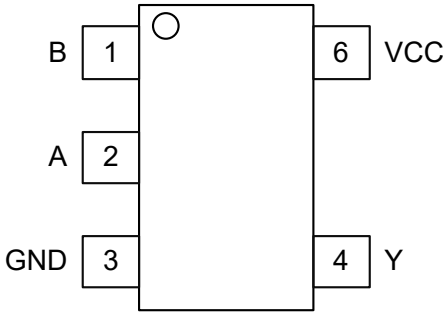

SOT23-5/SC70-5

Figure 1. Pin configuration

4.Pin Function

Pin No.	Pin Name	I/O	Description
1	B	I	Data input
2	A	I	Data input
3	GND	/	Ground
4	Y	O	Data output
5	V_{CC}	/	Supply voltage

5.Block Diagram

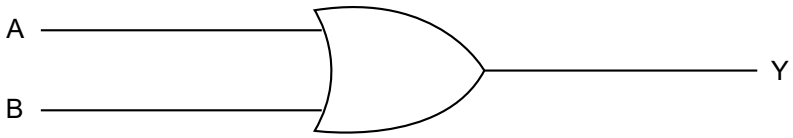

Function Table

Input	Input	Output
A	**B**	**Y**
L	L	L
L	H	L
H	L	L
H	H	H

Notes:

H = HIGH voltage level;

L = LOW voltage level.

6.Limiting Values

Parameter	Symbol	Conditions	Min.	Max.	Unit
Supply voltage	V_{CC}		-0.5	+7	V
Input voltage	V_I		-0.5	+7	V
Input clamping current	I_{IK}	V_I<0V (1)	-20		mA
Output clamping current	I_{OK}	V_O<0V or V_O>V_{CC} (1)	-20	+20	mA
Output voltage	V_O	Active mode	-0.5	V_{CC}+0.5	V
		Power-down mode	-0.5	+4.6	V
Output current	I_O	V_O=0V to V_{CC}	-25	+25	mA
Supply current	I_{CC}			+50	mA
Ground current	I_{GND}		-50		mA
Storage temperature	T_{STG}		-65	+150	°C
Thermal resistance,junction to ambient	R_{thJA}			239	°C/W
Latch up	I_{LU}	T_A= 25°C,125°C	250		mA
ESD human-body model	ESD-HBM	T_A= 25°C	2000		V
ESD charged-device model	ESD-CDM	T_A= 25°C	1000		V

Notes:

(1) The input and output voltage ratings may be exceeded if the input and output current ratings are observed.

7.Recommended Operating Condition(Unless Otherwise Specified,T_A=25 C)

Voltages are referenced to GND (ground = 0V)

Parameter	Symbol	Conditions	Min.	Typ.	Max.	Unit
Supply voltage	V_{CC}		1.6		5.5	V
Input voltage	V_I		0		5.5	V
Output voltage	V_O		0		V_{CC}	V
Ambient temperature	T_A		-40	+25	+125	°C
Input transition rise and fall rate	$\Delta t/\Delta V$	V_{CC}= 1.8V to 5.5V			20	ns/V

8.Electrical Characteristics

DC Electrical Characteristics

Parameter	Symbol	Test condition	25°C		−40°C to 85°C		−40°C to 125°C		Units
			Min.	Max.	Min.	Max.	Min.	Max.	
HIGH-level input voltage	V_{IH}	V_{CC}=1.65V to 1.8V	0.94		1.0		1.0		V
		V_{CC}=2V	0.99		1.03		1.03		V
		V_{CC}=2.25V to 2.5V	1.135		1.18		1.18		V
		V_{CC}=2.75V	1.21		1.23		1.23		V
		V_{CC}=3V to 3.3V	1.35		1.37		1.37		V
		V_{CC}=3.6V	1.47		1.48		1.48		V
		V_{CC}=4.5V to 5.5V	2.02		2.03		2.03		V
		V_{CC}=5.5V	2.10		2.11		2.11		V
LOW-level input voltage	V_{IL}	V_{CC}=1.65V to 2V		0.58		0.55		0.55	V
		V_{CC}=2.25V to 2.75V		0.75		0.71		0.71	V
		V_{CC}=3V to 3.6V		0.80		0.80		0.80	V
		V_{CC}=4.5V to 5.5V		0.80		0.80		0.80	V
HIGH-level output voltage	V_{OH}	V_I=V_{IH} or V_{IL}							V
		I_O=-20μA; V_{CC}=1.65V to 5.5V	V_{CC}-0.1		V_{CC}-0.1		V_{CC}-0.1		V
		I_O=-2mA; V_{CC}=1.65V	1.28		1.21		1.21		V
		I_O=-2mA; V_{CC}=1.8V	1.5		1.45		1.45		V
		I_O=-2.3mA; V_{CC}=2.3V	2.0		2.0		2.0		V
		I_O=-3mA; V_{CC}=2.3V	2.0		1.93		1.93		V
		I_O=-3mA; V_{CC}=2.5V	2.25		2.15		2.15		V
		I_O=-3mA; V_{CC}=3V	2.78		2.7		2.7		V
		I_O=-5.5mA; V_{CC}=3V	2.6		2.49		2.49		V
		I_O=-5.5mA; V_{CC}=3.3V	2.9		2.8		2.8		V
		I_O=-4mA; V_{CC}=4.5V	42		4.1		4.1		V
		I_O=-8mA; V_{CC}=4.5V	4.1		3.95		3.95		V
		I_O=-8mA; V_{CC}=5V	4.6		4.5		4.5		V

Parameter	Symbol	Test condition	25°C		−40°C to 85°C		−40°C to 125°C		Units
			Min.	Max.	Min.	Max.	Min.	Max.	
LOW-level output voltage	V_{OL}	I_O=20μA, V_{CC}=1.65V to 5.5V		0.1		0.1		0.1	V
		I_O=2mA, V_{CC}=1.65V		0.2		0.25		0.25	V
		I_O=2.3mA, V_{CC}=2.3V		0.1		0.15		0.15	V
		I_O=3mA, V_{CC}=2.3V		0.15		0.2		0.2	V
		I_O=3mA, V_{CC}=3V		0.1		0.15		0.15	V
		I_O=5.5mA, V_{CC}=3V		0.2		0.25		0.25	V
		I_O=4mA, V_{CC}=4.5V		0.15		0.2		0.2	V
		I_O=8mA, V_{CC}=4.5V		0.3		0.35		0.35	V
Input leakage current	I_I	V_I=5.5V or GND V_{CC}=0V to 5.5V		±0.1		±0.1		±0.1	μA
Supply current	I_{CC}	V_I=V_{CC} or GND, I_O=0A V_{CC}=1.65V to 5.5V		1		10		10	μA
Additional supply current	ΔI_{CC}	Per input pin, V_{CC}=1.8V V_I=0.3V or 1.1V I_O=0A, other pins at V_{CC} or GND		10		10		10	μA
		Per input pin, V_{CC}=5.5V V_I=0.3V or 3.4V I_O=0A, other pins at V_{CC} or GND		1.35		1.5		1.5	mA

9.Dynamic Characteristic

GND=0V. For test circuit, see WAVEFORMS.

Parameter	Symbol	Test condition	−40°C to 125°C					Units
			Min.	Typ. 25°C	Max. 25°C	Max. 85°C	Max. 125°C	
Propagation delay	t_{pd}	A, B to Y (1)						
		V_{CC}=1.8V, C_L=15pF		9.3	14.0	16.2	16.7	ns
		V_{CC}=1.8V, C_L=30pF		10.2	15.3	17.9	18.4	ns
		V_{CC}=2.5V, C_L=15pF		5.9	8.6	10.1	10.6	ns
		V_{CC}=2.5V, C_L=30pF		6.6	9.6	11.1	11.6	ns
		V_{CC}=3.3V, C_L=15pF		4.4	6.2	7.2	7.5	ns
		V_{CC}=3.3V, C_L=30pF		5.2	7.3	8.6	8.9	ns
		V_{CC}=5V, C_L=15pF		3.4	4.4	4.9	5. 1	ns
		V_{CC}=5V, C_L=30pF		3.6	4.7	5.2	5.4	ns
Input capacitance	C_I			3.6	10	10	10	pF

Notes:

(1) t_{pd} is the same as t_{PLH} and t_{PHL}.

10.Waveforms

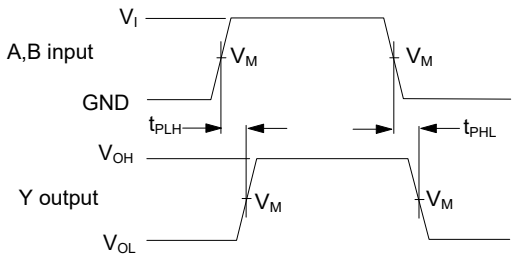

Fig.4 The input (A, B) to output (Y) propagation delays

V_{OL} and V_{OH} are typical voltage output levels that occur with the output load.Measurement points: V_M=0.5*V_{CC}

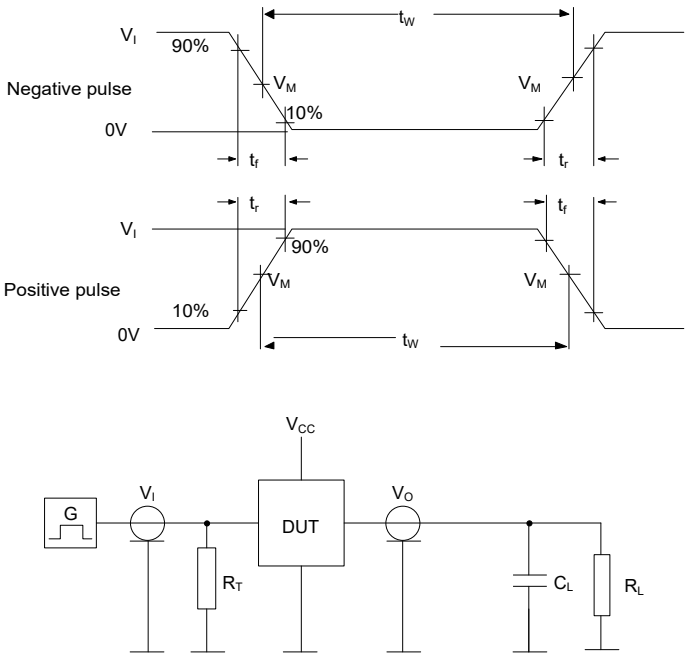

Fig.5 Definitions test circuit

R_T= Termination resistance should be equal to output impedance Z_O of the pulse generator

C_L= Load capacitance including jig and probe capacitance

R_L= Load resistor

11.Test data

Supply voltage	Input			Load	
	V_I	t_r, t_f	f_{max}	C_L	R_L
1.8V	V_{CC}	≤ 3.0ns	15MHz	15pF, 30pF	1MΩ
2.5V	V_{CC}	≤ 3.0ns	25MHz	15pF, 30pF	1MΩ
3.3V	3V	≤ 3.0ns	50MHz	15pF, 30pF	1MΩ
5V	3V	≤ 3.0ns	50MHz	15pF, 30pF	1MΩ

12.1 SC70-5 Package Outline Dimensions

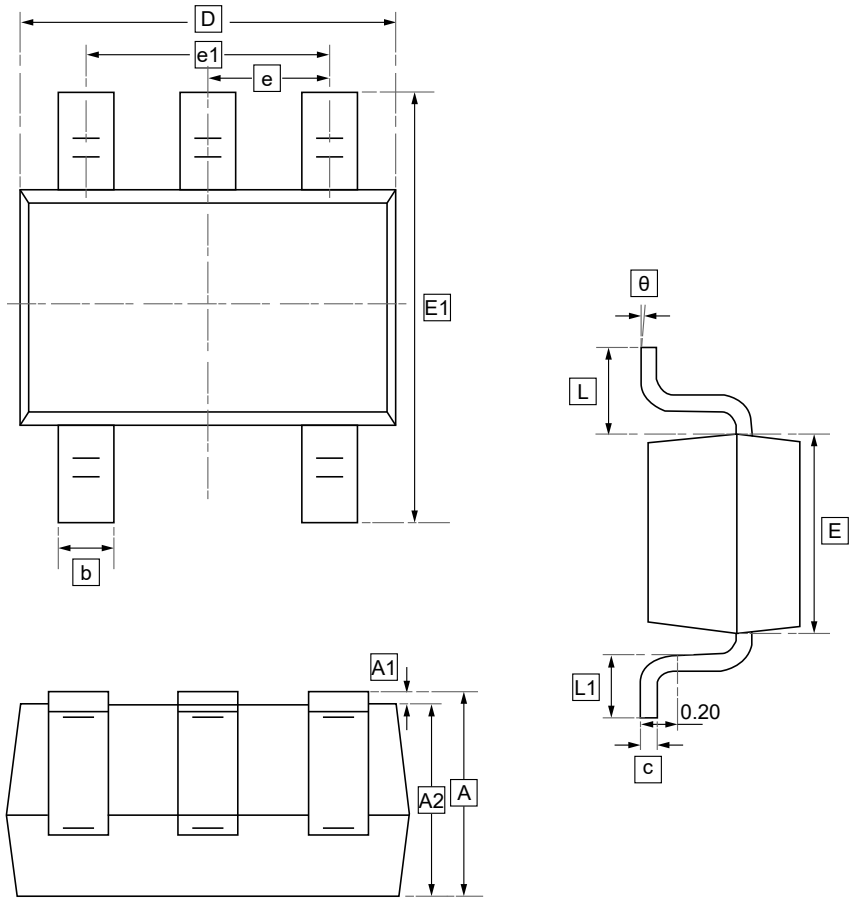

DIMENSIONS (mm are the original dimensions)

Symbol	A	A1	A2	b	c	D	E	E1	e	e1	L	θ
Min	0.90	0.00	0.90	0.15	0.08	1.80	1.15	2.15	0.65	1.20	0.26	7°
Max	1.10	0.10	1.00	0.35	0.15	2.25	1.35	2.45	TYP	1.40	0.46	REF.

12.2 SOT23-5 Package Outline Dimensions

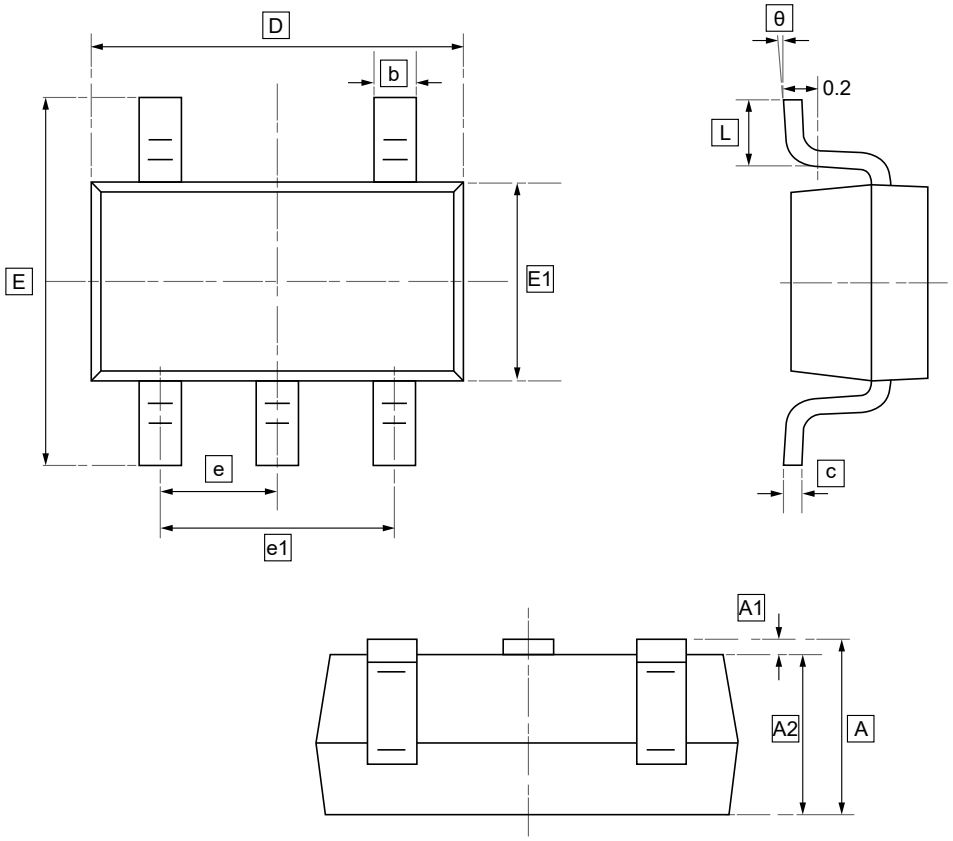

DIMENSIONS (mm are the original dimensions)

Symbol	A	A1	A2	b	c	D	E1	E	e	e1	L	θ
Min	1.050	0.000	1.050	0.300	0.100	2.820	1.500	2.650	0.950	1.800	0.300	0°
Max	1.250	0.100	1.150	0.500	0.200	3.020	1.700	2.950	BSC	2.000	0.600	8°

13.Ordering Information

SOT23-5

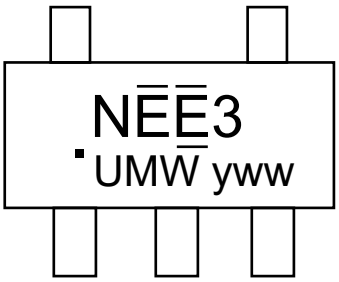

SC70-5

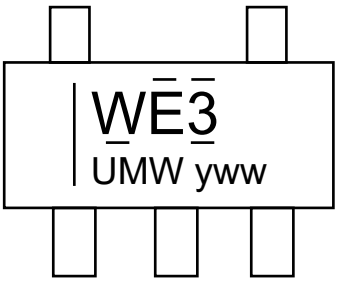

yww: Batch Code

Order Code	Marking	Package	Base QTY	Delivery Mode
UMW SN74LV1T08DBVR	NEE3	SOT23-5	3000	Tape and reel
UMW SN74LV1T08DCKR	WE3	SC70-5	3000	Tape and reel



14.Disclaimer

UMW reserves the right to make changes to all products, specifications. Customers should obtain the latest version of product documentation and verify the completeness and currency of the information before placing an order.

When applying our products, please do not exceed the maximum rated values, as this may affect the reliability of the entire system. Under certain conditions, any semiconductor product may experience faults or failures. Buyers are responsible for adhering to safety standards and implementing safety measures during system design, prototyping, and manufacturing when using our products to prevent potential failure risks that could lead to personal injury or property damage.

Unless explicitly stated in writing, UMW products are not intended for use in medical, life-saving, or life-sustaining applications, nor for any other applications where product failure could result in personal injury or death. If customers use or sell the product for such applications without explicit authorization, they assume all associated risks.

When reselling, applying, or exporting, please comply with export control laws and regulations of China, the United States, the United Kingdom, the European Union, and other relevant countries, regions, and international organizations.

This document and any actions by UMW do not grant any intellectual property rights, whether express or implied, by estoppel or otherwise. The product names and marks mentioned herein may be trademarks of their respective owners.