1.Description

The UMW SN74LVC1G86 is a high performance single 2−input Exclusive −OR Gate operating from a 2.3V to 5.5V supply.

2.1 Features

- Tiny SC70-5, SOT23-5 and DFN6-1.0mm*1.5mm Packages
- Extremely High Speed: tPD 2.5ns (typical) at V_{CC}=5.0V

2.2 Features

- Over Voltage Tolerant Inputs V_{IN} may be Between 0 and 7.0V for V_{CC} Between 0.5 and 5.5V
- TTL Compatible − Interface Capability with 5.0V TTL Logic with V_{CC}=2.7V to 3.6V
- LVCMOS Compatible
- 24mA Output Sink Capability, Pullup may be between 0 and 7.0V
- Near Zero Static Supply Current Substantially
- Reduces System Power Requirements Chip Complexity: FET = 20
- These Devices are Pb−Free, Halogen Free/BFR Free and are RoHS Compliant

3.Pinning information

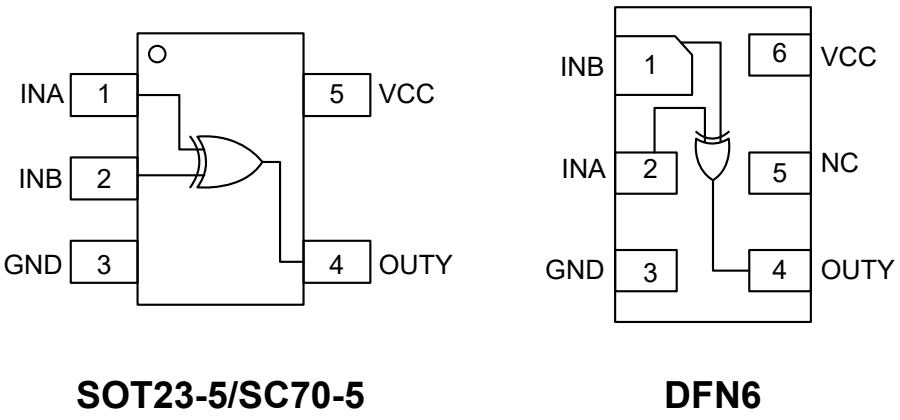

SOT23-5/SC70-5 **DFN6**

Figure1. Top View

4.Pin Function

(SC70 -5/ SOT23-5 /DFN6)

Pin	Function
1	INB
2	INA
3	GND
4	Y
5	VCC

5.Block Diagram

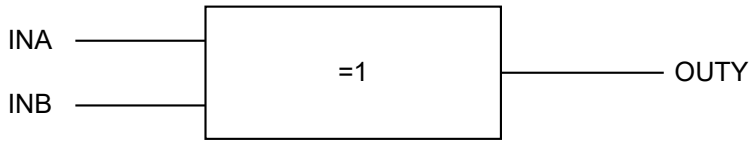

Figure2. Logic Symbol

Function Table

Input		Output
A	**B**	**Y**
L	L	L
L	H	H
H	L	H
H	H	L

6.Absolute Maximum Ratings

Parameter		Symbol	Value	Units
DC Supply Voltage		V_{CC}	−0.5 to 7	V
DC Input Voltage		V_I	$-0.5 \le V_I \le 7$	V
DC Output Voltage Output in Higher or Low State (Note 1)		V_O	−0.5 to V_{CC} + 0.5	V
DC Input Diode Current V_I<GND		I_{IK}	-50	mA
DC Output Diode Current V_O<GND, V_O>V_{CC}		I_{OK}	±50	mA
DC Output Sink Current		I_O	±50	mA
DC Supply Current per Supply Pin		I_{CC}	±100	mA
Storage Temperature Range		T_{STG}	-65 to 150	°C
Lead Temperature, 1 mm from Case for 10 Seconds		T_L	260	°C
Junction Temperature Under Bias		T_J	150	°C
Thermal Resistance	SC70-5 (Note 1)	θ_{JA}	435	°C/W
	SOT23-5		300	°C/W
	DFN6		450	°C/W
Power Dissipation in Still Air at 85°C	SC70-5	P_D	150	mW
	SOT23-5		200	mW
	DFN6		130	mW
Moisture Sensitivity		MSL	Level 1	
Flammability Rating Oxygen Index:28 to 34		F_R	UL94V−0@0.12in	
ESD Classification Human	Body Model (Note 2)	ESD	2000	V
	Machine Model (Note3)		200	V
	Charged Device Model (Note 4)		N/A	V
Latchup Performance Above V_{CC} and Below GND at 125°C (Note 5)		$I_{Latchup}$	±100	mA

Stresses exceeding those listed in the Maximum Ratings table may damage the device. If any of these limits are exceeded, device functionality should not be assumed, damage may occur and reliability may be affected.

1. IO absolute maximum rating must be observed.
2. Tested to EIA/JESD22—A114—A, rated to EIA/JESD22—A114—B.
3. Tested to EIA/JESD22—A115—A, rated to EIA/JESD22—A115—A.
4. Tested to JESD22—C101—A.
5. Tested to EIA/JESD78.

7.Recommended Operating Conditions

Parameter		Symbol	Min	Max	Unit
DC Supply Voltage Operating		V_{CC}	1.65	5.5	V
Date Retention			1.5	5.5	V
DC Input Voltage		V_{IN}	0	5.5	V
DC Output Voltage (High or Low State)		V_{OUT}	0	5.5	V
Operating Temperature Range		T_A	-40	125	°C
Input Rise and Fall Time	V_{CC}=2.5V ± 0.2V	t_r, t_f	0	20	ns/V
	V_{CC}=3V ± 0.3V		0	10	ns/V
	V_{CC}=5V ± 0.5V		0	5	ns/V

8.DC Electrical Characteristics

Parameter	Condition	Symbol	V_{CC}(V)	T_A=25°C			−55°C≤T_A≤125°C		Units
				Min	Typ	Max	Min	Max	
High−Level Input Voltage		V_{IH}	1.65 to1.95	0.75V_{CC}			0.75V_{CC}		V
			2.3 to 5.5	0.7V_{CC}			0.7V_{CC}		
Low−Level Input Voltage		V_{IL}	1.65 to1.95			0.25V_{CC}		0.25V_{CC}	
			2.3 to 5.5			0.3V_{CC}		0.3V_{CC}	
High−Level Output Voltage V_{IN}=V_{IL}	I_{OH}=−100μA	V_{OH}	1.65 to 5.5	V_{CC}-0.1	V_{CC}		V_{CC}-0.1		V
	I_{OH}=−3mA		1.65	1.29	1.52		1.29		
	I_{OH}=−8mA		2.3	1.9	2.1		1.9		
	I_{OH}=−12mA		2.7	2.2	2.4		2.2		
	I_{OH}=−16mA		3	2.4	2.7		2.4		
	I_{OH}=−24mA		3	2.3	2.5		2.3		
	I_{OH}=−32mA		4.5	3.8	4		3.8		
Low−Level Output Voltage V_{IN}=V_{IH}	I_{OL}=100μA	V_{OL}	1.65 to 5.5		0.0	0.1		0.1	V
	I_{OL}=3mA		1.65		0.08	0.24		0.24	
	I_{OL}=8mA		2.3		0.2	0.3		0.3	
	I_{OL}=12mA		2.7		0.22	0.4		0.4	
	I_{OL}=16mA		3		0.28	0.4		0.4	
	I_{OL}=24mA		3		0.38	0.55		0.55	
	I_{OL}=32mA		4.5		0.42	0.55		0.55	
Input Leakage Current	V_{IN}=5.5V or GND	I_{IN}	0 to 5.5		±0.1			±1	μA
Power Off Leakage Current	V_{IN}=5.5V or V_{OUT}=5.5V	I_{OFF}	0			1		10	
Quiescent Supply Current	V_{IN}=5.5V or GND	I_{CC}	5.5			1		10	

9.AC Electrical Characteristics

Parameter	Condition	Symbol	V_{CC}(V)	T_A=25°C			-55°C≤T_A≤125°C		Units
				Min	Typ	Max	Min	Max	
Propagation Delay (Figure 3 and 4)	R_L=1MΩ, C_L=15pF	t_{PLH}, t_{PHL}	1.65	2	5.3	11.4	2	12	ns
			1.8	2	4.4	9.5	2	10	
			2.5±0.2	0.2	3.5	6.5	0.8	4.1	
			3.3±0.3	0.8	2.1	4.5	0.5	3.7	
	R_L=500Ω, C_L=15pF		3.3±0.3	1.2	2.9	5.5	1.5	5.2	
	R_L=1MΩ, C_L=15pF		5.0±0.5	0.5	1.8	3.9	0.5	4.1	
	R_L=500Ω, C_L=50pF		5.0±0.5	0.8	2.4	4.3	0.8	4.5	

10.Capacitance Characteristics

Parameter	Symbol	Condition	Typ	Units
Input Capacitance	C_{IN}	V_{CC}=5.5V, V_I= 0V or V_{CC}	>2.5	pF
Power Dissipation Capacitance (6)	C_{PD}	10MHz,V_{CC}=3.3V, V_I=0V or V_{CC}	4	pF
		10MHz,V_{CC}=5.5V, V_I=0V or V_{CC}	4	pF

Notes 6:

C_{PD} is defined as the value of the internal equivalent capacitance which is calculated from the operating current consumption without load. Average operating current can be obtained by the equation: $I_{CC(OPR)}=C_{PD}*V_{CC}*fin+I_{CC}*C_{PD}$ is used to determine the no−load dynamic power consumption; $P_D=C_{PD}*V_{CC}^2*fin+I_{CC}*V_{CC}*Fig$.

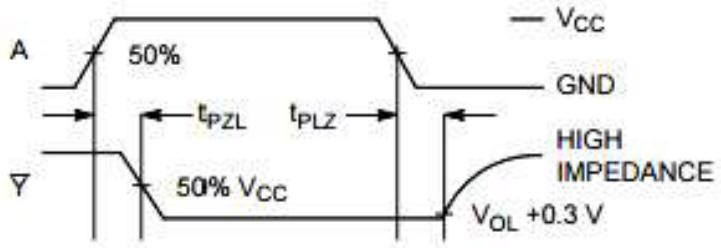

Figure 3. Switch Waveform

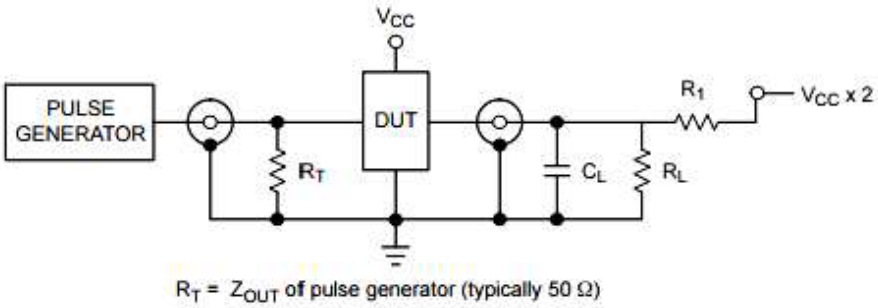

Figure4. Test Circuit

11.1 SC70-5 Package Outline Dimensions

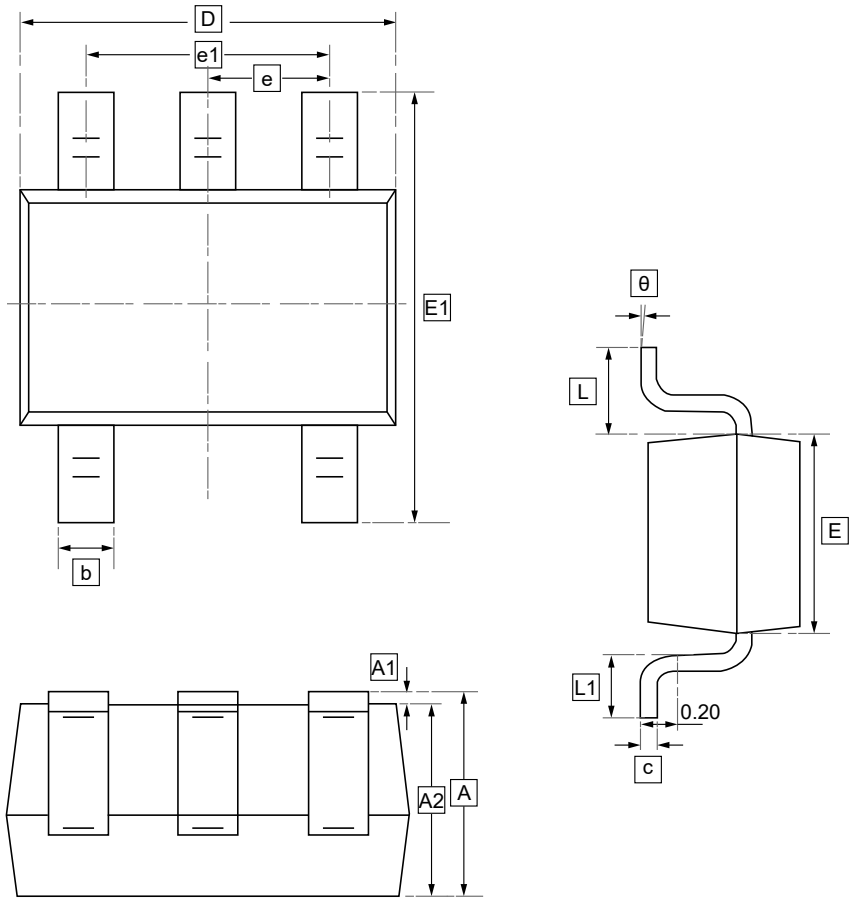

DIMENSIONS (mm are the original dimensions)

Symbol	A	A1	A2	b	c	D	E	E1	e	e1	L	θ
Min	0.90	0.00	0.90	0.15	0.08	1.80	1.15	2.15	0.65	1.20	0.26	7°
Max	1.10	0.10	1.00	0.35	0.15	2.25	1.35	2.45	TYP	1.40	0.46	REF.

11.2 SOT23-5 Package Outline Dimensions

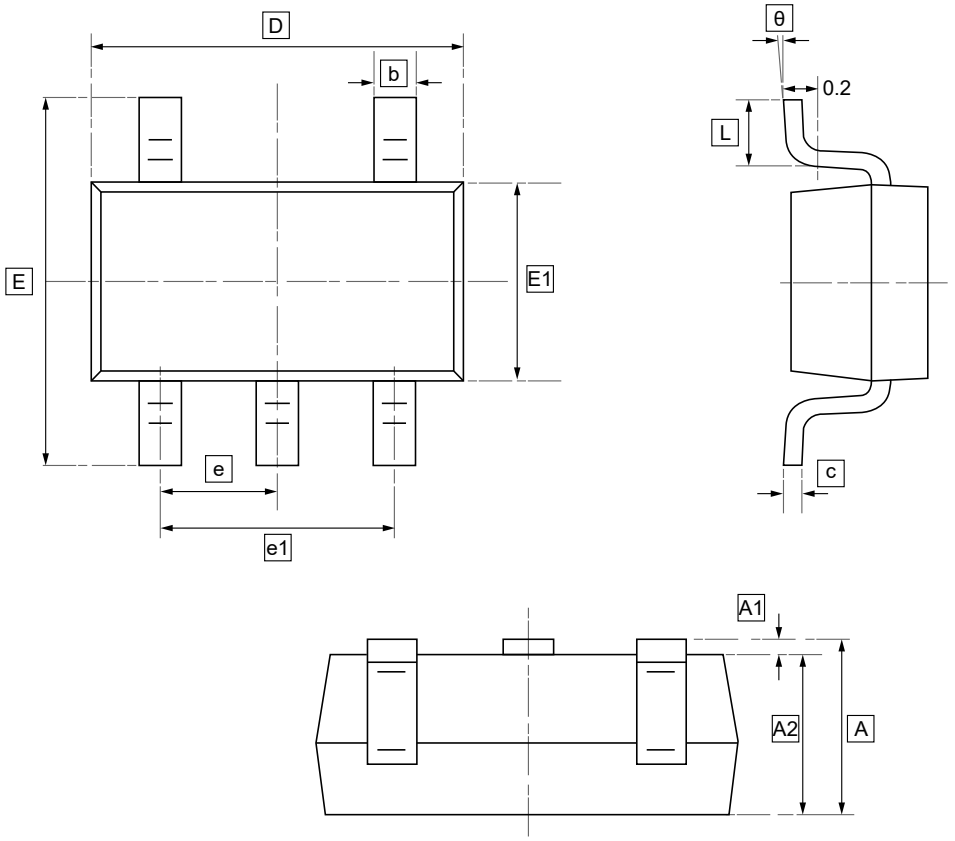

DIMENSIONS (mm are the original dimensions)

Symbol	A	A1	A2	b	c	D	E1	E	e	e1	L	θ
Min	1.050	0.000	1.050	0.300	0.100	2.820	1.500	2.650	0.950	1.800	0.300	0°
Max	1.250	0.100	1.150	0.500	0.200	3.020	1.700	2.950	BSC	2.000	0.600	8°

11.3 DFN6 Package Outline Dimensions

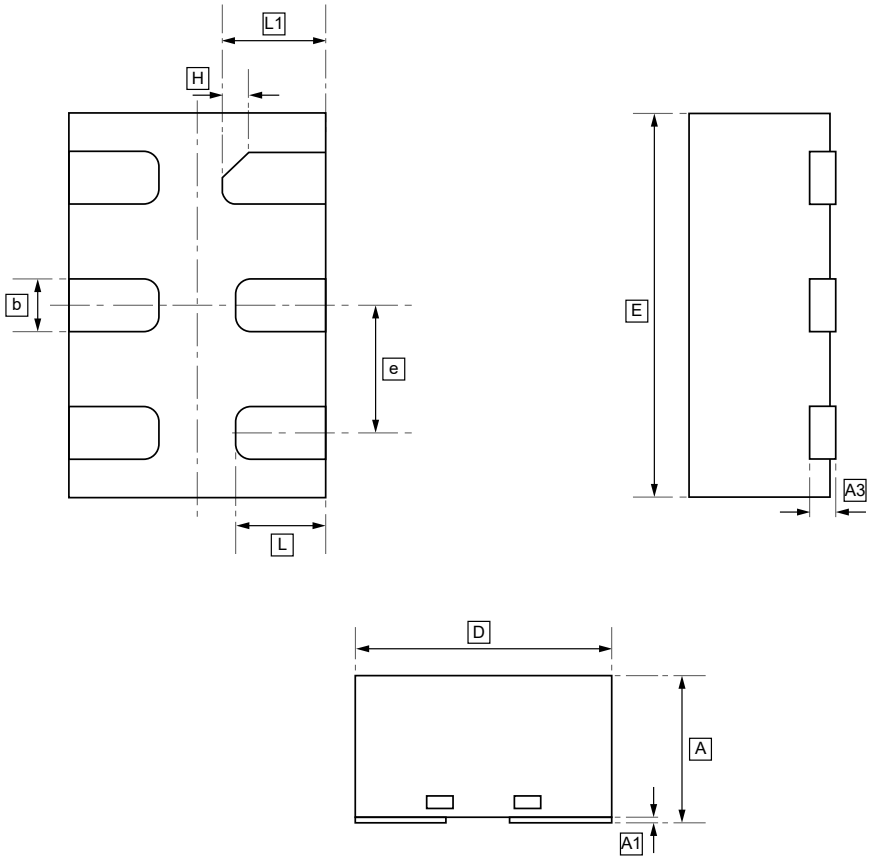

DIMENSIONS (mm are the original dimensions)

Symbol	A	A1	A3	b	D	E	e	H	L	L1
Min	0.50	0	0.10	0.15	0.90	1.40	0.40	0.10	0.30	0.35
Max	0.60	0.05	REF	0.25	1.10	1.60	0.60	REF	0.40	0.45

12.Ordering information

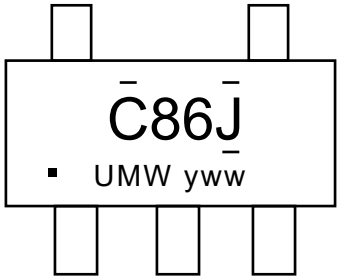

yww: Batch Code

Order Code	Marking	Package	Base QTY	Delivery Mode
UMW SN74LVC1G86DBVR	C86J	SOT23-5	3000	Tape and reel
UMW SN74LVC1G86DCKR	CH5	SC70-5	3000	Tape and reel
UMW SN74LVC1G86DRYR	CH	DFN6	5000	Tape and reel

13.Disclaimer

UMW reserves the right to make changes to all products, specifications. Customers should obtain the latest version of product documentation and verify the completeness and currency of the information before placing an order.

When applying our products, please do not exceed the maximum rated values, as this may affect the reliability of the entire system. Under certain conditions, any semiconductor product may experience faults or failures. Buyers are responsible for adhering to safety standards and implementing safety measures during system design, prototyping, and manufacturing when using our products to prevent potential failure risks that could lead to personal injury or property damage.

Unless explicitly stated in writing, UMW products are not intended for use in medical, life-saving, or life-sustaining applications, nor for any other applications where product failure could result in personal injury or death. If customers use or sell the product for such applications without explicit authorization, they assume all associated risks.

When reselling, applying, or exporting, please comply with export control laws and regulations of China, the United States, the United Kingdom, the European Union, and other relevant countries, regions, and international organizations.

This document and any actions by UMW do not grant any intellectual property rights, whether express or implied, by estoppel or otherwise. The product names and marks mentioned herein may be trademarks of their respective owners.