UMW TL082

General J - FET input dual operational amplifier

1.Description

UMW TL082 is a dual operational amplifier with high-speed J-FET input, which consists of high voltage J-FET and bipolar transistor. It has high conversion rate, low input bias current and offset current, and low temperature coefficient of offset voltage. The working range is 0°C-70°C.

UMW TL082 is available in SOP8 packages.

2.Features

- Lower power consumption
- Wide common- mode and differential - mode input voltage range
- Low input bias current and offset current Output short - circuit current protection
- High input impedance
- High conversion rate
- High gain bandwidth product,up to 4MHz

3.Pinning Information

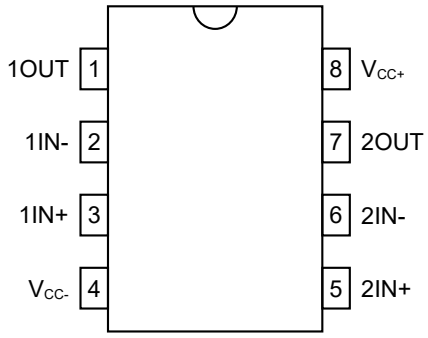

SOP-8

4.Symbol (each operational amplifier)

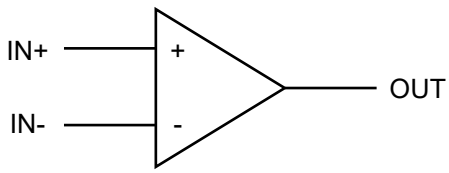

5.Internal Block Diagram (Each Operational Amplifier)

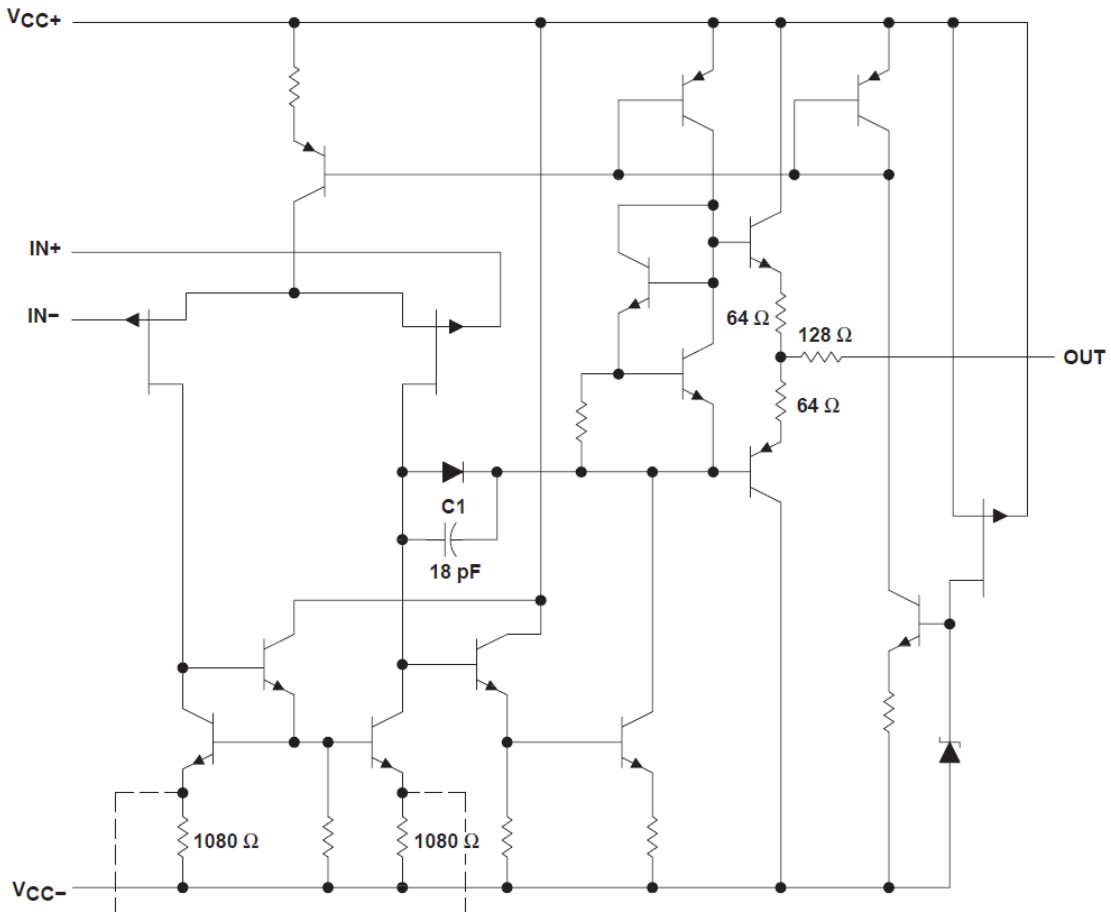

6.Limit Parameter

Parameter		Value	Value	Units
Power Supply Voltage		V_{CC}	±18	V
Input Voltage		V_I	±15	V
Differential Mode Input Power		V_{ID}	±30	V
Working Temperature	UMW TL082I	T_{OPER}	-40 to 105	°C
	UMW TL082C		0 to 70	°C
Storage Temperature		T_{STG}	-65 to 150	°C

7.Electrical Characteristics

V_{CC}=±15, Tamp=25°C shall be specified separately.

Parameter	Symbol	Conditions		Min	Typ	Max	Units
Offset Voltage	V_{IO}	V_O=0V			3	10	mV
Input Offset Current	I_{IO}	V_O=0V			5	100	nA
Output Bias Current	I_{IB}	V_O=0V			20	400	PA
Input Common Mode	V_{ICM}			±11	±15		V
Voltage Range					-12		V
Output voltage swing	±V_{opp}	T_{amb}=+25°C	R_L=2kΩ	10	12		V
			R_L=10kΩ	12	13.5		V
Large Signal Voltage Gain	A_{vd}	R_L=2kΩ, V_O=±10V	T_{amb}=+25°C	50	200		V/mV
			T_{min}≤T_{amb}≤T_{max}	25			V/mV
Common Mode Rejection Ratio	CMRR	V_{CC}=±15V to ±9V, V_O=0V		70	86		dB
Power Supply Rejection Ratio	SVR			70	86		dB
Static Current-per Channel	I_{CC}	V_I=10V			1.4	2.8	mA
Conversion Rate	SR			8	13		V/μs
Risetime	t_r				0.05		μs

Parameter	Symbol	Conditions	Min	Typ	Max	Units
Rise time	t_r	V_{in}=20mV, R_L=2kΩ, C_L=100pF, unity gain		0.1		μs
Overshoot	K_{OV}	V_{in}=20mV, R_L=2kΩ, C_L=100pF, unity gain		10		%
Gain bandwidth product	GBP	V_{in}=10mV, R_L=2kΩ, C_L=100pF, F=100kHz	2.5	4		MHz
Input resistance	R_i			10^{12}		Ω
Total harmonic distortion	THD	F=1kHz, R_L=2kΩ, C_L=100pF A_V=20dB, V_O=2V_{pp}		0.01		%
Equivalent input noise voltage	e_n	R_S=100Ω, F=1KHz		15		nV/√Hz
Phase margin	Ø m			45		degrees
Channel separation	V_{O1}/V_{O2}	A_V=100		120		dB

1. The input bias currents are junction leakage currents which approximately double for every 10°C increase in the junction temperature.

8.1 Typical Characterisitics

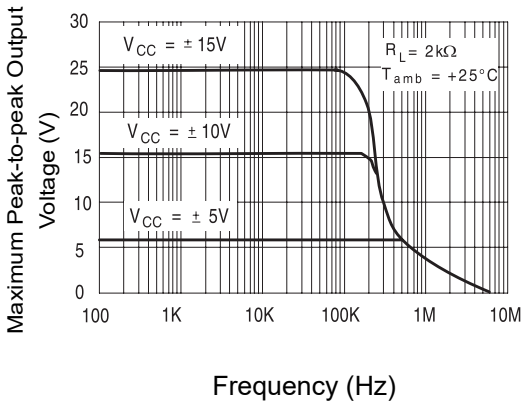

Figure 1: Maximum peak-to-peak output voltage versus frequency

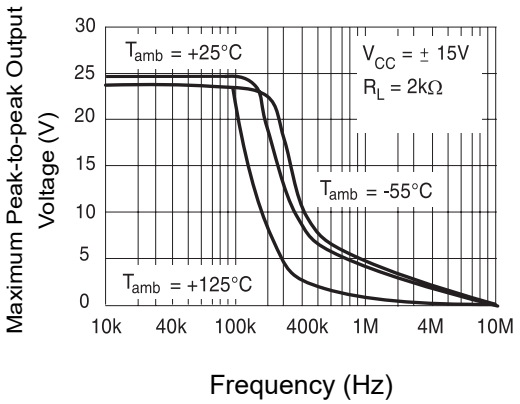

Figure 2: Maximum peak-to-peak output voltage versus frequency

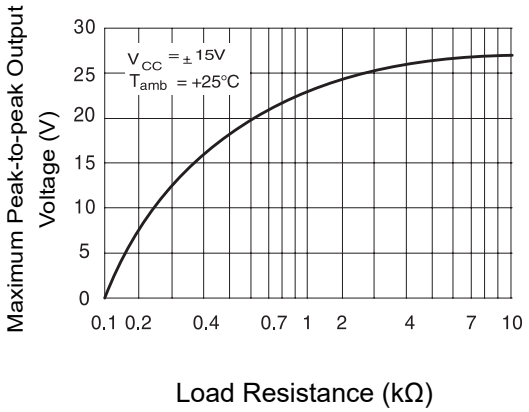

Figure 3: Maximum peak-to-peak output voltage versus load resistance

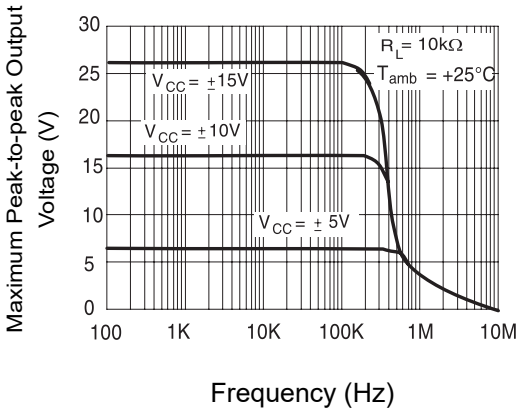

Figure 4: Maximum peak-to-peak output voltage versus frequency

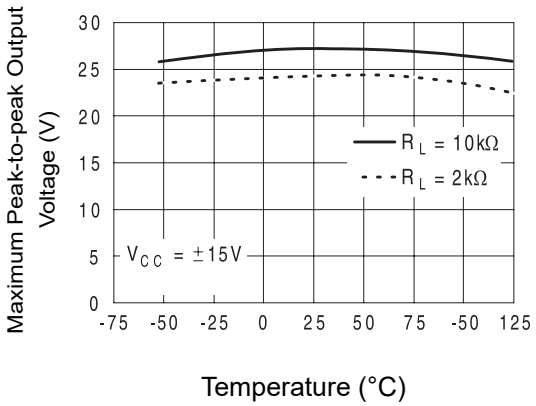

Figure 5: Maximum peak-to-peak output voltage versus free air temperature

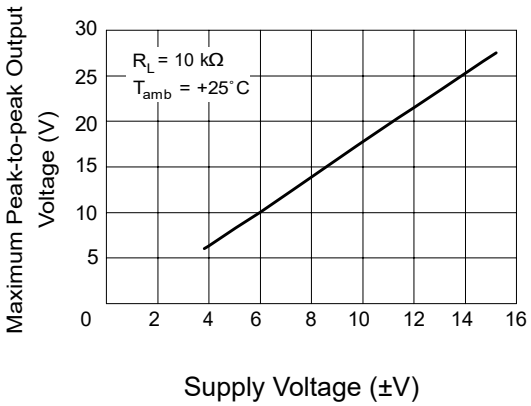

Figure 6: Maximum peak-to-peak output voltage versus supply voltage

8.2 Typical Characterisitics

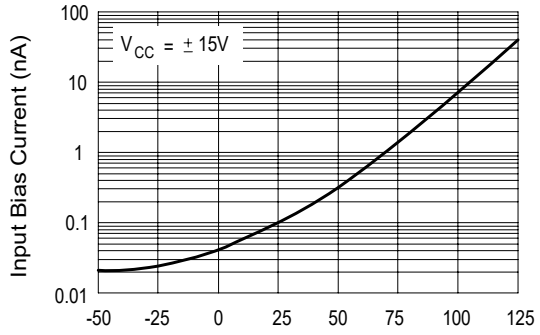

Figure 7: Input bias current versus free air temperature

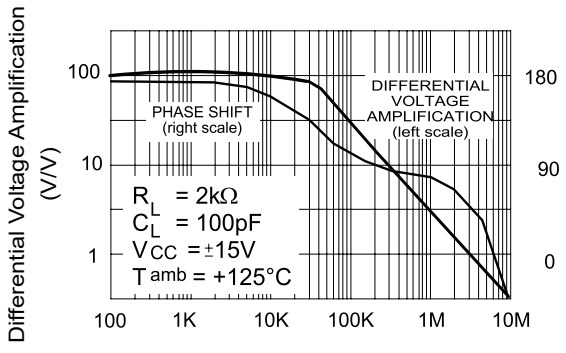

Figure 8: Large signal differential voltage amplification and phase shift versus frequency

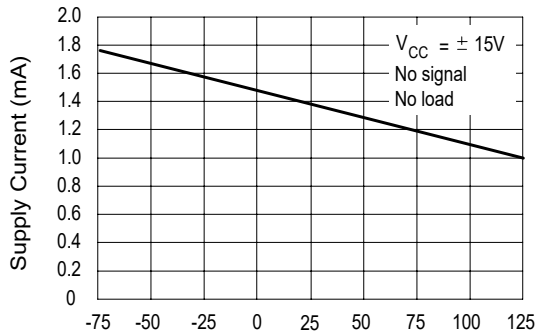

Figure 9: Supply current per amplifier versus free air temperature

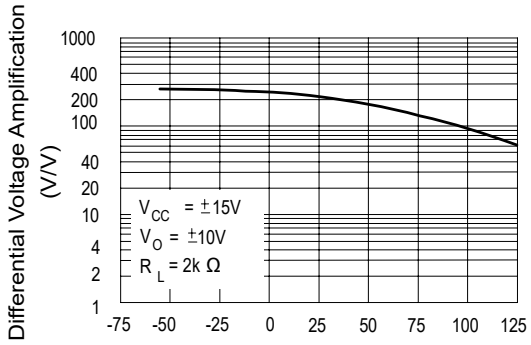

Figure 10: Large signal differential voltage amplification versus free air temp.

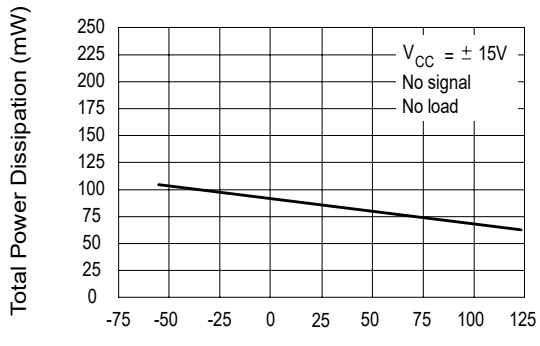

Figure 11: Total power dissipation versus free air temperature

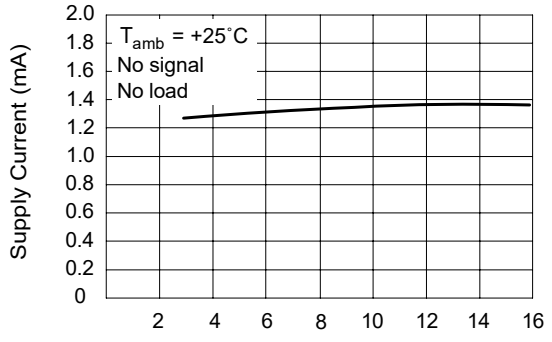

Figure 12: Supply current per amplifier versus supply voltage

8.3 Typical Characterisitics

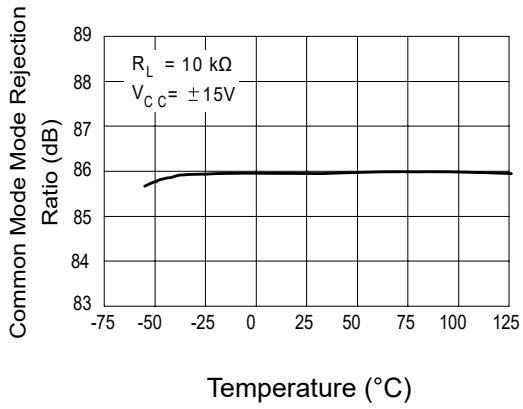

Figure 13: Common mode rejection ratio versus free air temperature

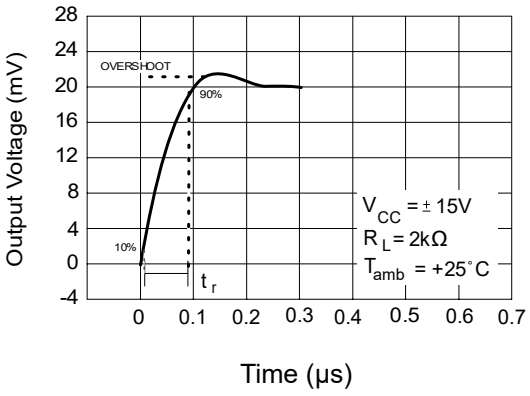

Figure 14: Output voltage versus elapsed time

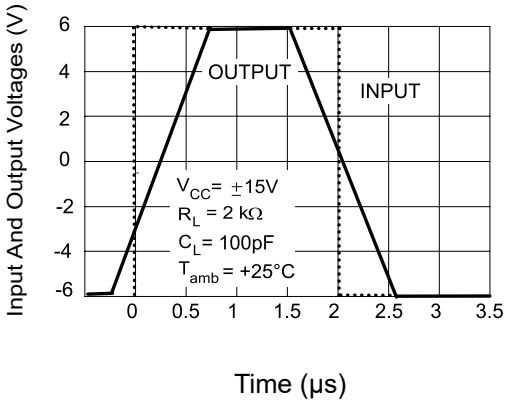

Figure 15: Voltage follower large signal pulse response

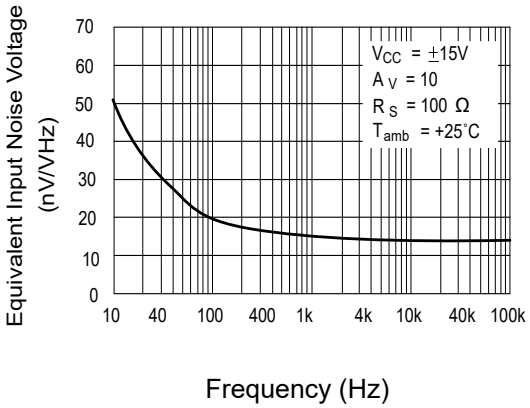

Figure 16: Equivalent input noise voltage versus frequency

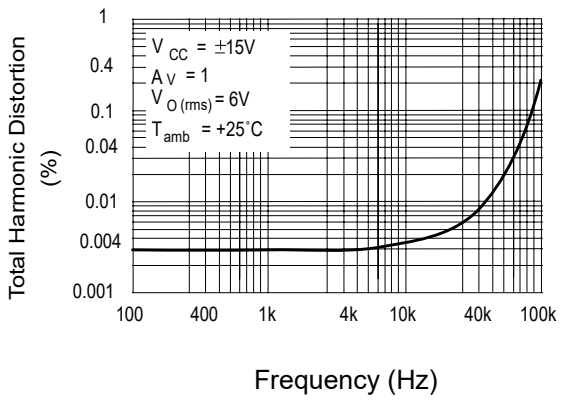

Figure 17: Total harmonic distortion versus frequency

9.Typical Application Circuit Diagram (Including One Operational Amplifier)

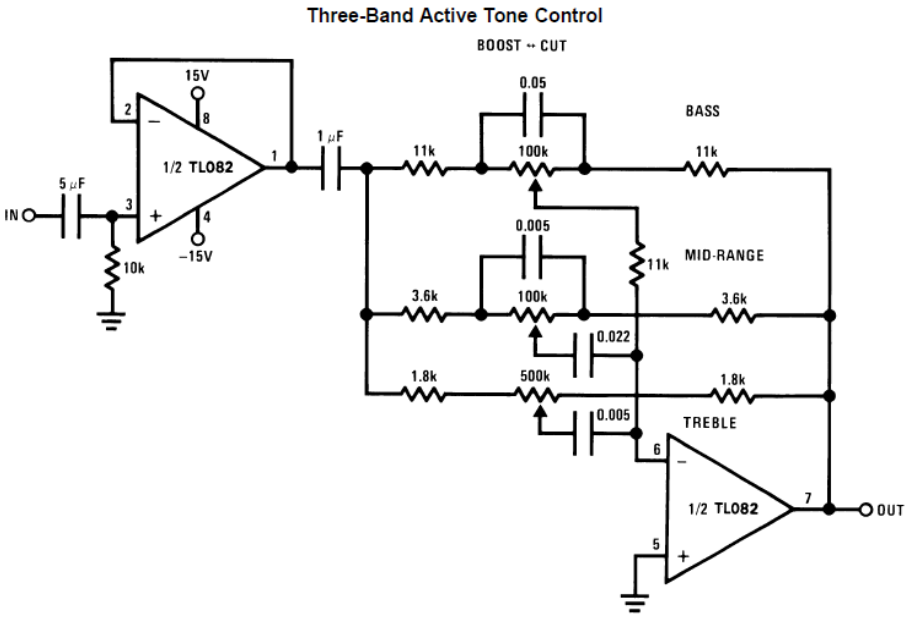

Three - Band Active Tone Control for three- segment tone control.

10. Fourth- Order Low- Pass Filtering

Fourth Order Low Pass Butterworth Filter

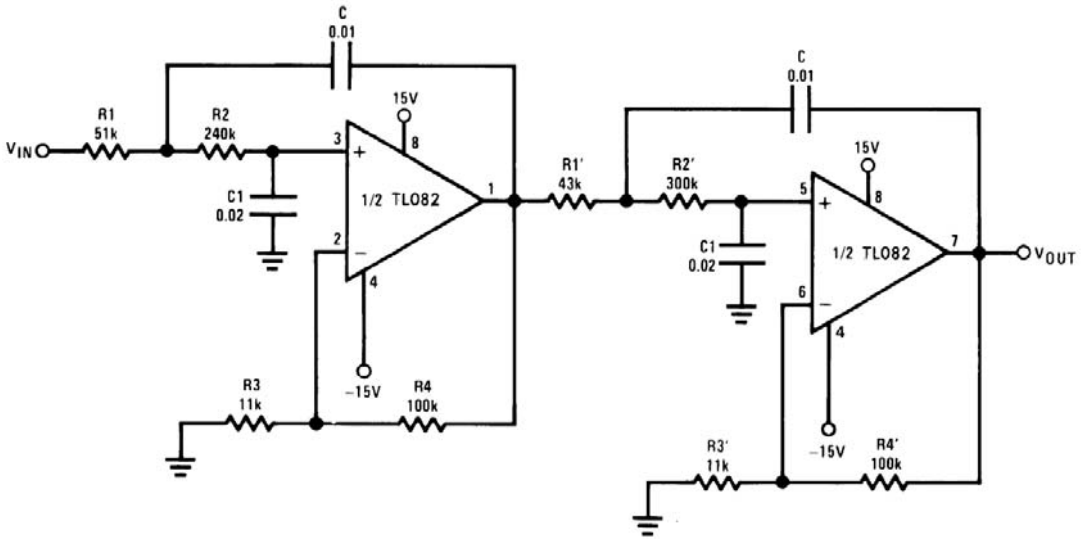

- Corner frequency (f_c) = $\sqrt{\frac{1}{R1R2CC1}} \cdot \frac{1}{2\pi} = \sqrt{\frac{1}{R1'R2'CC1}} \cdot \frac{1}{2\pi}$
- Passband gain (H_O) = (1 + R4/R3) (1 + R4'/R3')
- First stage Q = 1.31
- Second stage Q = 0.541
- Circuit shown uses nearest 5% tolerance resistor values for a filter with a corner frequency of 100 Hz and a passband gain of 100
- Offset nulling necessary for accurate DC performance

11.Fourth-order High-pass Filtering

Fourth Order High Pass Butterworth Filter

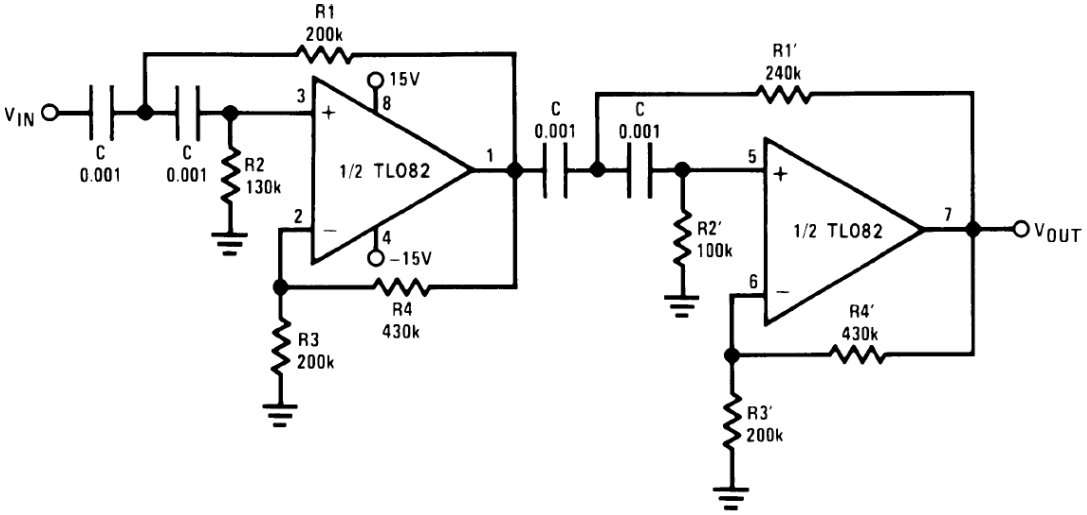

- Corner frequency (f_c) = $\sqrt{\frac{1}{R1R2C^2}} \cdot \frac{1}{2\pi} = \sqrt{\frac{1}{R1'R2'C^2}} \cdot \frac{1}{2\pi}$
- Passband gain (H_O) = (1 + R4/R3) (1 + R4'/R3')
- First stage Q = 1.31
- Second stage Q = 0.541
- Circuit shown uses closest 5% tolerance resistor values for a filter with a corner frequency of 1 kHz and a passband gain of 10

12.Resistance- Voltage Conversion

Ohms to Volts Converter

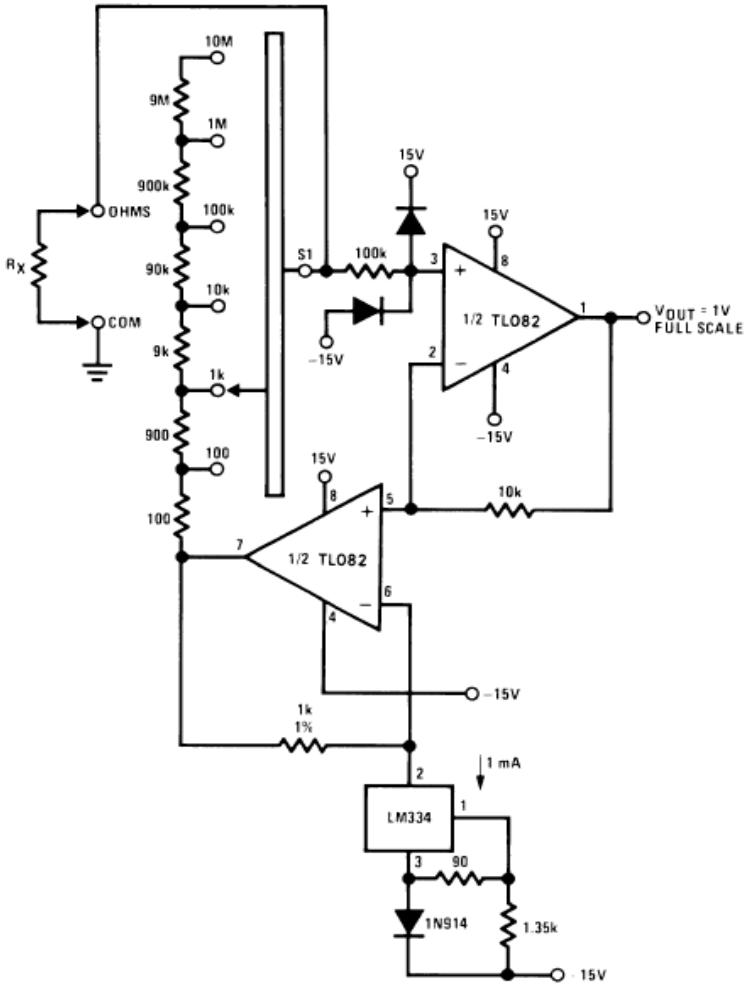

$$V_O = \frac{1V}{R_{LADDER}} \times R_X$$

Where R_{LADDER} is the resistance from switch S1 pole to pin 7 of the TL082CP.

13. Typical Lines

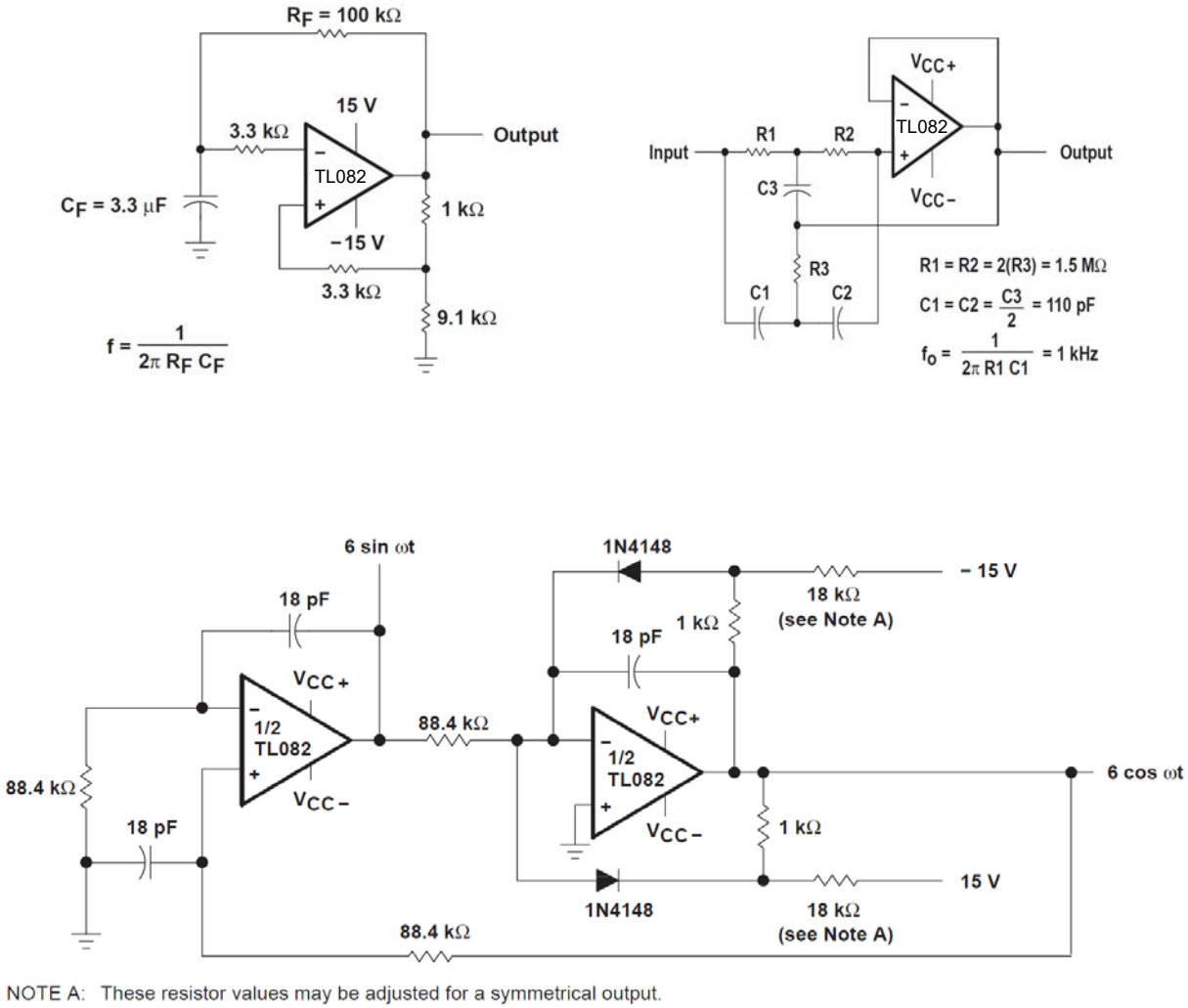

NOTE A: These resistor values may be adjusted for a symmetrical output.

100 kHz quadrature oscillator 100- KHz Quadrature Oscillator

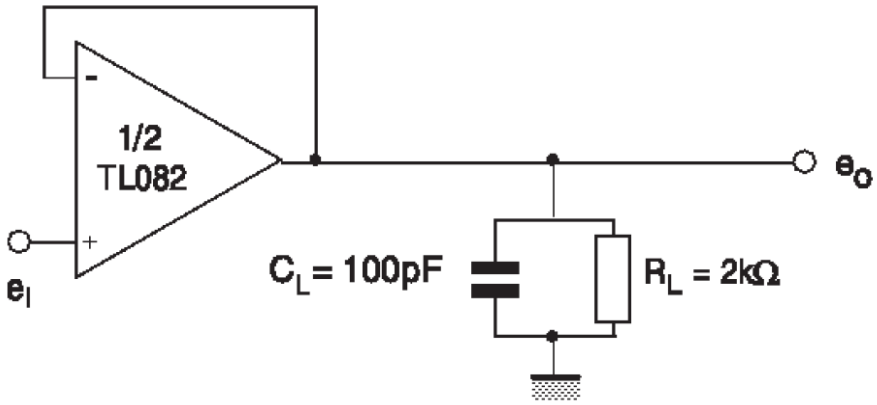

Voltage Follower voltage follower

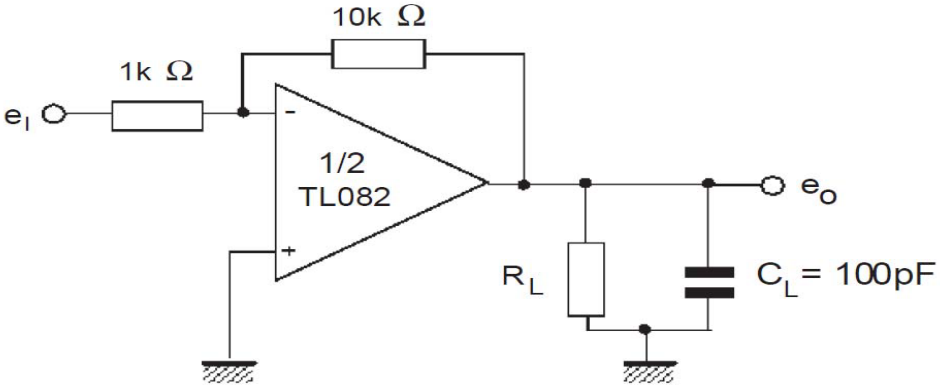

Gain-of- 10 Inverting Amplifier with gain of 10

14.SOP-8 Package Outline Dimensions

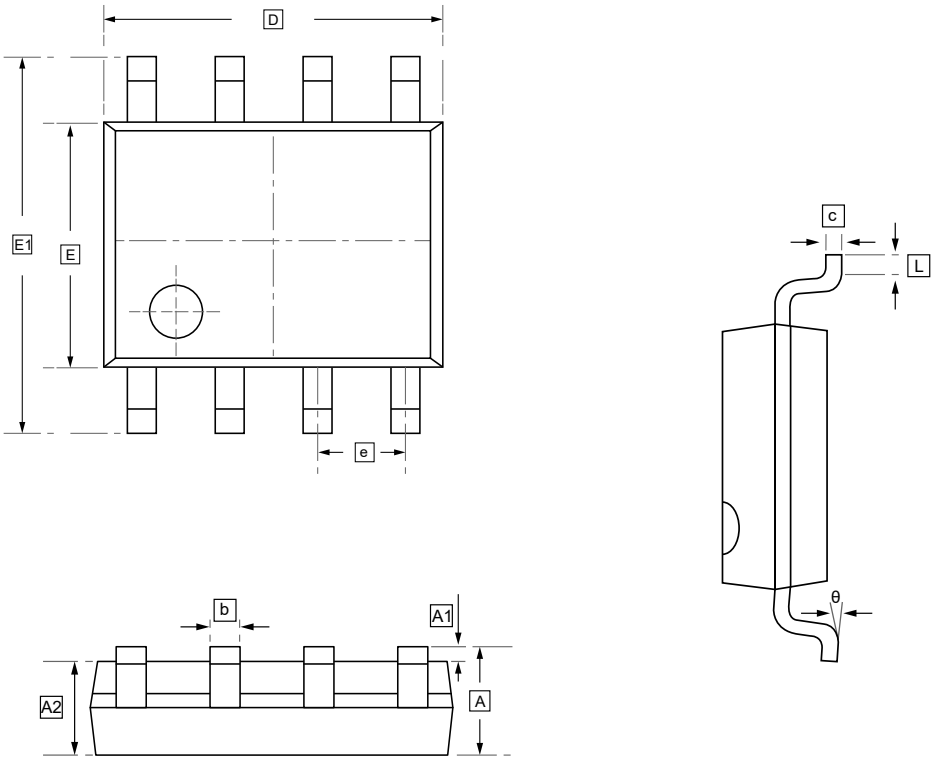

DIMENSIONS (mm are the original dimensions)

Symbol	A	A1	A2	b	c	D	E	E1	e	L	θ
Min	1.350	0.000	1.350	0.330	0.170	4.700	3.800	5.800	1.270	0.400	0°
Max	1.750	0.100	1.550	0.510	0.250	5.100	4.000	6.200	BSC	1.270	8°

15.Ordering Information

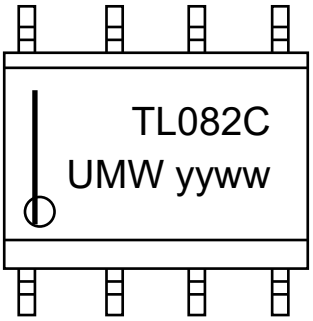

yy: Year Code
ww: Week Code

Order Code	Marking	Package	Base QTY	Delivery Mode
UMW TL082CDR	TL082C	SOP-8	2500	Tape and reel
UMW TL082IDR	TL082I	SOP-8	2500	Tape and reel

16.Disclaimer

UMW reserves the right to make changes to all products, specifications. Customers should obtain the latest version of product documentation and verify the completeness and currency of the information before placing an order.

When applying our products, please do not exceed the maximum rated values, as this may affect the reliability of the entire system. Under certain conditions, any semiconductor product may experience faults or failures. Buyers are responsible for adhering to safety standards and implementing safety measures during system design, prototyping, and manufacturing when using our products to prevent potential failure risks that could lead to personal injury or property damage.

Unless explicitly stated in writing, UMW products are not intended for use in medical, life-saving, or life-sustaining applications, nor for any other applications where product failure could result in personal injury or death. If customers use or sell the product for such applications without explicit authorization, they assume all associated risks.

When reselling, applying, or exporting, please comply with export control laws and regulations of China, the United States, the United Kingdom, the European Union, and other relevant countries, regions, and international organizations.

This document and any actions by UMW do not grant any intellectual property rights, whether express or implied, by estoppel or otherwise. The product names and marks mentioned herein may be trademarks of their respective owners.