UMW TL432xIDBZR

Precision Adjustable Shunt Regulator

1.Description

The UMW TL432xIDBZR is an adjustable three-terminal shunt regulator with excellent thermal stability over operating temperature range. The output voltage can be set to any value between Vref (approximately 2.5V) and 36V through external resistors. It provides a very sensitive turn-on characteristic, which makes it possible to replace Zener diodes in many applications.

2.Features

- Adjustable output voltage: up to 36V
- Low dynamic output impedance: 0.3Ω
- Sink current capability: 1.0~100mA
- Equivalent full-scale temperature coefficient: typ. 50ppm/°C
- Temperature compensation in the rated operating temperature range
- Low output noise
- Fast start-up response

3.Pinning Information

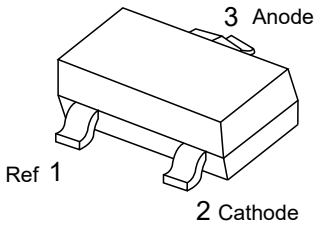

SOT-23

4.Block Diagram

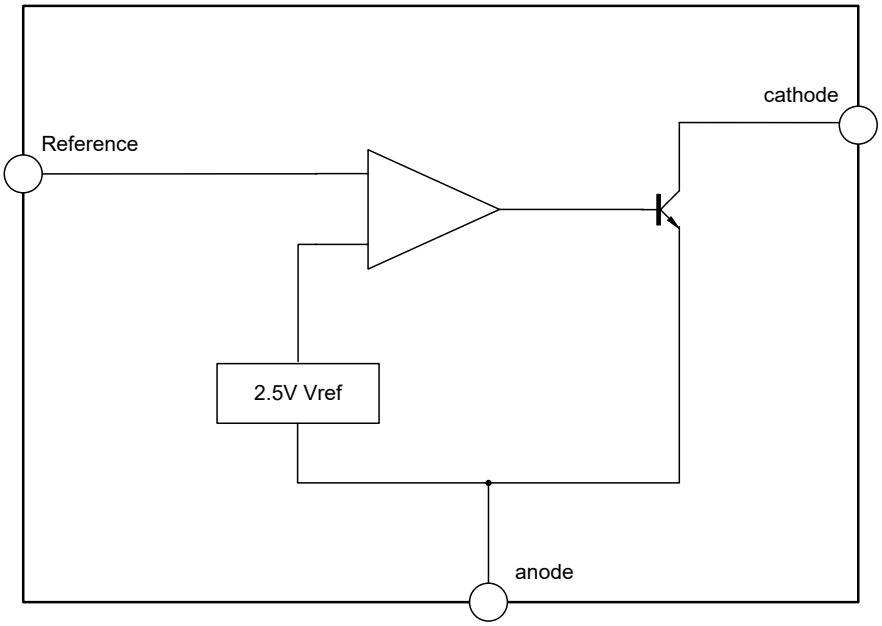

5.Absolute Maximum Ratings

Parameter	Symbol	Ratings		Units
Cathode voltage	V_{KA}	37		V
Cathode current (continuous)	I_{KA}	-100 to 150		mA
Reference input current range	I_{ref}	0.05 to 10		mA
Power dissipation	P_D	SOT-23	290	mW
Storage temperature range	T_{STG}	-65 to 150		°C

6.Recommended Operating Condition

Parameter	Symbol	Min	Typ	Max	Units
Cathode voltage	V_{KA}	V_{REF}		36	V
Cathode current	I_{KA}	1		100	mA
Operating temperature tange	T_{opr}	-40		125	°C

7.Electrical Characteristics (Unless Otherwise Specified, T_a=25°C)

Parameter		Symbol	Conditions		Min	Typ	Max	Units
Reference voltage	TL432BIDBZR	V_{ref}	$V_{KA}=V_{REF}$, I_{KA}=10mA		2.488	2.5	2.512	V
	TL432AIDBZR				2.475	2.5	2.525	V
Deviation of reference input voltage over full temperature range (note 1)		ΔV_{ref}	$V_{KA}=V_{REF}$, I_{KA}=10mA, $T_{MIN}\leq T_A\leq T_{MAX}$			14	34	mV
Ratio of change in reference voltage to the change in cathode voltage		$\Delta V_{ref}/\Delta V_{KA}$	I_{KA}=10mA	ΔV_{KA}=10V~V_{REF}		-1	-2.7	mV/V
				ΔV_{KA}=36V~10V		-0.5	-2	mV/V
Reference input current		I_{ref}	I_{KA}=10mA, R1=10kΩ, R2=∞			1.5	4	μA
Deviation of reference input current over full temperature range		ΔI_{ref}	I_{KA}=10mA, R1=10kΩ, R2=∞ T_A=full Temperature			0.4	1.2	μA
Min. cathode current for regulation		$I_{KA(min)}$	$V_{KA}=V_{REF}$			0.45	1	mA
Off-state cathode current		$I_{KA(OFF)}$	V_{KA}=36V, V_{REF}=0			0.05	1	μA
Dynamic impedance		Z_{KA}	$V_{KA}=V_{REF}$,I_{KA}=1 to 100mA,f≤1.0kHz			0.3	0.5	Ω

Note 1: T_{MIN}=-40°C, T_{MAX}=+125°C.

8.Typical Characteristic

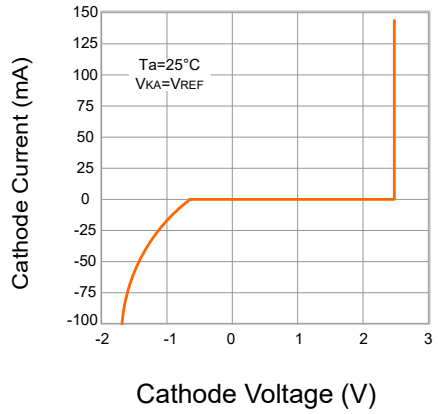

Figure 1: Cathode Current vs. Cathode Voltage

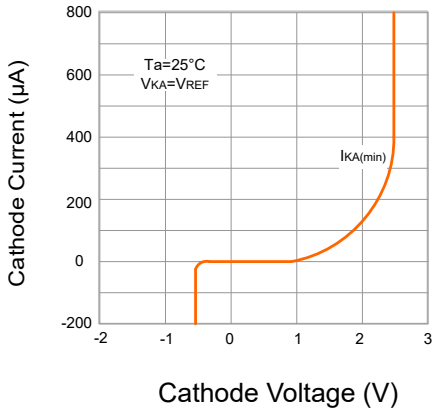

Figure 2: Cathode Current vs.Cathode Voltage

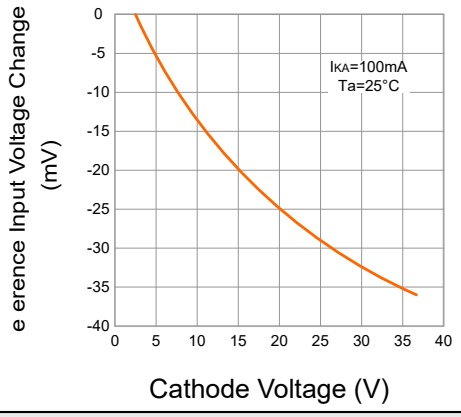

Figure 3: Reference Input voltage Change vs. Cathode Voltage

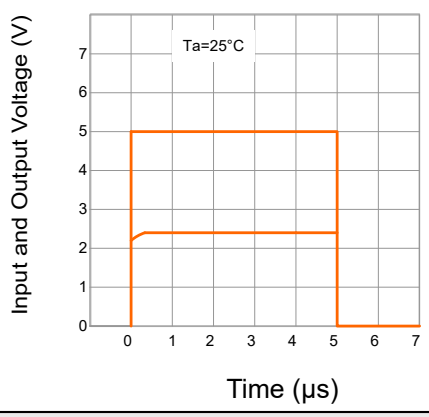

Figure 4: Pulse Response

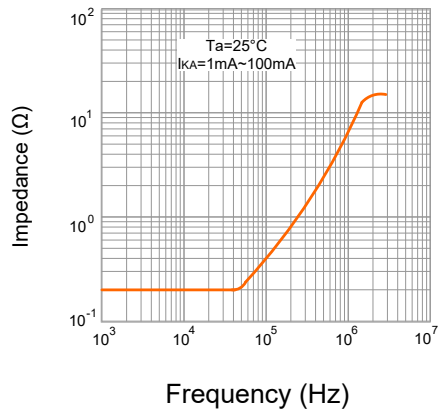

Figure 5: Dynamic Impedance vs. Frequency

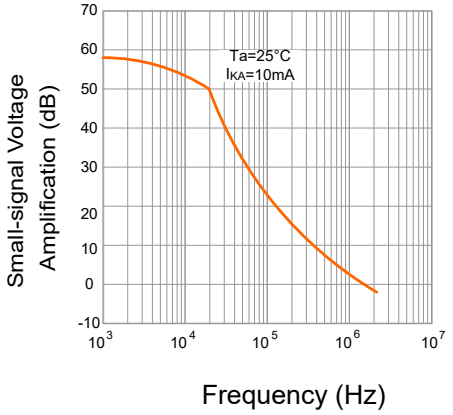

Figure 6: Small-signal Voltage Amplification vs. Frequency

9.Test Circuits

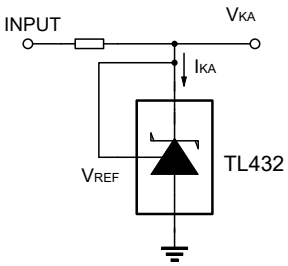

Test Circuit for $V_{KA}=V_{REF}$

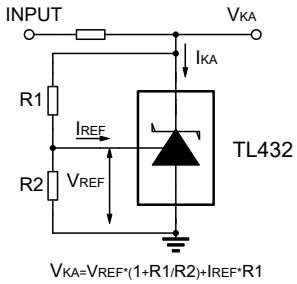

Test Circuit for $V_{KA}\geq V_{REF}$

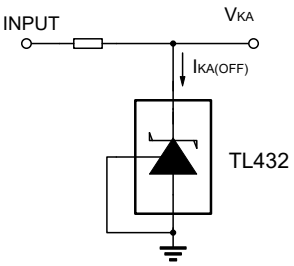

Test Circuit for $I_{KA(OFF)}$

10.Typical Application Circuit

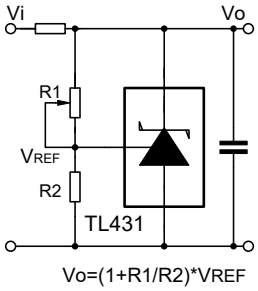

Shunt Regulator

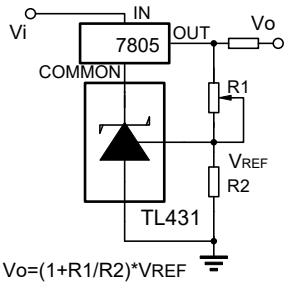

Three-terminal Fixed
Regulator Output Control

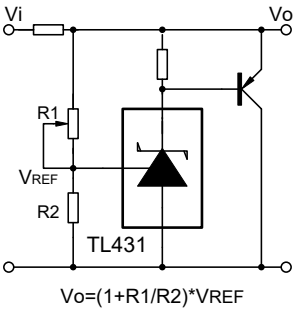

High-current Shunt Regulator

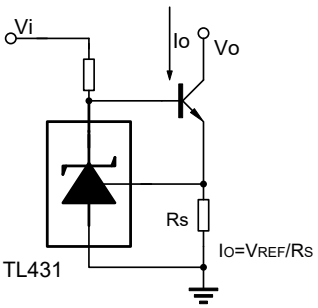

Constant Current Source

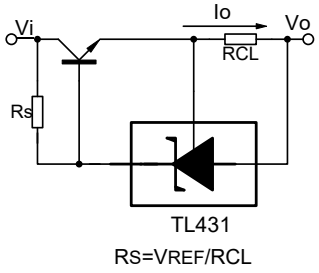

Current Limiter or Current Source

11.SOT-23 Package Outline Dimensions

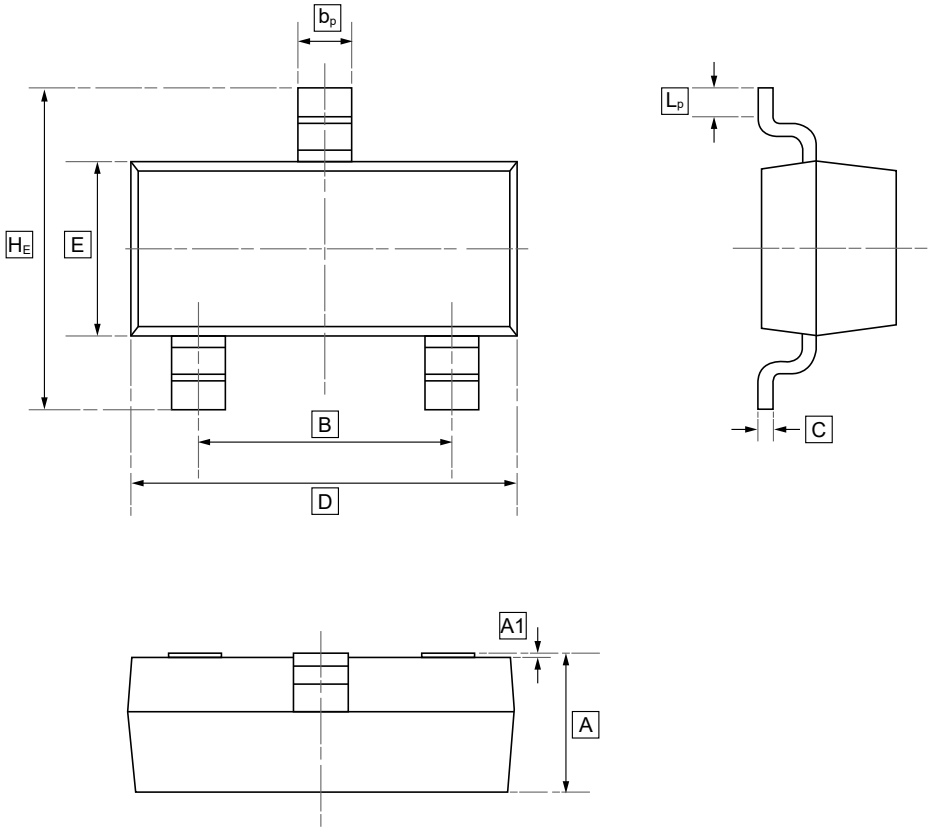

DIMENSIONS (mm are the original dimensions)

Symbol	A	B	b_p	C	D	E	H_E	A1	L_p
Min	0.95	1.78	0.35	0.08	2.70	1.20	2.20	0.013	0.20
Max	1.40	2.04	0.50	0.19	3.10	1.65	3.00	0.100	0.50

12.Ordering information

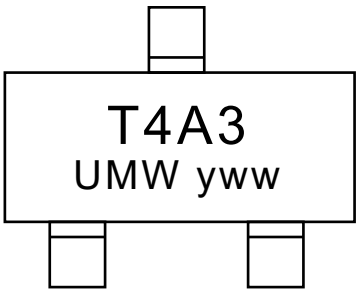

yww: Batch Code

Order Code	Marking	Package	Base QTY	Accuracy	Delivery Mode
UMW TL432AIDBZR	TA43	SOT-23	3000	1%	Tape and reel
UMW TL432BIDBZR	T4FG	SOT-23	3000	0.5%	Tape and reel

13.Disclaimer

UMW reserves the right to make changes to all products, specifications. Customers should obtain the latest version of product documentation and verify the completeness and currency of the information before placing an order.

When applying our products, please do not exceed the maximum rated values, as this may affect the reliability of the entire system. Under certain conditions, any semiconductor product may experience faults or failures. Buyers are responsible for adhering to safety standards and implementing safety measures during system design, prototyping, and manufacturing when using our products to prevent potential failure risks that could lead to personal injury or property damage.

Unless explicitly stated in writing, UMW products are not intended for use in medical, life-saving, or life-sustaining applications, nor for any other applications where product failure could result in personal injury or death. If customers use or sell the product for such applications without explicit authorization, they assume all associated risks.

When reselling, applying, or exporting, please comply with export control laws and regulations of China, the United States, the United Kingdom, the European Union, and other relevant countries, regions, and international organizations.

This document and any actions by UMW do not grant any intellectual property rights, whether express or implied, by estoppel or otherwise. The product names and marks mentioned herein may be trademarks of their respective owners.