1.Description

The TMP175 is a high-accuracy, low-power, NTC/ PTC thermistor replacement digital temperature sensor for temperature measurement in commu-nications,computer,consumer,environmental, industrial, and instrumentation applications.The TMP175 provides ≤ ±0.5°C temperature accuracy over the normal operating range of -40°C to +125°C with good temperature linearity.

The rated operating voltage range of the TMP175 is 1.4V ~ 5.5V, and the quiescent current in actual temperature conversion is less than 40μA. The on-chip analog-to-digital converter (ADC) provides a temperature resolution of 0.0625°C.

The TMP175 is available in an LM75-compatible 8-Pin MSOP / SOP package that supports SMBus and I²C interfaces. Up to 27 TMP175 device addresses or 8 TMP175 device addresses can be mounted on one bus. The TMP175 provides SMBus Alert function.

2.Features

- Operating temperature range：-55°C ~ +125°C
- Temperature accuracy: ±0.5°C (-40°C ~ +125°C)
- Supply voltage range: 1.4V ~ 5.5V
- Low quiescent current:
  Temperature conversion: 40μA
  Shutdown mode: 0.3μA
- Resolution: 9~12 bits (user defined)
- Digital output:
  SMBus TM, I²C interface compatibility

3.Applications

- Power-supply temperature monitoring
- Computer peripheral thermal protection
- Laptop computers
- Cell phones
- Battery management
- Office machines
- Thermostat controls
- Electro mechanical device temperature

4.The TMP175 Family Internal Block Diagram

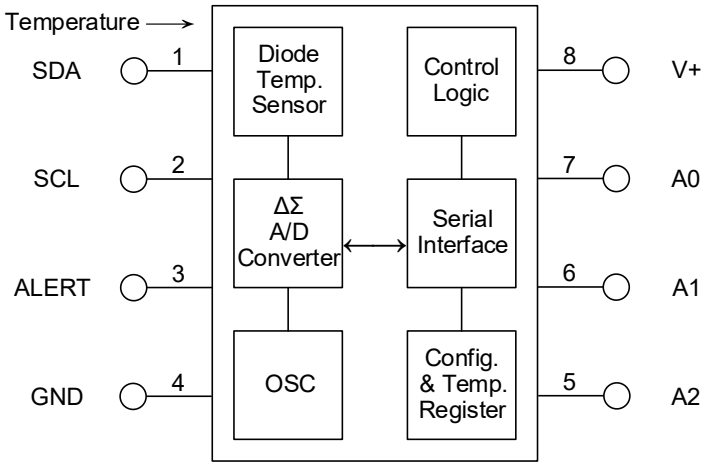

TMP175

5.Pin Configuration and Functions

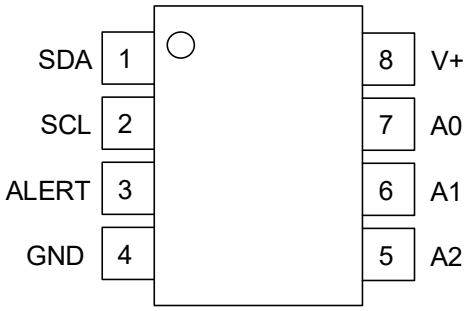

MSOP-8/SOP-8

Pin Functions

Pin		Description
NO.	Name	
1	SDA	Serial data input. Open-drain output, requires a pull-up resistor
2	SCL	Serial clock. Open-drain output, requires a pull-up resistor
3	ALERT	Over-temperature alert. Open-drain output, requires a pull-up resistor
4	GND	Ground
5	A2	Address select Connect to GND, V+, or floating (Floating is only available for TMP175)
6	A1	
7	A0	
8	V+	Supply voltage, -1.4V~ 5.5V

6.Absolute Maximum Ratings

Parameter	Min	Max	Unit
Supply Voltage, V+		6	V
SCL、SDA、A2、A1、A0 Pin Voltage	-0.5	6	V
ALERT Pin Voltage	-0.5	((V+)+0.3) and ≤5.5	V
Operating Temperature	-55	128	°C
Junction Temperature		150	°C
Storage Temperature	-60	150	°C

Over operating free-air temperature range (unless otherwise noted). Stresses beyond those listed under Absolute Maximum Ratings may cause permanent damage to the device.

7.ESD Ratings

Parameter		Value	Unit
Electrostatic discharge, V_{ESD}	Human Body Mode (HBM), per ANSI/ESDA/JEDEC JS-001	±5000	V
	Machine Mode (MM), per JEDEC-STD Classification	300	V

8.Recommended Operating Conditions

Parameter	Symbol	Min	Nom	Max	Unit
Supply voltage	V+	1.4	3.3	5.5	V
Operating temperature range	T_A	-40		125	°C

Over operating free-air temperature range (unless otherwise noted).

9.Electrical Characteristics

Electrical characteristics at T_A=-40°C~ +25°C and V+=1.4V ~ 5.5V (unless otherwise noted); TYP is the characteristic of the device at T_A=27°C and V+=3.3V.

Parameter	Conditions	Min	Typ	Max	Units
Operating Temperature Range		-40		125	°C
Accuracy (Temperature Error)	+25°C, V+=3.3V		±0.1	±0.5	°C
	-25°C to +85°C		±0.3	±0.5	°C
	-40°C to +125°C		±0.5	±1	°C
Supply Voltage Sensitivity	-40°C to +125°C		±0.0625	±0.25	°C/V
Resolution	User defined	0.0625		0.5	°C
		9		12	Bits
Conversion Time	R1=0, R0=0; 9bits		27.5	37.5	ms
	R1=0, R0=1; 10bits		55	75	ms
	R1=0, R0=0; 11bits		110	150	ms
	R1=1, R0=1; 12bits		220	300	ms
Single ADC Conversion Time	See section 6.1.1.		26		ms
Communication Frequency	Fast mode	0.001		0.4	MHz
	High-speed mode	0.001		2.75	MHz
Power Supply Voltage		1.4	3.3	5.5	V
Average Quiescent Current, I_Q	Serial bus inactive, R1=0,R0=0(default)		40	85	μA
	Serial bus active, SCL freq=400 kHz		100		μA
	Serial bus active, SCL freq=2.75 MHz		410		μA
Shutdown Current, I_{SD}	Serial bus inactive		0.3	1	μA
	Serial bus active, SCL freq=400 kHz		60		μA
	Serial bus active, SCL freq=2.75 MHz		380		μA

10.Detailed Description

Device Functional Modes

Continuous Conversion Mode

The default mode of the TMP175 is continuous conversion mode.During this mode,the ADC performs continuous temperature conversions and stores each results to the temperature register,overwriting the result from the previous conversion. The R1 and R0 bits in the configuration register can configure the temperature measurement resolution of the TMP175 to 9bits, 10bits, 11bits or 12bits, see Table 9 for details.

When the TMP175 is configured with different temperature measurement resolutions, the single conversion time is different, but the actual working time of the ADC in a single conversion is the same, both are 26ms (typical value); the device will enter low-power idle during the remaining conversion time. During the actual working time of the ADC, the quiescent current of the TMP175 is 40μA (typical value); during the low power idle time, the quiescent current of the TMP175 is 3μA (typical value). The above process is shown in Figure 1.

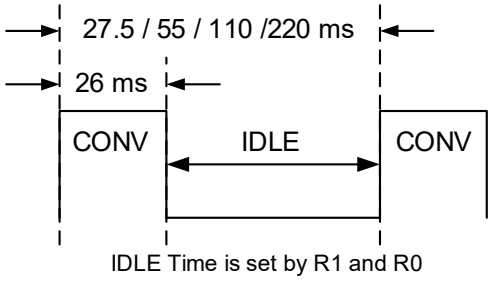

Figure 1. Continuous Conversion Diagram

The temperature measurement range of TMP175 in normal temperature measurement mode is -40°C ~ +125°C. The data format (12bits) of the temperature measurement results is listed in Table 1, where 1LSB = 0.0625°C, and negative numbers are expressed in two's complement. When powered on or reset, the temperature register of the TMP175 will be set to 00h until the next temperature conversion is complete. Unused bits in the temperature register always read as 0 (not shown in the table below)

Table 1. TMP175 12-Bits Temperature Data Format

Temperature (°C)	Digital Output (Binary)	Digital Output (Hex)
128	0111 1111 1111	7FF
127.9375	0111 1111 1111	7FF
100	0110 0100 0000	640
80	0101 0000 0000	500
75	0100 1011 0000	4B0
50	0011 0010 0000	320
25	0001 1001 0000	190
0.25	0000 0000 0100	004
0	0000 0000 0000	000
-25	1110 0111 0000	E70
-55	1100 1001 0000	C90

Shutdown Mode

The shutdown mode of the TMP175 devices lets the user save maximum power by shutting down all device circuitry other than the serial interface, which reduces current consumption to typically less than 0.3μA (typical value). Shutdown mode is enabled when the SD bit is 1; the device shuts down when the current conversion is completed. When SD is equal to 0, the TMP175 maintains a continuous conversion state.

One-Shot Mod

The TMP175 feature a one-shot temperature measurement mode. When the TMP175 is in shutdown mode, writing 1 to the OS bit starts a single temperature conversion. The device returns to the shutdown state at the completion of the single conversion. This feature is useful to reduce power consumption in the TMP175 when continuous temperature monitoring is not required. When the configuration register is read, the OS always reads 0.

When using the single conversion mode, no matter how the temperature measurement resolution bits R1 and R0 of the TMP175 are configured, the single conversion time is 26ms (typical value), so a higher rate temperature measurement can be achieved through this mode

ALERT

The TMP175 has a temperature alarm function, by writing the TM bit in the configuration register as 0 or 1, the TMP175 can be configured as comparator mode or interrupt mode to achieve different alarm functions.

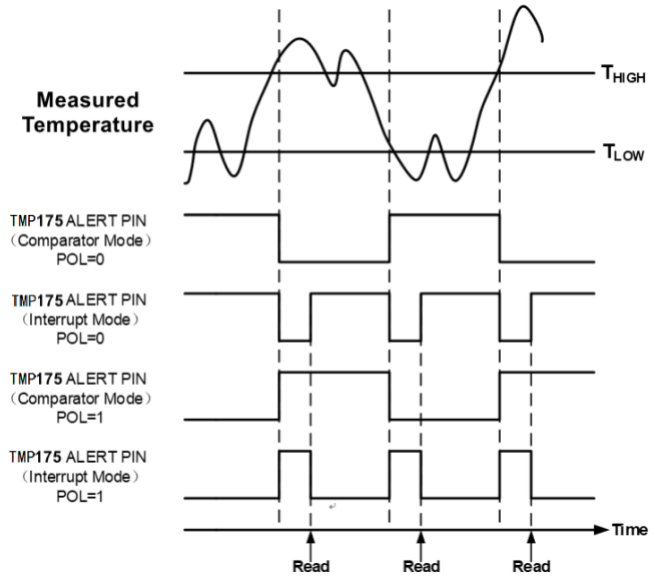

Figure 2. Status of the ALERT Pin in Different Modes

In comparator mode (TM = 0), when the number of times the temperature measurement result continuously equals or exceeds the temperature upper limit register value THIGH reaches the value defined by the F1/F0 bits in the configuration register (as shown in Table 9), the ALERT pin will be activated. The ALERT pin will remain active until the number of times the temperature measurement result is continuously lower than the temperature lower limit register value T_{LOW} reaches the value defined by F1/F0.

In interrupt mode (TM=1), the ALERT pin will be activated when the temperature measurement result equals or exceeds T_{HIGH} continuously for a number of times to the value defined by F1/F0 (as shown in Table 9). The ALERT pin remains active until it is cleared by one of three events: a read of any register, a successful SMBus alert response, or a shutdown command. After the ALERT pin is cleared, the device starts to compare temperature readings with the T_{LOW}. The ALERT pin becomes active again only when the temperature drops below T_{LOW} for a consecutive number of conversions as set by F1/F0 bits. The ALERT pin remains active until cleared by any of the same three clearing events. The user can also reset the TMP175 to clear the ALERT pin state by using the global response reset command (General Call). This operation also resets other internal registers in the TMP175 and returns the device to compare mode (TM=0). Table 9 shows the specific configuration of the F1/F0 bits. For the TMP175, changing the ALERT mode clears the active ALERT pin.

The polarity bit (POL) in the configuration register allows the user to adjust the polarity of the ALERT pin output. If the POL bit is set to 0 (default), the ALERT pin becomes active low. When POL bit is set to 1, the ALERT pin becomes active high. The above situations are shown in Figure 2.

11.Serial Interface

Bus Overview

The TMP175 is compatible with SMBus and I2C interfaces. In the SUMBus protocol, the device that initiates the transfer is called a master, and the devices controlled by the master are slaves. The bus must be controlled by a master device that generates the serial clock (SCL), controls the bus access, and generates the START and STOP conditions. To address a specific device, a START condition is initiated, indicated by pulling the data line (SDA) from a high- to low-logic level when the SCL pin is high. All slaves on the bus receive the 8-bits slave address on the rising edge of the clock, and the last bit indicates whether a read or write operation is intended. During the ninth clock pulse, the addressed slave generates an acknowledge and pulls the SDA pin low to respond to the master. A data transfer is then initiated and sent over eight clock pulses followed by an acknowledge bit. When all data are transferred, the master generate a STOP signal to end the communication by pulling SDA from low to high when SCL is high.

During the data transfer, the SDA pin must remain stable when the SCL pin is high because any change in the SDA pin when the SCL pin is high is interpreted as a START or STOP signal.

Serial Bus Address

To communicate with the TMP175, the master must first address slave devices through an address byte. The slave address byte consists of seven address bits, and a direction bit indicating the intent of executing a read or write operation. The TMP175 features three address pins, of which the TMP175 can generate up to 27 different slave addresses, the TMP175 can generate up to 8 different slave addresses. This allows the host to address up to 27/8 TMP175 / TMP75 devices with different addresses on a single bus, respectively. Table 2 and Table 3 respectively give the connection mode of the address pins corresponding to each slave address in TMP175. ‘1’ indicates the pin is connected to the supply (VCC); ‘0’ indicates the pin is connected to GND; ‘Float’ indicates the pin is left unconnected. The setting of the address pin connection method is recommended to be completed before the device is powered on, and the hot swap of the address pin should be avoided; if the address pin connection mode is changed during the device operation, the device must be powered on again or sent Global Call command, so that the device updates the slave address.

Table 2. Address Pins and Slave Addresses for the TMP175

A2	A1	A0	Slave Address	A2	A1	A0	Slave Address
0	0	0	1001000	0	Float	0	0101000
0	0	1	1001001	0	Float	1	0101001
0	1	0	1001010	1	Float	0	0101010
0	1	1	1001011	1	Float	1	0101011
1	0	0	1001100	0	0	Float	0101100
1	0	1	1001101	0	1	Float	0101101
1	1	0	1001110	1	0	Float	0101110
1	1	1	1001111	1	1	Float	0101111
Float	0	0	1110000	0	Float	Float	0110101
Float	0	Float	1110001	1	Float	Float	0110110
Float	0	1	1110010	Float	Float	Float	0110111
Float	1	0	1110011				
Float	1	Float	1110100				
Float	1	1	1110101				
Float	Float	0	1110110				
Float	Float	1	1110111				

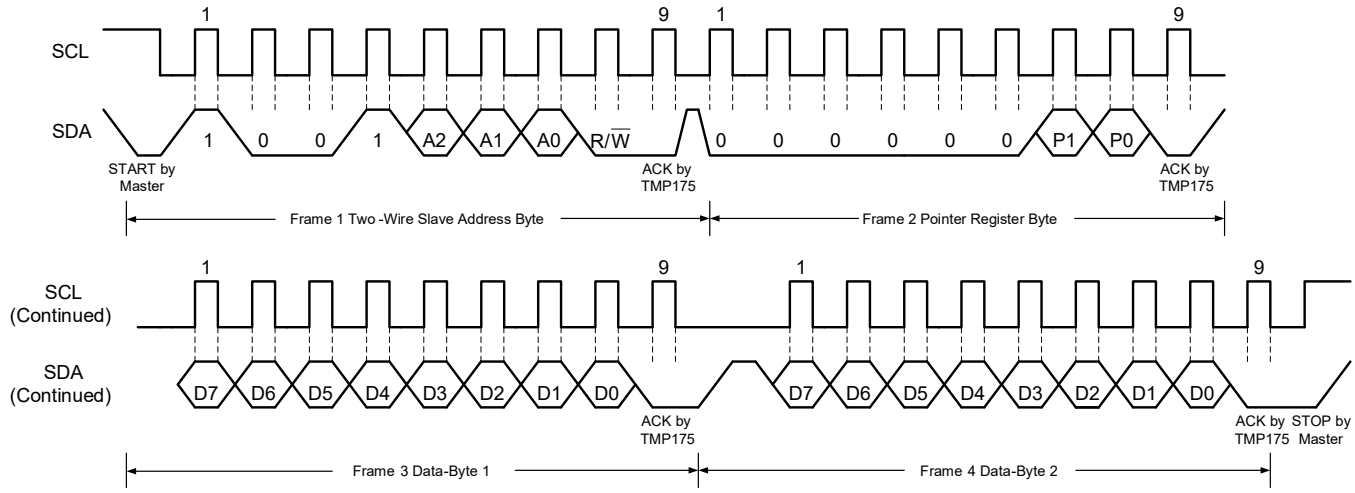

Figure 3. Two-wire Write Command Timing Diagram

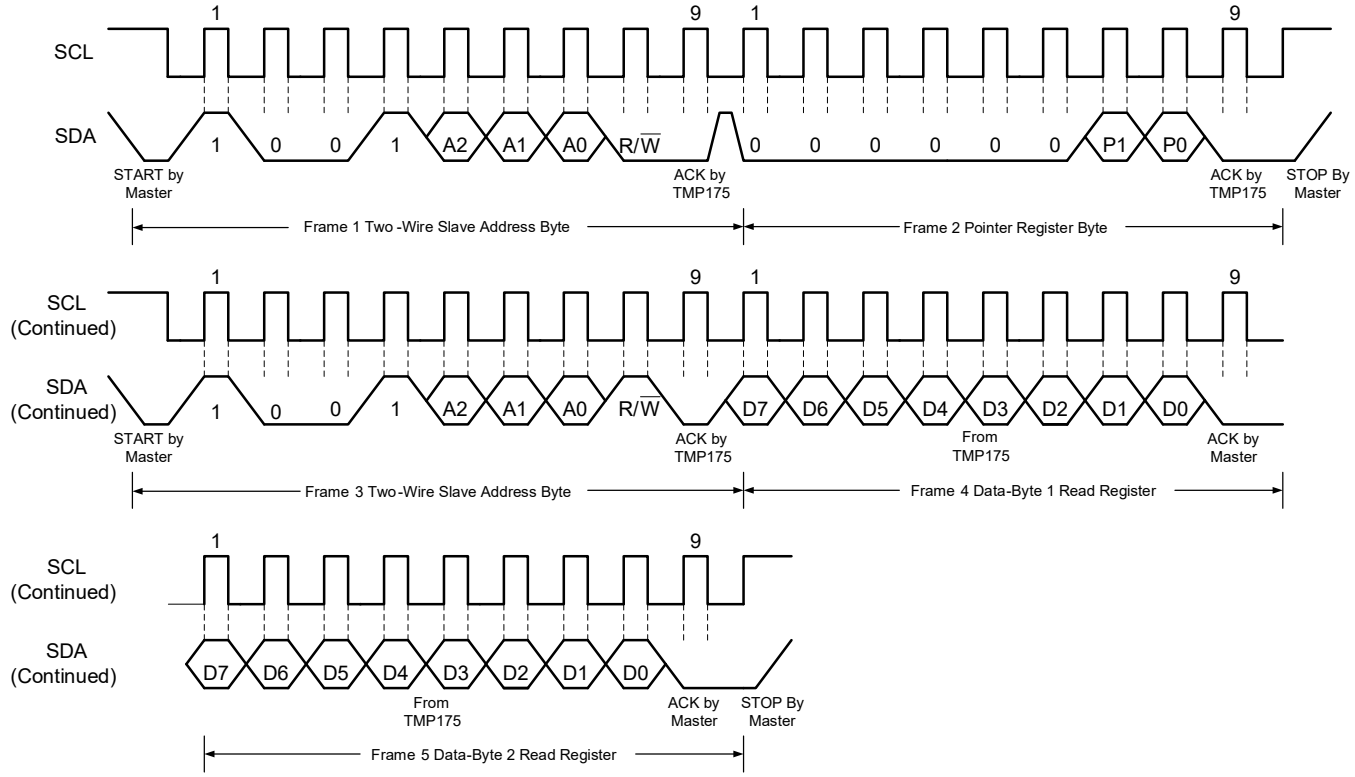

Figure 4. Two-wire Read Command Timing Diagram

When writing data to the TMP175, after the slave address byte is sent, accessing a particular register on the TMP175 is accomplished by writing the appropriate value to the pointer register. Every write operation to the TMP175 requires a value for the pointer register.

When reading from the TMP175 device, after the slave address byte is sent, the corresponding pointer register byte also needs to be sent. Unlike the write operation, if the user need to repeatedly read data from the same register, it is not required to send the pointer register byte separately each time, the last value stored in the pointer register will be read by the device automatically; to change the register pointer for a read operation, a new value must be written to the pointer register. The action is accomplished by issuing a slave-address byte with the R/W bit low, followed by the pointer register byte. The master can then generate a START condition and send the slave address byte with the R/W bit high to initiate the read command.

It should be noticed that register bytes are sent with the MSB first, followed by the LSB. Figure 3 and Figure 4 show schematic diagrams of the above read and write operations

SMBus Alert Function

The TMP175 supports the SMBus alert function. When the TMP175 operates in interrupt mode (TM=1), the master can send SMBus ALERT command (19h) to the bus.If the ALERT pin is active, the device acknowledges the SMBus ALERT command and responds by returning the slave address. The eighth bit (LSB) of the slave address byte indicates if the alert condition is caused by the temperature exceeding T_{HIGH} or falling below T_{LOW}. This bit is equal to POL if the temperature is greater than or equal to T_{HIGH}; this bit is equal to POL if the temperature is less than T_{LOW}.

If multiple devices on the bus respond to the SMBus ALERT command, the bus will return the lowest two-wire address. The TMP175 ALERT pin becomes inactive at the completion of the SMBus ALERT command; the ALERT pin of the TMP175 that does not return an address will remain active. Sending the SMBus ALERT command again can continue to clear the ALERT pin of the TMP175 with the current lowest address. The above process is detailed in Figure 5.

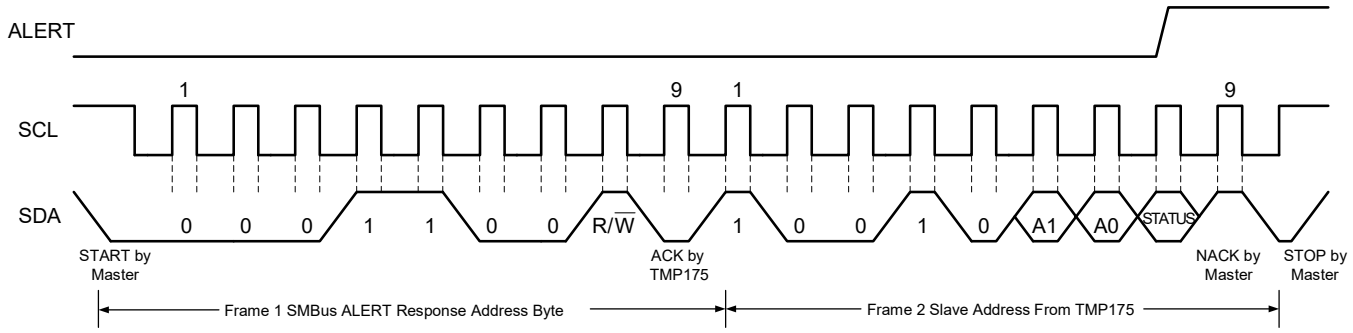

Figure 5. SMBus Alert Timing Diagram

General Call Reset

The TMP175 responds to the two-wire general call address 00h. The device acknowledges the general call address and responds to commands in the second byte. If the second byte is 06h, the TMP175 resets the internal registers to the power-up reset values, and aborts the current temperature conversion. If the second byte is other value, the TMP175 will not respond.

High-Speed Mode

For the two-wire bus to operate at frequencies above 400kHz, the host device must issue a High-Speed mode host code (0000 1xxxb) as the first byte after a START condition to switch the bus to high-speed operation. The TMP175 device does not acknowledge this byte, but it does switch the input filters on the SDA and SCL and the output filters on the SDA to operate in High-Speed mode, allowing the bus to transmit data at frequencies up to 2.75MHz. After the High-Speed mode host code is issued, the host transmits a two-wire device address to initiate a data transfer operation. The bus continues to operate in High-Speed mode until a STOP condition occurs on the bus. Upon receiving the STOP condition, the TMP175 switches the input and output filters back to fast-mode operation.

Time-Out Function

The TMP175 resets the serial interface if SCL is held low for 30ms (typical value) between a START and STOP condition, the TMP175 releases the SDA bus and waits for a START condition. To avoid activating the Time-Out function, a communication speed of at least 1kHz must be maintained.

12.Register Descriptions

Pointer Register

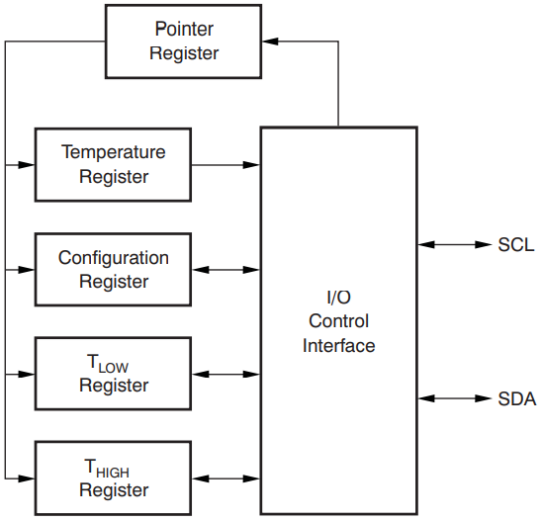

Figure 6. Internal Register Structure

Figure 6 shows the internal register structure of the TMP175 device. The 8-bit Pointer Register of the device is used to address a given data register. The Pointer Register uses the two LSBs (see Table 4) to identify which of the data registers must respond to a read or write command. The power-up reset value of P1/P0 is '00'. By default, the TMP175 reads the temperature on power-up.

Table 4 lists the pointer address of the registers available in the TMP175 device. During a write command, bytes P2 through P7 must always be 0.

Table 3. Pointer Address

P1	P0	Register
0	0	Temperature Register (Read Only)
0	1	Configuration Register (Read/Write)
1	0	T_{LOW} Register (Read/Write)
1	1	T_{HIGH} Register (Read/Write)

Table 4. Pointer Register Byte

P7	P6	P5	P4	P3	P2	P1	P0
0	0	0	0	0	0	Register Bits	

Temperature Register

The Temperature Register of the TMP175 device is configured as a 12-bit read-only register that stores the output of the most recent conversion. Two bytes must be read to obtain data and are listed in Table 5. Byte 1 is the most significant byte (MSB), followed by byte 2, the least significant byte (LSB). The T11~T0 bits are used to indicate temperature. Byte 2 does not have to be read if that information is not needed. The power-on default value of the temperature register is 0°C.

Table 5. Byte 1 and Byte 2 of Temperature Register

Byte	D7	D6	D5	D4	D3	D2	D1	D0
1	T11	T10	T9	T8	T7	T6	T5	T4
2	T3	T2	T1	T0	0	0	0	0

Temperature Limit Register

The temperature limits are stored in the T_{HIGH} and T_{LOW} registers in the same format as the temperature result. Table 6 and Table 7 list the format for the T_{HIGH} and T_{LOW} registers. The power-up reset values for T_{HIGH} and T_{LOW} are:

$$T_{HIGH}=+80°C,\ T_{LOW}=+75°C$$

For different temperature measurement resolutions, when the Temperature Limit Register is applied to the temperature alarm function, the H2~H0 and L2~L0 bits are involved in the temperature comparison.

Table 6. Byte 1 and Byte 2 in T_{HIGH} Register

Byte	D7	D6	D5	D4	D3	D2	D1	D0
1	H11	H10	H9	H8	H7	H6	H5	H4
2	H3	H2	H1	H0	0	0	0	0

Table 7. Byte 1 and Byte 2 in T_{LOW} Register

Byte	D7	D6	D5	D4	D3	D2	D1	D0
1	L11	L10	L9	L8	L7	L6	L5	L4
2	L3	L2	L1	L0	0	0	0	0

Configuration Register

The Configuration Register is an 8-bit read/write register used to store bits that control the operational modes of the temperature sensor. Read/write operations are performed MSB first. Table 8 list the format and power-up and reset values of the configuration register.

Table 8. Configuration Register Format

Bit	Field	Default	Description
7	OS(R)	0	**One-shot conversion mode** Writing 1, starts a single temperature conversion. Read returns 0.
6	R1(R/W)	0	**Temperature measurement resolution flag bit** 00=9bits，27.5ms/Conv 01=10bits，55ms/Conv 10=11bits，110ms/Conv 11=12bits，220ms/Conv
5	R0(R/W)	0	
4	F1(R/W)	0	**Flag bit for the number of over-temperature required to activate the ALERT pin** 00=1 time 01=2 times 10=4 times (TMP175), 3 times (TMP75) 11=6 times (TMP175), 4 times (TMP75)
3	F0(R/W)	0	
2	POL(R/W)	0	ALERT pin polarity flag
			1 = ALERT pin is high when activated 0 = ALERT pin is low when activated

Bit	Field	Default	Description
1	TM(R/W)	0	Device working mode flag bit under ALERT function 1 = Interrupt mode 0 = Comparator mode
0	SD(R/W)	0	Shutdown mode flag 1 = Shutdown mode 0 = Continuous conversion mode

Application and Implementation

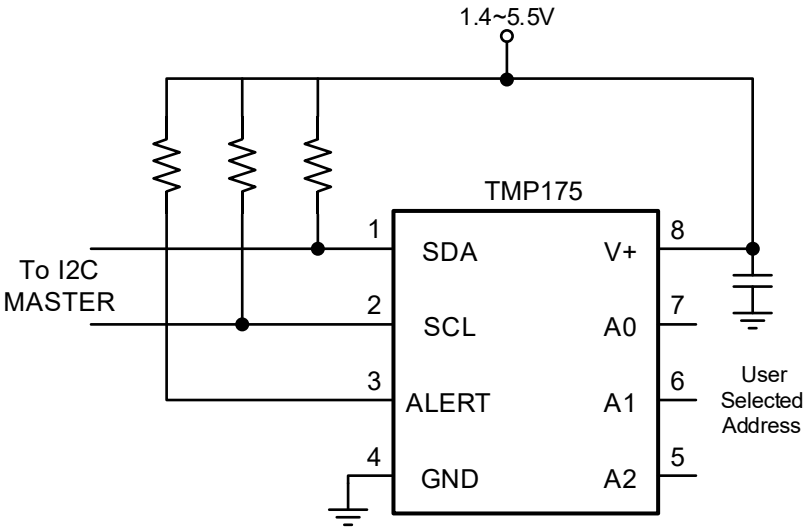

Figure 7. Typical Connections of the TMP175

The TMP175 device requires pull-up resistors on the SCL, SDA, and ALERT pins, as shown in Figure 7, the recommended value for the pull-up resistors is 5kΩ. In some applications the pull-up resistor can be lower or higher than 5kΩ but must not exceed 3mA of current on any of those pins.

The TMP175 device is a very low-power device and generates very low noise on the supply bus. Applying an RC filter to the V+ pin of the TMP175 device can further reduce any noise that the device might propagate to other components. RF in Figure 7 must be less than 5kΩ and CF must be greater than 10nF.

Place the device in close proximity to the heat source that must be monitored, with a proper layout for good thermal coupling. This placement ensures that temperature changes are captured within the shortest possible time interval. To maintain accuracy in applications that require air or surface temperature measurement, take care to isolate the package and leads from ambient air temperature. A thermally-conductive adhesive is helpful in achieving accurate surface temperature measurement.

13.1 MSOP-8 Package Outline Dimensions

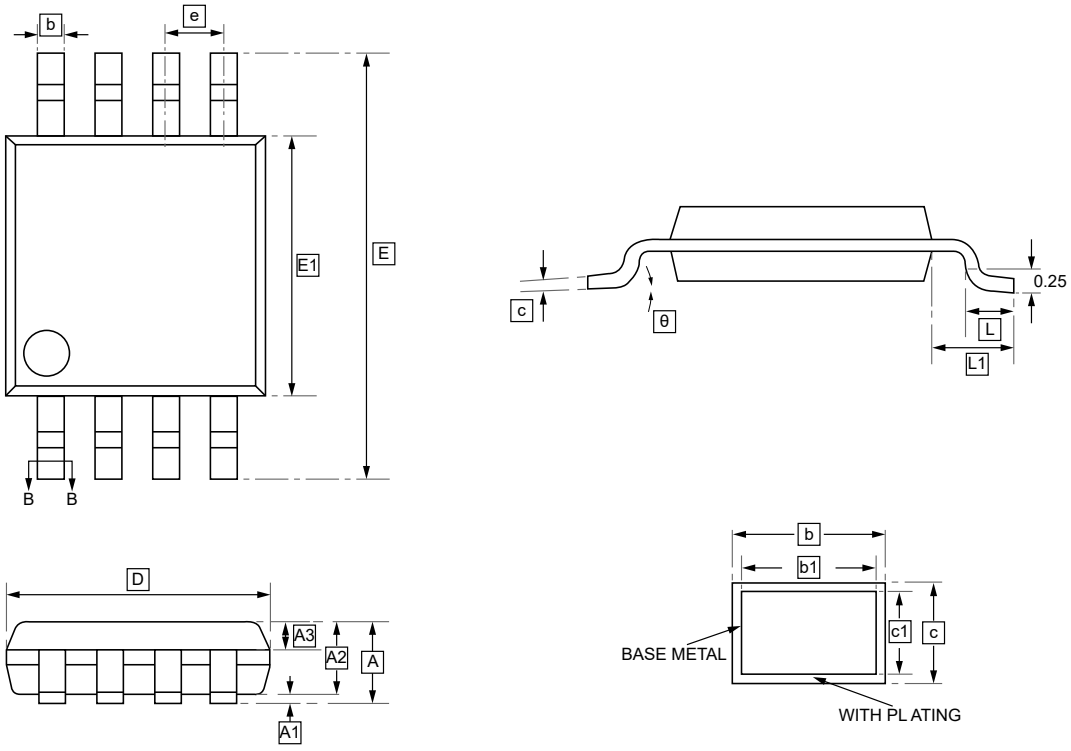

DIMENSIONS (mm are the original dimensions)

Symbol	A	A1	A2	A3	b	b1	c	c1	D	E	E1	e
Min	-	0.05	0.75	0.30	0.28	0.27	0.15	0.14	2.90	4.70	2.90	0.65
Max	1.10	0.15	0.95	0.40	0.36	0.33	0.19	0.16	3.10	5.10	3.10	BSC

Symbol	L	L1	θ
Min	0.40	0.95	0°
Max	0.70	REF	8°

13.2 SOP-8 Package Outline Dimensions

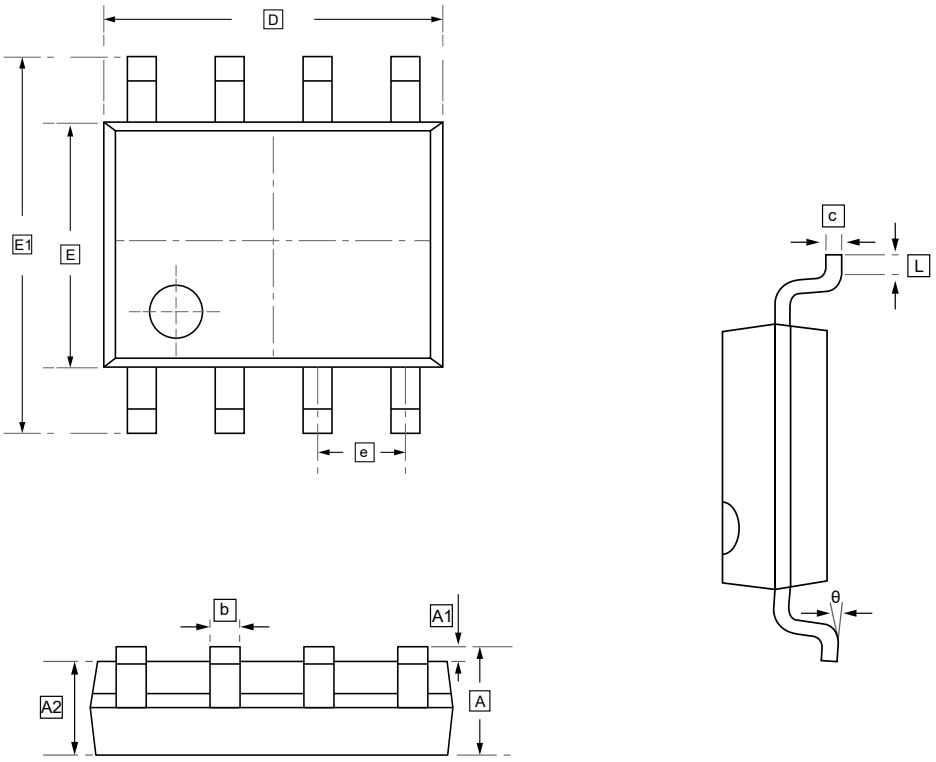

DIMENSIONS (mm are the original dimensions)

Symbol	A	A1	A2	b	c	D	E	E1	e	L	θ
Min	1.350	0.000	1.350	0.330	0.170	4.700	3.800	5.800	1.270	0.400	0°
Max	1.750	0.100	1.550	0.510	0.250	5.100	4.000	6.200	BSC	1.270	8°

14.Ordering Information

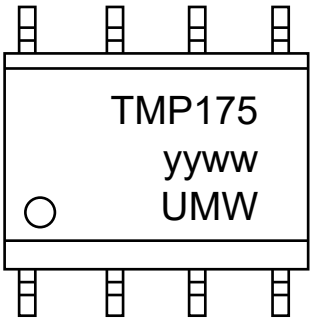

yy: Year Code
ww: Week Code

Order Code	Marking	Package	Base QTY	Delivery Mode
UMW TMP175AIDR	TMP175	SOP-8	4000	Tape and reel
UMW TMP75AIDGKR	TMP175	MSOP-8	4000	Tape and reel

15.Disclaimer

UMW reserves the right to make changes to all products, specifications. Customers should obtain the latest version of product documentation and verify the completeness and currency of the information before placing an order.

When applying our products, please do not exceed the maximum rated values, as this may affect the reliability of the entire system. Under certain conditions, any semiconductor product may experience faults or failures. Buyers are responsible for adhering to safety standards and implementing safety measures during system design, prototyping, and manufacturing when using our products to prevent potential failure risks that could lead to personal injury or property damage.

Unless explicitly stated in writing, UMW products are not intended for use in medical, life-saving, or life-sustaining applications, nor for any other applications where product failure could result in personal injury or death. If customers use or sell the product for such applications without explicit authorization, they assume all associated risks.

When reselling, applying, or exporting, please comply with export control laws and regulations of China, the United States, the United Kingdom, the European Union, and other relevant countries, regions, and international organizations.

This document and any actions by UMW do not grant any intellectual property rights, whether express or implied, by estoppel or otherwise. The product names and marks mentioned herein may be trademarks of their respective owners.