# UMW TSV6292/6294

Micropower, wide bandwidth CMOS operational amplifiers

## 1.Description

The UMW TSV6292, TSV6294 dual and quad operational amplifiers offer a high bandwidth of 1.3 MHz while consuming only 29 µA. They must be used in a gain configuration (equal or above +4 or -3). The UMW TSV6292, TSV6294 features low voltage, low power operation and rail-to-rail input and output. The devices also offer an ultra-low input bias current and low input offset voltage. These features make the TSV6292, TSV6294 family ideal for sensor interfaces, battery supplied and portable applications, as well as active filtering.

## 2.Features

- Rail-to-rail input and output
- Low power consumption: 29µA typ, 36µA max
- Low supply voltage: 1.5 – 5.5V
- High gain bandwidth product: 1.3 MHz typ
- Stable when used in gain configuration
- Low power shutdown mode: 5 nA typ
- Good accuracy: 800 µV max (A version)
- Low input bias current: 1 pA typ
- EMI hardened operational amplifiers
- High tolerance to ESD: 4 kV HBM
- Extended temperature range: -40 to +125°C

## 3.Applications

- Battery-powered applications
- Portable devices
- Signal conditioning
- Active filtering
- Medical instrumentation

## 4.Pinning information

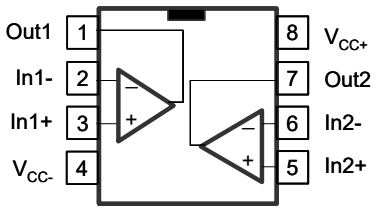


**TSV6292**
**SOP-8**

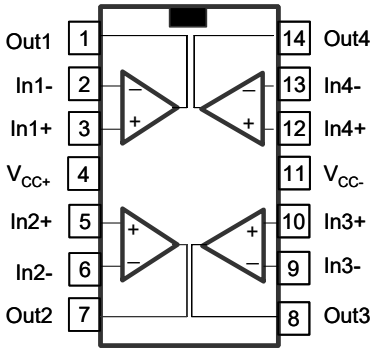


**TSV6294**
**TSSOP14**

## 5.Absolute Maximum Ratings

| Parameter | | Symbol | Value | Units |
|---|---|---|---|---|
| Supply voltage (1) | | $V_{CC}$ | 6 | V |
| Differential input voltage (2) | | $V_{id}$ | $\pm V_{CC}$ | V |
| Input voltage (3) | | $V_{in}$ | $(V_{CC-})$-0.2 to $(V_{CC+})$+0.2 | V |
| Input current (4) | | $I_{in}$ | 10 | mA |
| Shutdown voltage (3) | | SHDN | $(V_{CC-})$-0.2 to $(V_{CC+})$+0.2 | V |
| Storage temperature | | $T_{STG}$ | -65 to 150 | °C |
| Thermal resistance junction-to-ambient (5)(6) | SOP-8 | $R_{thja}$ | 125 | °C/W |
| | TSSOP-14 | | 100 | °C/W |
| Maximum junction temperature | | $T_J$ | 150 | °C |
| HBM: human body model (7) | | ESD | 4 | kV |
| MM: machine model (8) | | | 200 | V |
| CDM: charged device model (9) | | | 1.5 | kV |
| Latch-up immunity | | | 200 | mA |

Notes:

(1) All voltage values, except differential voltage, are with respect to network ground terminal.

(2) Differential voltages are the non-inverting input terminal with respect to the inverting input terminal.

(3) $V_{CC}$ - $V_{in}$ must not exceed 6 V, $V_{in}$ must not exceed 6 V.

(4) Input current must be limited by a resistor in series with the inputs.

(5) Short-circuits can cause excessive heating and destructive dissipation.

(6) Rth are typical values.

(7) Human body model: 100 pF discharged through a 1.5 kΩ resistor between two pins of the device, done for all couples of pin combinations with other pins floating.

(8) Machine mode: a 200 pF capacitor is charged to the specified voltage, then discharged directly between two pins of the device with no external series resistor (internal resistor < 5 Ω), done for all couples of pin combinations with other pins floating.

(9) Charged device model: all pins plus package are charged together to the specified voltage and then discharged directly to the ground.

## 6.Operating conditions

| Parameter | Symbol | Rating | Units |
|---|---|---|---|
| Supply voltage | $V_{CC}$ | 1.5 to 5.5 | V |
| Common mode input voltage range | $V_{icm}$ | $(V_{CC-})$-0.1 to $(V_{CC+})$+0.1 | V |
| Operating free air temperature range | $T_{oper}$ | 40 to +125 | °C |

## 7.1 DC Electrical Characteristics

($V_{CC+}$)=1.8V with ($V_{CC-}$)=0V, $V_{icm}$=$V_{CC}$/2, $T_{amb}$=25°C, and $R_L$ connected to $V_{CC}$/2 (unless otherwise specified)

| Parameter | Symbol | Conditions | Min | Typ | Max | Units |
|---|---|---|---|---|---|---|
| Offset voltage | $V_{io}$ | UMW TSV629x | | | 4 | mV |
| | | UMW TSV629xA | | | 0.8 | mV |
| | | $T_{min}$<$T_{op}$<$T_{max}$, UMW TSV629x | | | 6 | mV |
| | | $T_{min}$<$T_{op}$<$T_{max}$, UMW TSV629xA | | | 2 | mV |
| Input offset voltage drift | $DV_{io}$ | | | 2 | | μV/°C |
| Input offset current, $V_{out}$=$V_{CC}$/2 | $I_{io}$ | $T_{min}$<$T_{op}$<$T_{max}$ | | 1 | 10(1) | pA |
| | | | | 1 | 100 | pA |
| Input bias current, $V_{out}$=$V_{CC}$/2 | $I_{ib}$ | $T_{min}$<$T_{op}$<$T_{max}$ | | 1 | 10(1) | pA |
| | | | | 1 | 100 | pA |
| Common mode rejection ratio, 20 log ($\Delta V_{ic}/\Delta V_{io}$) | CMR | 0V to 1.8V, $V_{out}$=0.9V | 53 | 74 | | dB |
| | | $T_{min}$<$T_{op}$<$T_{max}$ | 51 | | | dB |
| Large signal voltage gain | $A_{vd}$ | $R_L$=10kΩ, $V_{out}$=0.5V to 1.3V | 78 | 95 | | dB |
| | | $T_{min}$<$T_{op}$<$T_{max}$ | 73 | | | dB |
| High-level output voltage $V_{OH}$=$V_{CC}$-$V_{OUT}$ | $V_{OH}$ | $R_L$=10kΩ | 35 | 5 | | mV |
| | | $T_{min}$<$T_{op}$<$T_{max}$ | 50 | | | mV |
| Low-level output voltage | $V_{OL}$ | $R_L$=10kΩ | | 4 | 35 | mV |
| | | $T_{min}$<$T_{op}$<$T_{max}$ | | | 50 | mV |
| Isink | $I_{OUT}$ | $V_{out}$=1.8V | 6 | 12 | | mA |
| | | $T_{min}$<$T_{op}$<$T_{max}$ | 4 | | | mA |
| Isource | | $V_{out}$=0V | 6 | 10 | | mA |
| | | $T_{min}$<$T_{op}$<$T_{max}$ | 4 | | | mA |
| Supply current (per operator) | $I_{CC}$ | No load, $V_{out}$=$V_{CC}$/2 | | 25 | 31 | μA |
| | | $T_{min}$<$T_{op}$<$T_{max}$ | | | 33 | μA |

| Parameter | Symbol | Conditions | Min | Typ | Max | Units |
|---|---|---|---|---|---|---|
| **AC performance** | | | | | | |
| Gain bandwidth product | GBP | $R_L$=10kΩ, $C_L$=100pF | | 1.1 | | MHz |
| Minimum gain for stability | Gain | Phase margin=60°, $R_f$=10kΩ, | | 4 | | V/V |
| | | $R_L$=10kΩ, $C_L$=20pF, $T_{op}$=25°C | | -3 | | V/V |
| Slew rate | SR | $R_L$=10kΩ, $C_L$=100pF<br>$V_{out}$=0.5V to 1.3V | | 0.33 | | V/μs |

1. Guaranteed by design.

## 7.2 DC Electrical Characteristics

Shutdown characteristics $V_{CC}$=1.8V

| Parameter | Symbol | Conditions | Min | Typ | Max | Units |
|---|---|---|---|---|---|---|
| Supply current in shutdown mode (all operators) | $I_{CC}$ | SHDN=$V_{CC-}$ | | 2.5 | 50 | nA |
| | | $T_{min}$<$T_{op}$<85°C | | | 200 | nA |
| | | $T_{min}$<$T_{op}$<125°C | | | 1.5 | μA |
| Amplifier turn-on time | $t_{on}$ | $R_L$=5k, $V_{out}$=$V_{CC-}$ to $V_{CC-}$ + 0.2V | | 200 | | ns |
| Amplifier turn-off time | $t_{off}$ | $R_L$=5k, $V_{out}$=$V_{CC+}$ -0.5V to $V_{CC+}$ -0.7V | | 20 | | ns |
| SHDN logic high | $V_{IH}$ | | 1.35 | | | V |
| SHDN logic low | $V_{IL}$ | | | | 0.6 | V |
| SHDN current high | $I_{IH}$ | SHDN=$V_{CC+}$ | | 10 | | pA |
| SHDN current low | $I_{IL}$ | SHDN=$V_{CC-}$ | | 10 | | pA |
| Output leakage in shutdown mode | $I_{OLeak}$ | SHDN=$V_{CC-}$ | | 50 | | pA |
| | | $T_{min}$<$T_{op}$<125°C | | 1 | | nA |

## 7.3 DC Electrical Characteristics

($V_{CC+}$)=3.3V with ($V_{CC-}$)=0V, $V_{icm}$=$V_{CC}$/2, $T_{amb}$=25°C, and $R_L$ connected to $V_{CC}$/2 (unless otherwise specified)

| Parameter | Symbol | Conditions | Min | Typ | Max | Units |
|---|---|---|---|---|---|---|
| Offset voltage | $V_{io}$ | UMW TSV629x | | | 4 | mV |
| | | UMW TSV629xA | | | 0.8 | mV |
| | | $T_{min}$<$T_{op}$<$T_{max}$, UMW TSV629x | | | 6 | mV |
| | | $T_{min}$<$T_{op}$<$T_{max}$, UMW TSV629xA | | | 2 | mV |
| Input offset voltage drift | $DV_{io}$ | | | 2 | | μV/°C |
| Input offset current | $I_{io}$ | $T_{min}$<$T_{op}$<$T_{max}$ | | 1 | 10(1) | pA |
| | | | | 1 | 100 | pA |
| Input bias current | $I_{ib}$ | $T_{min}$<$T_{op}$<$T_{max}$ | | 1 | 10(1) | pA |
| | | | | 1 | 100 | pA |
| Common mode rejection ratio, 20 log ($\Delta V_{ic}/\Delta V_{io}$) | CMR | 0V to 3.3V, $V_{out}$=1.65V | 57 | 79 | | dB |
| | | $T_{min}$<$T_{op}$<$T_{max}$ | 53 | | | dB |
| Large signal voltage gain | $A_{vd}$ | $R_L$=10kΩ, $V_{out}$=0.5V to 2.8V | 81 | 98 | | dB |
| | | $T_{min}$<$T_{op}$<$T_{max}$ | 76 | | | dB |
| High-level output voltage $V_{OH}$=$V_{CC}$-$V_{OUT}$ | $V_{OH}$ | $R_L$=10kΩ | 35 | 5 | | mV |
| | | $T_{min}$<$T_{op}$<$T_{max}$ | 50 | | | mV |
| Low-level output voltage | $V_{OL}$ | $R_L$=10kΩ | | 4 | 35 | mV |
| | | $T_{min}$<$T_{op}$<$T_{max}$ | | | 50 | mV |
| Isink | $I_{OUT}$ | $V_{out}$=5V | 23 | 45 | | mA |
| | | $T_{min}$<$T_{op}$<$T_{max}$ | 20 | | | mA |
| Isource | | $V_{out}$=0V | 23 | 38 | | mA |
| | | $T_{min}$<$T_{op}$<$T_{max}$ | 20 | | | mA |
| Supply current (per operator) | $I_{CC}$ | No load, $V_{out}$=2.5V | | 26 | 33 | μA |
| | | $T_{min}$<$T_{op}$<$T_{max}$ | | | 35 | μA |

| Parameter | Symbol | Conditions | Min | Typ | Max | Units |
|---|---|---|---|---|---|---|
| **AC performance** | | | | | | |
| Gain bandwidth product | GBP | $R_L$=10kΩ, $C_L$=100pF | | 1.2 | | MHz |
| Minimum gain for stability | Gain | Phase margin=60°, $R_f$=10kΩ, | | 4 | | V/V |
| | | $R_L$=10kΩ, $C_L$=20pF, $T_{op}$=25°C | | -3 | | V/V |
| Slew rate | SR | $R_L$=10kΩ, $C_L$=100pF<br>$V_{out}$=0.5V to 2.8V | | 0.4 | | V/μs |

1. Guaranteed by design.

## 7.4 DC Electrical Characteristics

($V_{CC+}$)=5V with ($V_{CC-}$)=0V, $V_{icm}$=$V_{CC}$/2, $T_{amb}$=25°C, and $R_L$ connected to $V_{CC}$/2 (unless otherwise specified)

| Parameter | Symbol | Conditions | Min | Typ | Max | Units |
|---|---|---|---|---|---|---|
| High level output voltage Offset voltage | $V_{io}$ | UMW TSV629x | | | 4 | mV |
| | | UMW TSV629xA | | | 0.8 | mV |
| | | $T_{min}$<$T_{op}$<$T_{max}$, UMW TSV629x | | | 6 | mV |
| | | $T_{min}$<$T_{op}$<$T_{max}$, UMW TSV629xA | | | 2 | mV |
| Input offset voltage drift | $DV_{io}$ | | | 2 | | μV/°C |
| Input offset current | $I_{io}$ | $T_{min}$<$T_{op}$<$T_{max}$ | | 1 | 10(1) | pA |
| | | | | 1 | 100 | pA |
| Input bias current | $I_{ib}$ | $T_{min}$<$T_{op}$<$T_{max}$ | | 1 | 10(1) | pA |
| | | | | 1 | 100 | pA |
| Common mode rejection ratio, 20 log ($\Delta V_{ic}/\Delta V_{io}$) | CMR | 0V to 5V, $V_{out}$=2.5V | 60 | 80 | | dB |
| | | $T_{min}$<$T_{op}$<$T_{max}$ | 55 | | | dB |
| Large signal voltage gain | $A_{vd}$ | $R_L$=10kΩ, $V_{out}$=0.5V to 4.5V | 85 | 98 | | dB |
| | | $T_{min}$<$T_{op}$<$T_{max}$ | 80 | | | dB |
| Supply voltage rejection ratio 20 log ($\Delta V_{CC}/\Delta V_{io}$) | SVR | $V_{CC}$=1.8 to 5V | 75 | 102 | | dB |
| | | $T_{min}$<$T_{op}$<$T_{max}$ | 73 | | | dB |
| EMI rejection ratio EMIRR=-20 log ($V_{RFpeak}/\Delta V_{io}$) | EMIRR | $V_{RF}$=100$mV_{rms}$, f=400MHz | | 61 | | dB |
| | | $V_{RF}$=100$mV_{rms}$, f=900MHz | | 85 | | dB |
| | | $V_{RF}$=100$mV_{rms}$, f=1800MHz | | 92 | | dB |
| | | $V_{RF}$=100$mV_{rms}$, f=2400MHz | | 83 | | dB |
| High level output voltage $V_{OH}$=$V_{CC}$-$V_{OUT}$ | $V_{OH}$ | $R_L$=10kΩ | 35 | 7 | | mV |
| | | $T_{min}$<$T_{op}$<$T_{max}$ | 50 | | | mV |
| Low level output voltage | $V_{OL}$ | $R_L$=10kΩ | | 6 | 35 | mV |
| | | $T_{min}$<$T_{op}$<$T_{max}$ | | | 50 | mV |

| Parameter | Symbol | Conditions | Min | Typ | Max | Units |
|---|---|---|---|---|---|---|
| $I_{sink}$ | $I_{OUT}$ | $V_O$=5V | 40 | 69 | | mA |
| | | $T_{min}$<$T_{op}$<$T_{max}$ | 35 | | | mA |
| $I_{source}$ | | $V_O$=0V | 40 | 74 | | mA |
| | | $T_{min}$<$T_{op}$<$T_{max}$ | 35 | | | mA |
| Supply current (per operator) | $I_{CC}$ | No load, $V_{out}$=2.5V | | 29 | 36 | μA |
| | | $T_{min}$<$T_{op}$<$T_{max}$ | | | 38 | μA |
| **AC performance** | | | | | | |
| Gain bandwidth product | GBP | $R_L$=10kΩ, $C_L$=100pF | | 1.3 | | MHz |
| Minimum gain for stability | Gain | Phase margin=60°, $R_f$=10kΩ, | | 4 | | V/V |
| | | $R_L$=10kΩ, $C_L$=20pF, $T_{op}$=25°C | | -3 | | V/V |
| Slew rate | SR | $R_L$=10kΩ, $C_L$=100pF<br>$V_{out}$=0.5V to 2.8V | | 0.5 | | V/μs |
| Equivalent input noise voltage | $e_n$ | f=1kHz | | 77 | | $\frac{nV}{\sqrt{Hz}}$ |
| Total harmonic distortion + noise | THD+N | $A_V$=-10, $f_{in}$=1kHz, $R_L$=100kΩ,<br>$V_{icm}$=$V_{CC}$/2, $V_{out}$=1$V_{rms}$, BW=22kHz | | 0.03 | | % |

1. Guaranteed by design.

## 7.5 DC Electrical Characteristics

Shutdown characteristics $V_{CC}$=5V

| Parameter | Symbol | Conditions | Min | Typ | Max | Units |
|---|---|---|---|---|---|---|
| Supply current in shutdown mode (all operators) | $I_{CC}$ | SHDN=$V_{IL}$ | | 5 | 50 | nA |
| | | $T_{min}$<$T_{op}$<85°C | | | 200 | nA |
| | | $T_{min}$<$T_{op}$<125°C | | | 1.5 | μA |
| Amplifier turn-on time | $t_{on}$ | $R_L$=5k, $V_{out}$=$V_{CC-}$ to $V_{CC-}$ + 0.2V | | 200 | | ns |
| Amplifier turn-off time | $t_{off}$ | $R_L$=5k, $V_{out}$=$V_{CC+}$ -0.5V to $V_{CC+}$ -0.7V | | 20 | | ns |
| SHDN logic high | $V_{IH}$ | | 2 | | | V |
| SHDN logic low | $V_{IL}$ | | | | 0.8 | V |
| SHDN current high | $I_{IH}$ | SHDN=$V_{CC+}$ | | 10 | | pA |
| SHDN current low | $I_{IL}$ | SHDN=$V_{CC-}$ | | 10 | | pA |
| Output leakage in shutdown mode | $I_{OLeak}$ | SHDN=$V_{CC-}$ | | 50 | | pA |
| | | $T_{min}$<$T_{op}$<125°C | | 1 | | nA |

## 8.1 Typical characteristic

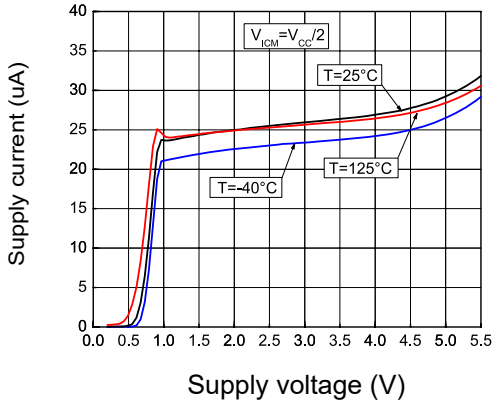


Figure 1: Supply current vs. supply voltage at $V_{icm}= V_{CC}/2$

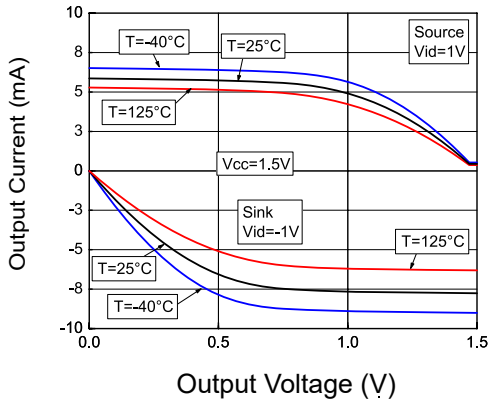


Figure 2: Output current vs. output voltage at $V_{CC}$=1.5V

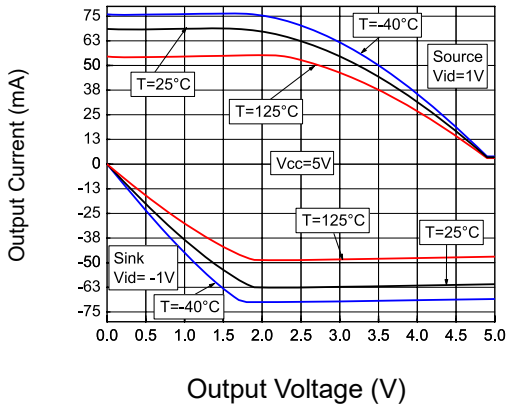


Figure 3: Output current vs. output voltage at $V_{CC}$=5V

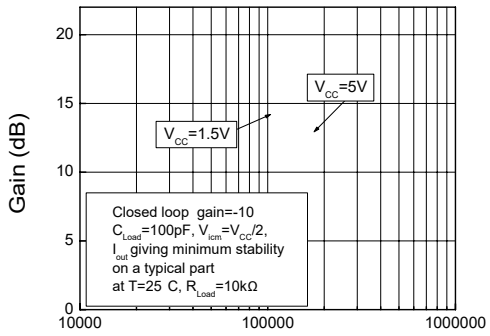


Figure 4: Peaking at closed loop gain = -10 at $V_{CC}$=1.5V and $V_{CC}$=5V

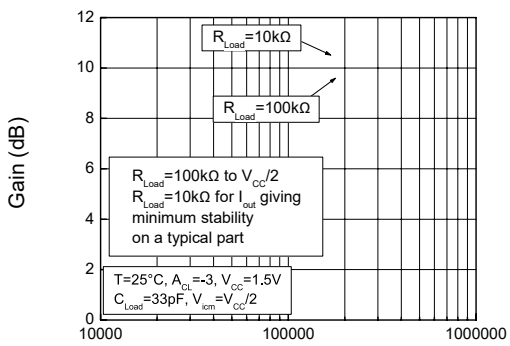


Figure 5: Peaking at closed loop gain =-3, $V_{CC}$=1.5V

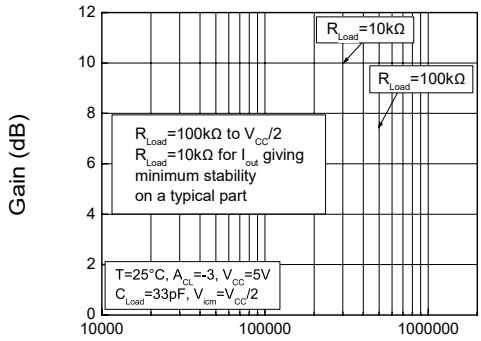


Figure 6: Peaking at closed loop gain = -3, $V_{CC}$=5V

## 8.2 Typical characteristic

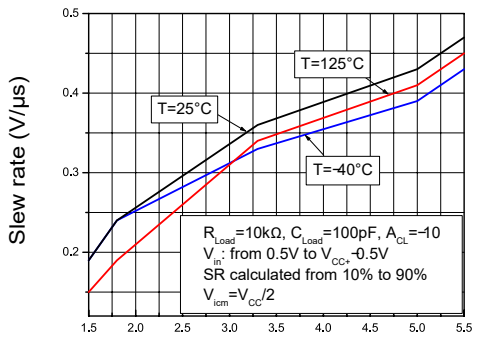


Figure 7: Positive slew rate vs. supply voltage in closed loop

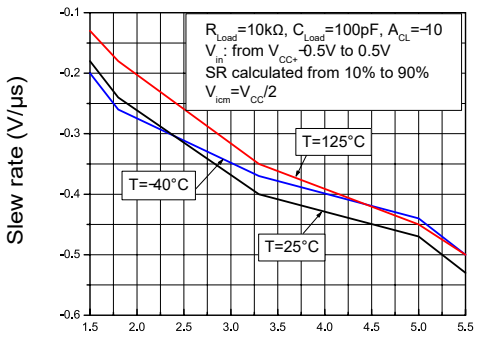


Figure 8: Negative slew rate vs. supply voltage in closed loop

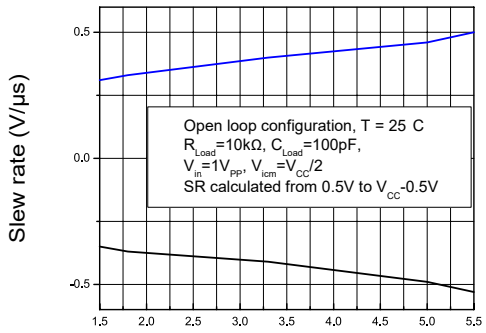


Figure 9: Slew rate vs. supply voltage in open loop

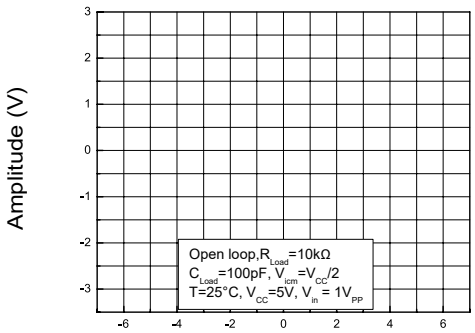


Figure 10: Slew rate timing in open loop

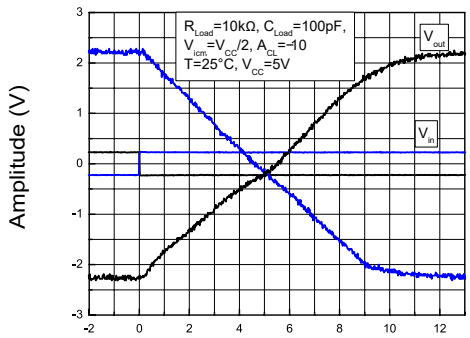


Figure 11: Slew rate timing in closed loop

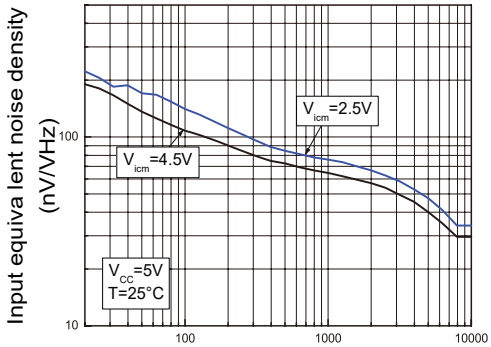


Figure 12: Noise at $V_{CC}$=5V

## 8.3 Typical characteristic

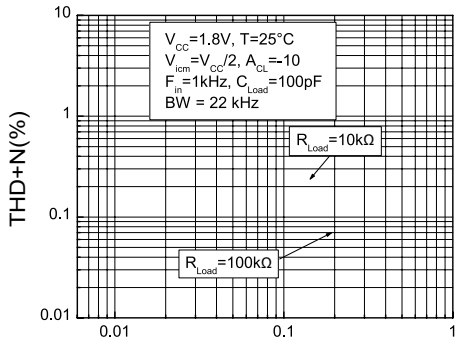


Ouput voltage ($V_{rms}$)

Figure 13: Distortion + noise vs. output voltage at $V_{CC}$=1.8V

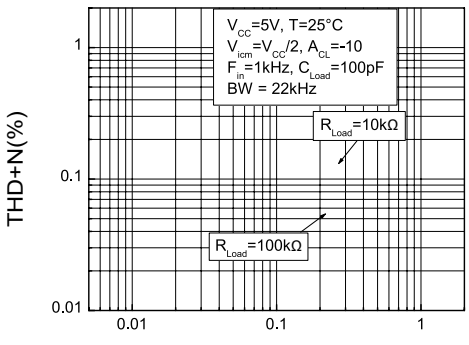


Ouput voltage ($V_{rms}$)

Figure 14: Distortion + noise vs. output voltage at $V_{CC}$=5V

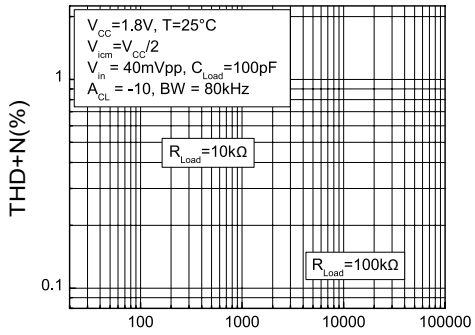


Frequency (Hz)

Figure 15: Distortion + noise vs. frequency at $V_{CC}$=1.8V

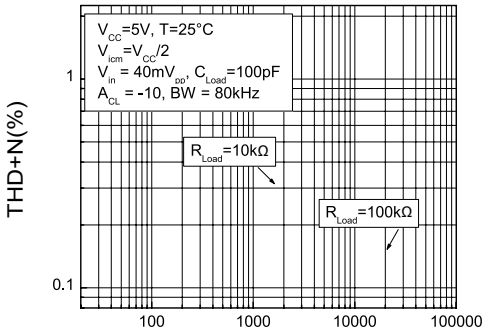


Frequency (Hz)

Figure 16: Distortion + noise vs. frequency at $V_{CC}$=5V

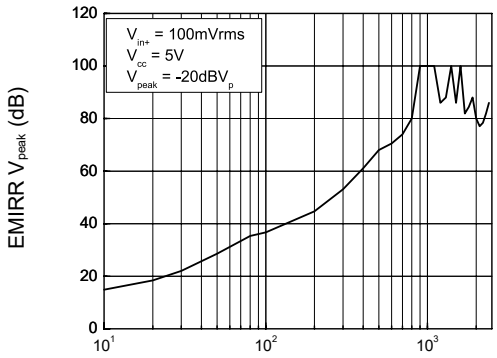


Input Common Mode Voltage (V)

Figure 17: EMIRR vs. frequency at $V_{CC}$=5V, T=25°C

## 8.4 Typical characteristic

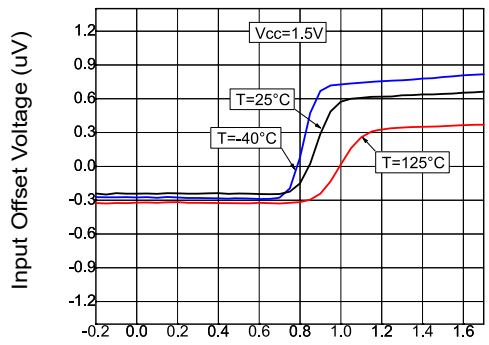


Figure 18: Input offset voltage vs input common mode at $V_{CC}$=1.5V

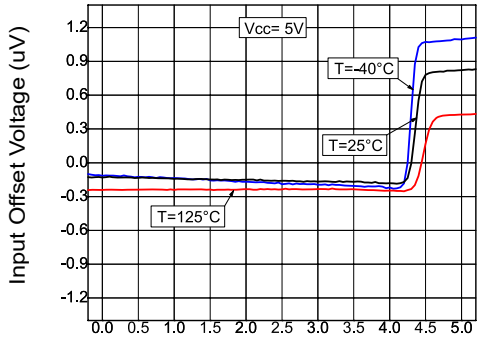


Figure 19: Input offset voltage vs input common mode at $V_{CC}$=5V

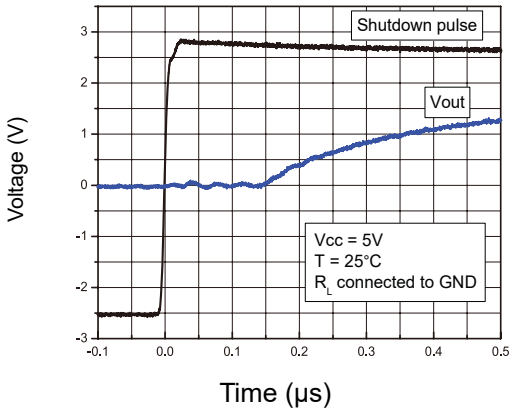


Figure 20: Turn-on time, $V_{CC}$=5V, Vout pulled down, T=25°C

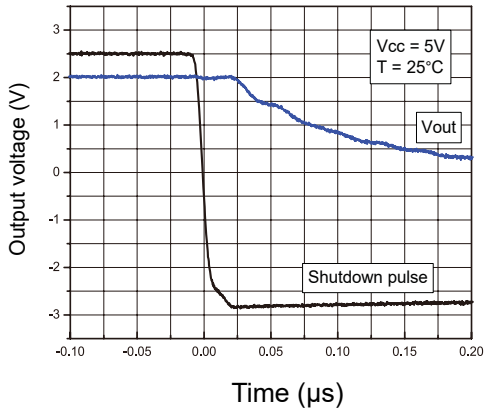


Figure 21: Turn-off time, $V_{CC}$=5V, Vout pulled down, T=25°C

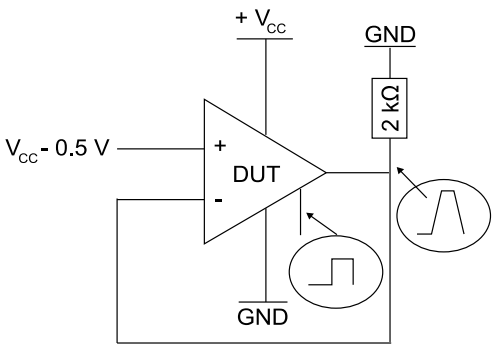


Figure 21: Test configuration for turn-on time (Vout pulled down)

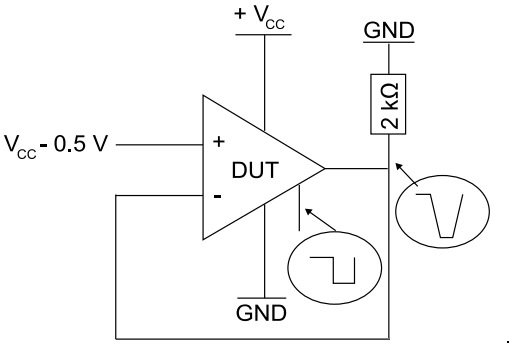


Figure 21: Test configuration for turn-off time (Vout pulled down)

## 9.1 SOP-8 Package Outline Dimensions

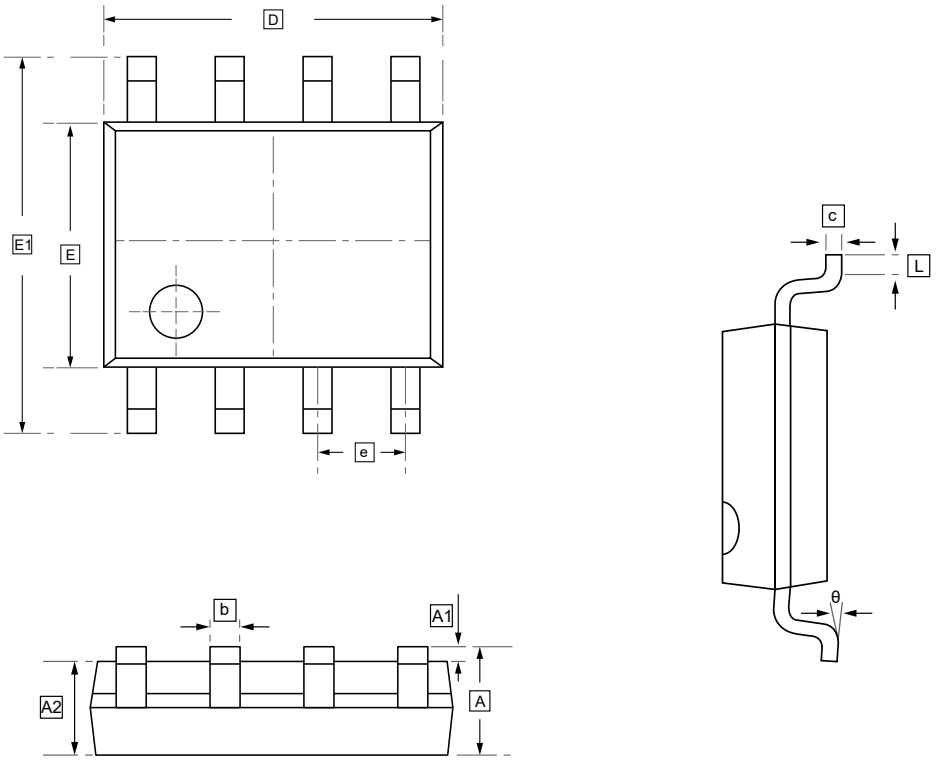


**DIMENSIONS (mm are the original dimensions)**

| Symbol | A | A1 | A2 | b | c | D | E | E1 | e | L | θ |
|---|---|---|---|---|---|---|---|---|---|---|---|
| **Min** | 1.350 | 0.000 | 1.350 | 0.330 | 0.170 | 4.700 | 3.800 | 5.800 | 1.270 | 0.400 | 0° |
| **Max** | 1.750 | 0.100 | 1.550 | 0.510 | 0.250 | 5.100 | 4.000 | 6.200 | BSC | 1.270 | 8° |

## 9.2 TSSOP-14 Package Outline Dimensions

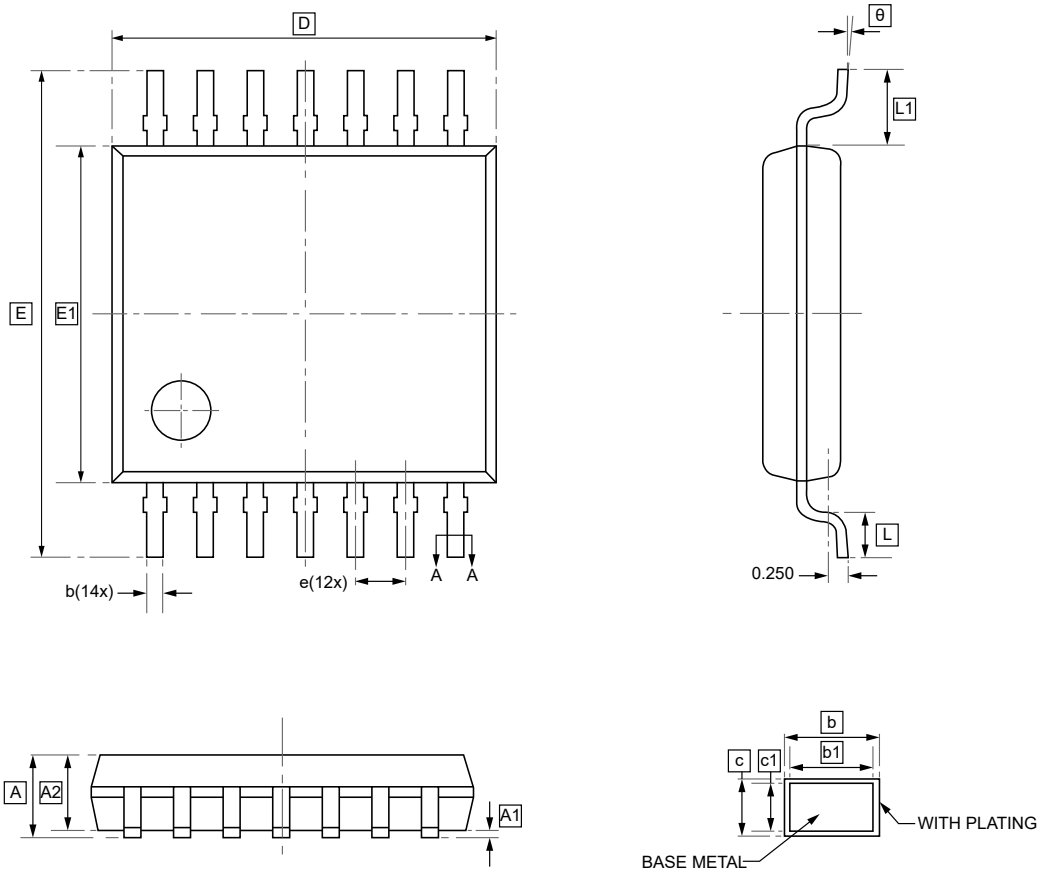


**DIMENSIONS (mm are the original dimensions)**

| Symbol | A | A1 | A2 | b | b1 | c | c1 | D | E | E1 | e | L1 |
|---|---|---|---|---|---|---|---|---|---|---|---|---|
| Min | - | 0.05 | 0.90 | 0.20 | 0.19 | 0.13 | 0.120 | 4.90 | 6.20 | 4.30 | 0.65 | 0.85 |
| Max | 1.20 | 0.15 | 1.05 | 0.28 | 0.25 | 0.17 | 0.14 | 5.10 | 6.60 | 4.50 | BSC | 1.15 |

| Symbol | L | θ |
|---|---|---|
| Min | 0.45 | 0° |
| Max | 0.75 | 8° |

## 10.Ordering information

SOP-8

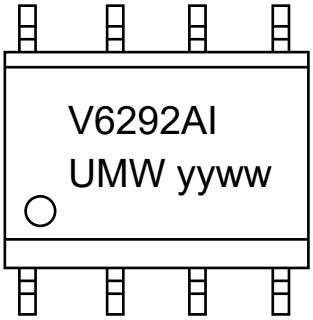


TSSOP-14

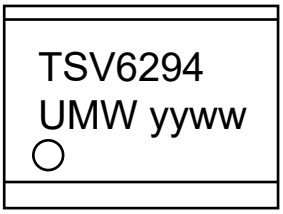


yy: Year Code
ww: Week Code

| Order Code | Marking | Package | Base QTY | Delivery Mode |
|---|---|---|---|---|
| UMW TSV6292IDT | V6292I | SOP-8 | 2500 | Tape and reel |
| UMW TSV6292AIDT | V6292AI | SOP-8 | 2500 | Tape and reel |
| UMW TSV6294APT | TSV6294 | TSSOP-14 | 4000 | Tape and reel |
| UMW TSV6294IPT | TSV6294 | TSSOP-14 | 4000 | Tape and reel |

## 11.Disclaimer

UMW reserves the right to make changes to all products, specifications. Customers should obtain the latest version of product documentation and verify the completeness and currency of the information before placing an order.

When applying our products, please do not exceed the maximum rated values, as this may affect the reliability of the entire system. Under certain conditions, any semiconductor product may experience faults or failures. Buyers are responsible for adhering to safety standards and implementing safety measures during system design, prototyping, and manufacturing when using our products to prevent potential failure risks that could lead to personal injury or property damage.

Unless explicitly stated in writing, UMW products are not intended for use in medical, life-saving, or life-sustaining applications, nor for any other applications where product failure could result in personal injury or death. If customers use or sell the product for such applications without explicit authorization, they assume all associated risks.

When reselling, applying, or exporting, please comply with export control laws and regulations of China, the United States, the United Kingdom, the European Union, and other relevant countries, regions, and international organizations.

This document and any actions by UMW do not grant any intellectual property rights, whether express or implied, by estoppel or otherwise. The product names and marks mentioned herein may be trademarks of their respective owners.