UMW TSV63x/TSV63xA

Dual and quad, rail-to-rail input/output, 60 μA, 880 kHz operational amplifiers

1.Description

The UMW TSV63x and UMW TSV63xA series of dual and quad operational amplifiers offers low voltage operation and rail-to-rail input and output. This family features an excellent speed/ power consumption ratio, offering an 880 kHz gainbandwidth product while consuming only 60μA at 5V supply voltage. These features make the UMW TSV63x and UMW TSV63xA family ideal for sensor interfaces, battery-supplied and portable applications, and active filtering.

2.Features

- Rail-to-rail input and output
- Low power consumption: 60μA typ at 5V
- Low supply voltage: 1.5V - 5.5V
- Gain bandwidth product: 880 kHz typ
- Unity gain stable on 100pF capacitor
- Low power shutdown mode: 5 nA typ
- Low offset voltage: 800μV max (A version)
- Low input bias current: 1 pA typ
- EMI hardened op amps
- Automotive qualification

3.Applications

- Battery-powered applications
- Portable devices
- Signal conditioning
- Active filtering
- Medical instrumentation

4.Pinning information

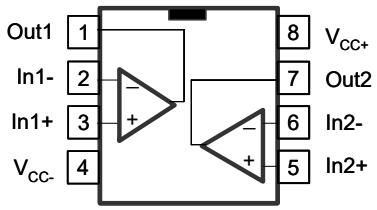

SOP-8

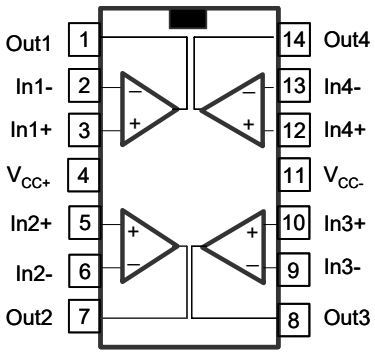

TSSOP14

5.Absolute Maximum Ratings

Parameter		Symbol	Value	Units
Supply voltage (1)		V_{CC}	6	V
Differential input voltage (2)		V_{id}	$\pm V_{CC}$	V
Input voltage (3)		V_{in}	(V_{CC-})-0.2 to (V_{CC+})+0.2	V
Input current (4)		I_{in}	10	mA
Shutdown voltage (3)		SHDN	(V_{CC-})-0.2 to (V_{CC+})+0.2	V
Storage temperature		T_{STG}	-65 to 150	°C
Thermal resistance junction-to-ambient (5)(6)	SOP-8	R_{thja}	125	°C/W
	TSSOP-14		100	°C/W
Maximum junction temperature		T_J	150	°C
HBM: human body model (7)		ESD	4000	V
MM: machine model (8)			300	V
CDM: charged device model (9)			1500	V
Latch-up immunity			200	mA

Notes:

(1) All voltage values, except differential voltage, are with respect to network ground terminal.

(2) Differential voltages are the non-inverting input terminal with respect to the inverting input terminal.

(3) V_{CC} - V_{in} must not exceed 6 V, V_{in} must not exceed 6 V.

(4) Input current must be limited by a resistor in series with the inputs.

(5) Short-circuits can cause excessive heating and destructive dissipation.

(6) Rth are typical values.

(7) Human body model: 100 pF discharged through a 1.5 kΩ resistor between two pins of the device, done for all couples of pin combinations with other pins floating.

(8) Machine mode: a 200 pF capacitor is charged to the specified voltage, then discharged directly between two pins of the device with no external series resistor (internal resistor < 5 Ω), done for all couples of pin combinations with other pins floating.

(9) Charged device model: all pins plus package are charged together to the specified voltage and then discharged directly to the ground.

6.Operating conditions

Parameter	Symbol	Rating	Units
Supply voltage	V_{CC}	1.5 to 5.5	V
Common mode input voltage range	V_{icm}	(V_{CC-})-0.1 to (V_{CC+})+0.1	V
Operating free air temperature range	T_{oper}	40 to +125	°C

7.1 DC Electrical Characteristics

(V_{CC+})=1.8V with (V_{CC-})=0V, V_{icm}=V_{CC}/2, T_{amb}=25°C, and R_L connected to V_{CC}/2 (unless otherwise specified)

Parameter	Symbol	Conditions	Min	Typ	Max	Units
Offset voltage	V_{io}	UMW TSV63x			3	mV
		UMW TSV63xA			0.8	mV
		T_{min}<T_{op}<T_{max}, UMW TSV63x			4.5	mV
		T_{min}<T_{op}<T_{max}, UMW TSV63xA			2	mV
Input offset voltage drift	$\Delta V_{io}/\Delta T$			2		µV/°C
Input offset current, V_{out}=V_{CC}/2	I_{io}	(V_{out}=V_{CC}/2)		1	10	pA
		T_{min}<T_{op}<T_{max}		1	100	pA
Input bias current, V_{out}=V_{CC}/2	I_{ib}	(V_{out}=V_{CC}/2)		1	10	pA
		T_{min}<T_{op}<T_{max}		1	100	pA
Common mode rejection ratio, 20 log ($\Delta V_{ic}/\Delta V_{io}$)	CMR	0V to 1.8V, V_{out}=0.9V	53	74		dB
		T_{min}<T_{op}<T_{max}	51			dB
Large signal voltage gain	A_{vd}	R_L=10kΩ, V_{out}=0.5V to 1.3V	85	95		dB
		T_{min}<T_{op}<T_{max}	80			dB
High-level output voltage (V_{OH}=V_{CC}-V_{OUT})	V_{OH}	R_L=10kΩ		5	35	mV
		T_{min}<T_{op}<T_{max}			50	mV
Low-level output voltage	V_{OL}	R_L=10kΩ		4	35	mV
		T_{min}<T_{op}<T_{max}			50	mV
I_{sink}	I_{OUT}	V_{out}=1.8V	6	12		mA
		T_{min}<T_{op}<T_{max}	4			mA
I_{source}		V_{out}=0V	6	10		mA
		T_{min}<T_{op}<T_{max}	4			mA
Supply current (per operator)	I_{CC}	No load, V_{out}=V_{CC}/2	40	50	60	µA
		T_{min}<T_{op}<T_{max}			62	µA

Parameter	Symbol	Conditions	Min	Typ	Max	Units
AC performance						
Gain bandwidth product	GBP	R_L=2kΩ, C_L=100pF, f=100kHz	700	790		kHz
Phase margin	ϕm	R_L=2kΩ, C_L=100pF		45		Degrees
Gain margin	G_m	R_L=2kΩ, C_L=100pF		13		dB
Slew rate	SR	R_L=2kΩ, C_L=100pF, A_V=1	0.2	0.27		V/µs
Equivalent input noise voltage	e_n	f=1kHz		60		nV/√Hz
		f=10kHz		33		nV/√Hz

7.2 DC Electrical Characteristics

Shutdown characteristics V_{CC}=1.8V

Parameter	Symbol	Conditions	Min	Typ	Max	Units
Supply current in shutdown mode (all operators)	I_{CC}	SHDN=V_{CC-}		2.5	50	nA
		T_{min}<T_{op}<85°C			200	nA
		T_{min}<T_{op}<125°C			1.5	µA
Amplifier turn-on time	t_{on}	R_L=2kΩ, V_{out}=V_{CC-} to V_{CC-} + 0.2V		200		ns
Amplifier turn-off time	t_{off}	R_L=2kΩ,V_{out}=V_{CC+} -0.5V to V_{CC+} -0.7V		20		ns
SHDN logic high	V_{IH}		1.35			V
SHDN logic low	V_{IL}				0.6	V
SHDN current high	I_{IH}	SHDN=V_{CC+}		10		pA
SHDN current low	I_{IL}	SHDN=V_{CC-}		10		pA
Output leakage in shutdown mode	I_{OLeak}	SHDN=V_{CC-}		50		pA
		T_{min}<T_{op}<125°C		1		nA

7.3 DC Electrical Characteristics

(V_{CC+})=3.3V with (V_{CC-})=0V, V_{icm}=V_{CC}/2, T_{amb}=25°C, and R_L connected to V_{CC}/2 (unless otherwise specified)

Parameter	Symbol	Conditions	Min	Typ	Max	Units
Offset voltage	V_{io}	UMW TSV63x			3	mV
		UMW TSV63xA			0.8	mV
		T_{min}<T_{op}<T_{max}, UMW TSV63x			4.5	mV
		T_{min}<T_{op}<T_{max}, UMW TSV63xA			2	mV
Input offset voltage drift	$\Delta V_{io}/\Delta T$			2		µV/°C
Input offset current	I_{io}	(V_{out}=V_{CC}/2)		1	10	pA
		T_{min}<T_{op}<T_{max}		1	100	pA
Input bias current	I_{ib}	(V_{out}=V_{CC}/2)		1	10	pA
		T_{min}<T_{op}<T_{max}		1	100	pA
Common mode rejection ratio, 20 log ($\Delta V_{ic}/\Delta V_{io}$)	CMR	0V to 3.3V, V_{out}=1.65V	57	79		dB
		T_{min}<T_{op}<T_{max}	53			dB
Large signal voltage gain	A_{vd}	R_L=10kΩ, V_{out}=0.5V to 2.8V	88	98		dB
		T_{min}<T_{op}<T_{max}	83			dB
High-level output voltage (V_{OH}=V_{CC} - V_{out})	V_{OH}	R_L=10kΩ		5	35	mV
		T_{min}<T_{op}<T_{max}			50	mV
Low-level output voltage	V_{OL}	R_L=10kΩ		4	35	mV
		T_{min}<T_{op}<T_{max}			50	mV
I_{sink}	I_{OUT}	V_{out}=3.3V	23	45		mA
		T_{min}<T_{op}<T_{max}	20			mA
I_{source}		V_{out}=0V	23	38		mA
		T_{min}<T_{op}<T_{max}	20			mA
Supply current (per channel)	I_{CC}	No load, V_{out}=1.75V	43	55	64	µA
		T_{min}<T_{op}<T_{max}			66	µA

Parameter	Symbol	Conditions	Min	Typ	Max	Units
AC performance						
Gain bandwidth product	GBP	R_L=2kΩ, C_L=100pF, f=100kHz	710	860		kHz
Phase margin	ϕm	R_L=2kΩ, C_L=100pF		46		Degrees
Gain margin	G_m	R_L=2kΩ, C_L=100pF		13		dB
Slew rate	SR	R_L=2kΩ, C_L=100pF, A_V=1	0.22	0.29		V/µs

7.4 DC Electrical Characteristics

(V_{CC+})=5V with (V_{CC-})=0V, V_{icm}=V_{CC}/2, T_{amb}=25°C, and R_L connected to V_{CC}/2 (unless otherwise specified)

Parameter	Symbol	Conditions	Min	Typ	Max	Units
Offset voltage	V_{io}	UMW TSV63x			3	mV
		UMW TSV63xA			0.8	mV
		T_{min}<T_{op}<T_{max}, UMW TSV63x			4.5	mV
		T_{min}<T_{op}<T_{max}, UMW TSV63xA			2	mV
Input offset voltage drift	$\Delta V_{io}/\Delta T$			2		µV/°C
Input offset current	I_{io}	(V_{out}=V_{CC}/2)		1	10(1)	pA
		T_{min}<T_{op}<T_{max}		1	100	pA
Input bias current	I_{ib}	(V_{out}=V_{CC}/2)		1	10(1)	pA
		T_{min}<T_{op}<T_{max}		1	100	pA
Common mode rejection ratio, 20 log ($\Delta V_{ic}/\Delta V_{io}$)	CMR	0V to 5V, V_{out}=2.5V	60	80		dB
		T_{min}<T_{op}<T_{max}	55			dB
Supply voltage rejection ratio 20 log ($\Delta V_{CC}/\Delta V_{io}$)	SVR	V_{CC}=1.8 to 5V	75	102		dB
		T_{min}<T_{op}<T_{max}	73			dB
Large signal voltage gain	A_{vd}	R_L=10kΩ, V_{out}=0.5V to 4.5V	89	98		dB
		T_{min}<T_{op}<T_{max}	84			dB
EMI rejection ratio EMIRR=-20 log ($V_{RFpeak}/\Delta V_{io}$)	EMIRR	V_{RF}=100mV_{rms}, f=400MHz		61		dB
		V_{RF}=100mV_{rms}, f=900MHz		85		dB
		V_{RF}=100mV_{rms}, f=1800MHz		92		dB
		V_{RF}=100mV_{rms}, f=2400MHz		83		dB
High level output voltage (V_{OH}=V_{CC} - V_{out})	V_{OH}	R_L=10kΩ		7	35	mV
		T_{min}<T_{op}<T_{max}			50	mV
Low level output voltage	V_{OL}	R_L=10kΩ		6	35	mV
		T_{min}<T_{op}<T_{max}			50	mV

Parameter	Symbol	Conditions	Min	Typ	Max	Units
I_{sink}	I_{OUT}	V_O=5V	40	69		mA
		T_{min}<T_{op}<T_{max}	35			mA
I_{source}		V_O=0V	40	74		mA
		T_{min}<T_{op}<T_{max}	35			mA
Supply current (per channel)	I_{CC}	No load, V_{out}=V_{CC}/2	50	60	69	µA
		T_{min}<T_{op}<T_{max}			72	µA
AC performance						
Gain bandwidth product	GBP	R_L=2kΩ, C_L=100pF, f=100kHz	730	880		kHz
Unity gain frequency	F_u	R_L=2kΩ, C_L=100pF		830		kHz
Phase margin	ϕm	R_L=2kΩ, C_L=100pF		48		Degrees
Gain margin	G_m	R_L=2kΩ, C_L=100pF		13		dB
Slew rate	SR	R_L=2kΩ, C_L=100pF, A_V=1	0.25	0.34		V/µs
Equivalent input noise voltage	e_n	f=1kHz		60		nV/√Hz
		f=10kHz		33		nV/√Hz
Total harmonic distortion + noise	THD+e_n	V_{CC}=5V, f=1kHz, A_V=1, R_L=100kΩ V_{icm}=V_{CC}/2, V_{OUT}=2V_{pp}		0.002		%

1. Guaranteed by design.

7.5 DC Electrical Characteristics

Shutdown characteristics V_{CC}=5V

Parameter	Symbol	Conditions	Min	Typ	Max	Units
Supply current in shutdown mode (all operators)	I_{CC}	SHDN=V_{CC}		5	50	nA
		T_{min}<T_{op}<85°C			200	nA
		T_{min}<T_{op}<125°C			1.5	µA
Amplifier turn-on time	t_{on}	R_L=2kΩ, V_{out}=V_{CC-} to V_{CC-} + 0.2V		200		ns
Amplifier turn-off time	t_{off}	R_L=2kΩ,V_{out}=V_{CC+} -0.5V to V_{CC+} -0.7V		20		ns
SHDN logic high	V_{IH}		2			V
SHDN logic low	V_{IL}				0.8	V
SHDN current high	I_{IH}	SHDN=V_{CC+}		10		pA
SHDN current low	I_{IL}	SHDN=V_{CC-}		10		pA
Output leakage in shutdown mode	I_{OLeak}	SHDN=V_{CC-}		50		pA
		T_{min}<T_{op}<125°C		1		nA

8.1 Typical characteristic

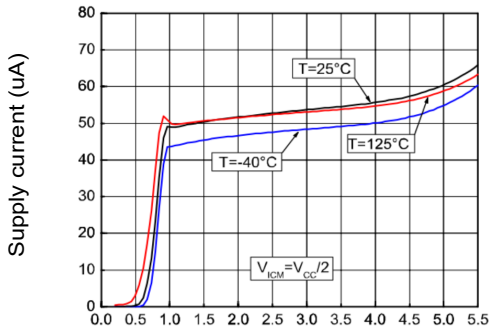

Figure 1: Supply current vs. supply voltage at V_{icm}= V_{CC}/2

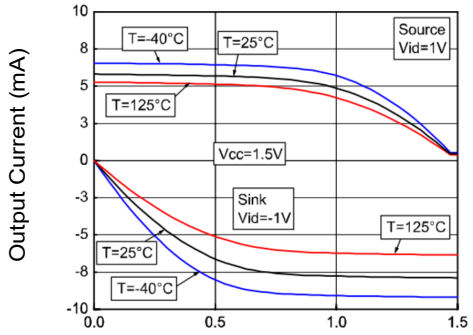

Figure 2: Output current vs. output voltage at V_{CC}=1.5V

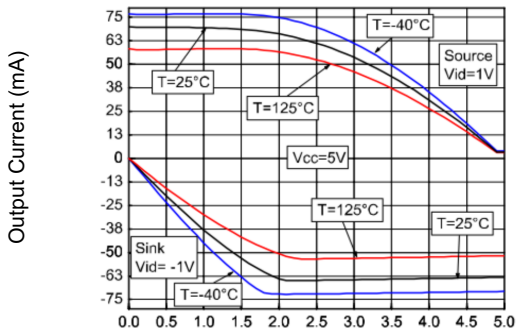

Figure 3: Output current vs. output voltage at V_{CC}=5V

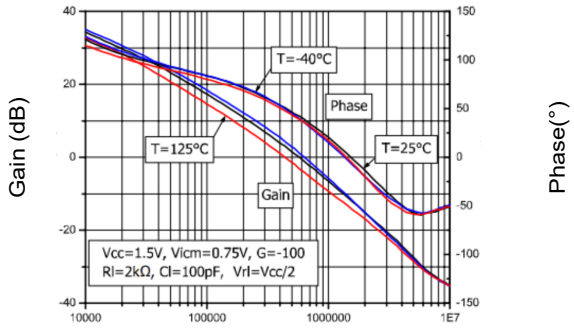

Figure 4: Peaking at closed loop gain = -10 at V_{CC}=1.5V and V_{CC}=5V

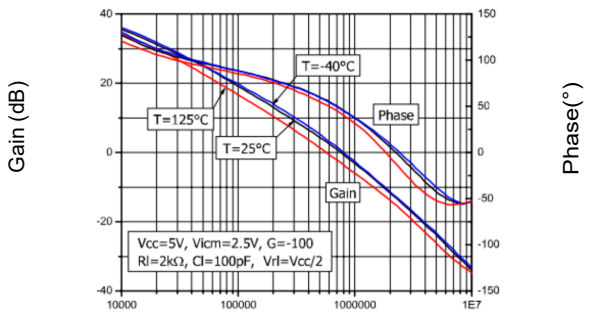

Figure 5: Voltage gain and phase vs. frequency at V_{CC}=5V

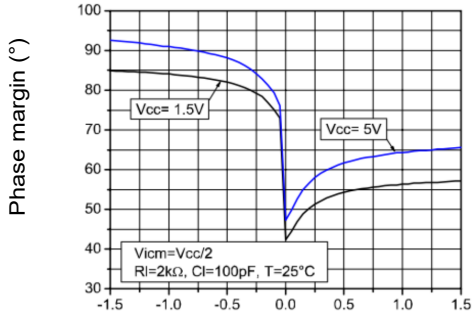

Figure 6: Peaking at closed loop gain = -3, V_{CC}=5V

8.2 Typical characteristic

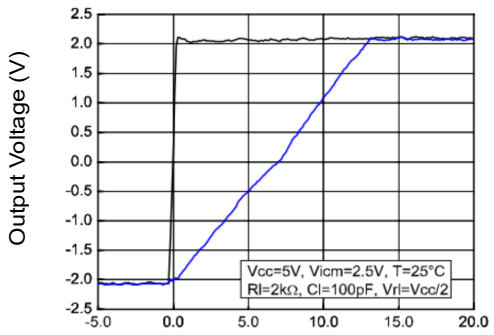

Figure 7: Positive slew rate vs.time

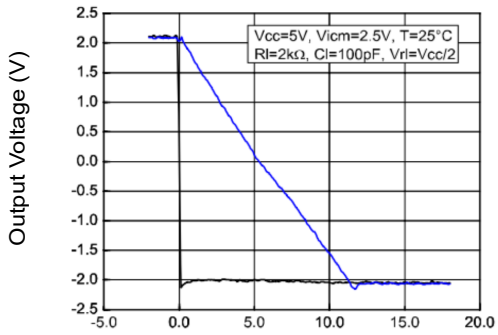

Figure 8: Negative slew rate vs. time

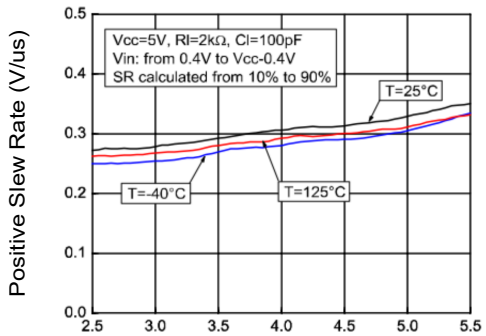

Figure 9: Positive slew rate vs. supply voltage

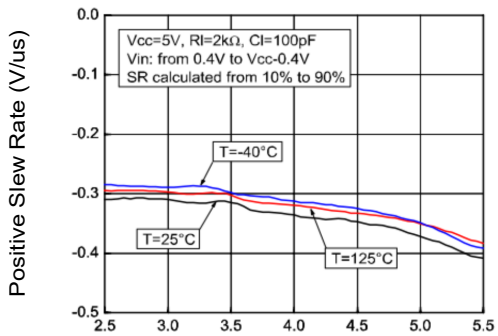

Figure 10: Negative slew rate vs. supply voltage

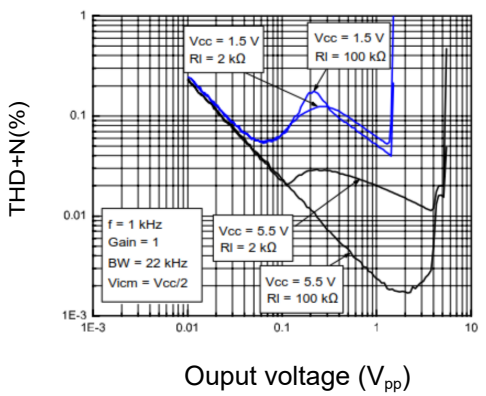

Figure 11: Distortion + noise vs. output voltage

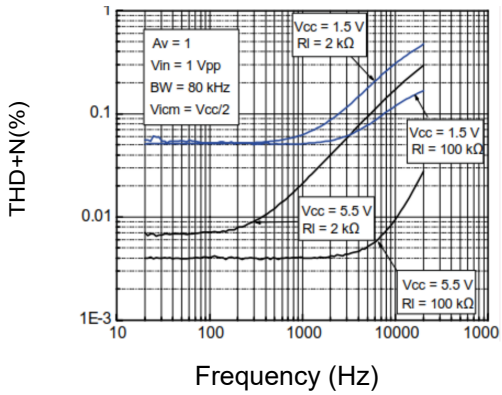

Figure 12: Distortion + noise vs. frequency

8.3 Typical characteristic

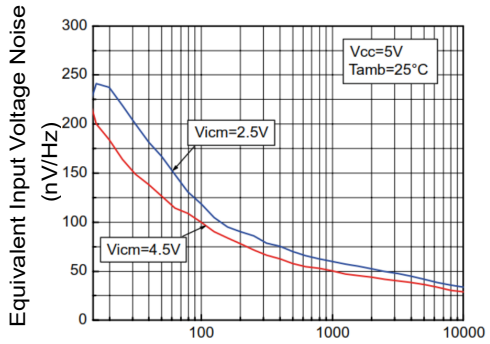

Figure 13: Noise vs. frequency

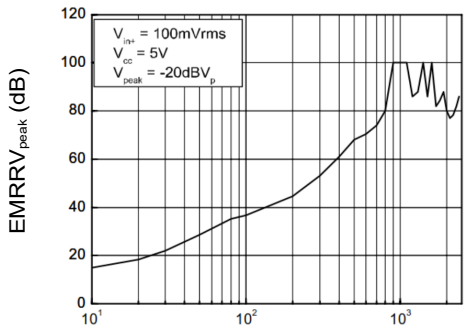

Figure 14: EMIRR vs. frequency at V_{CC}=5V, T=25°C

9.1 SOP-8 Package Outline Dimensions

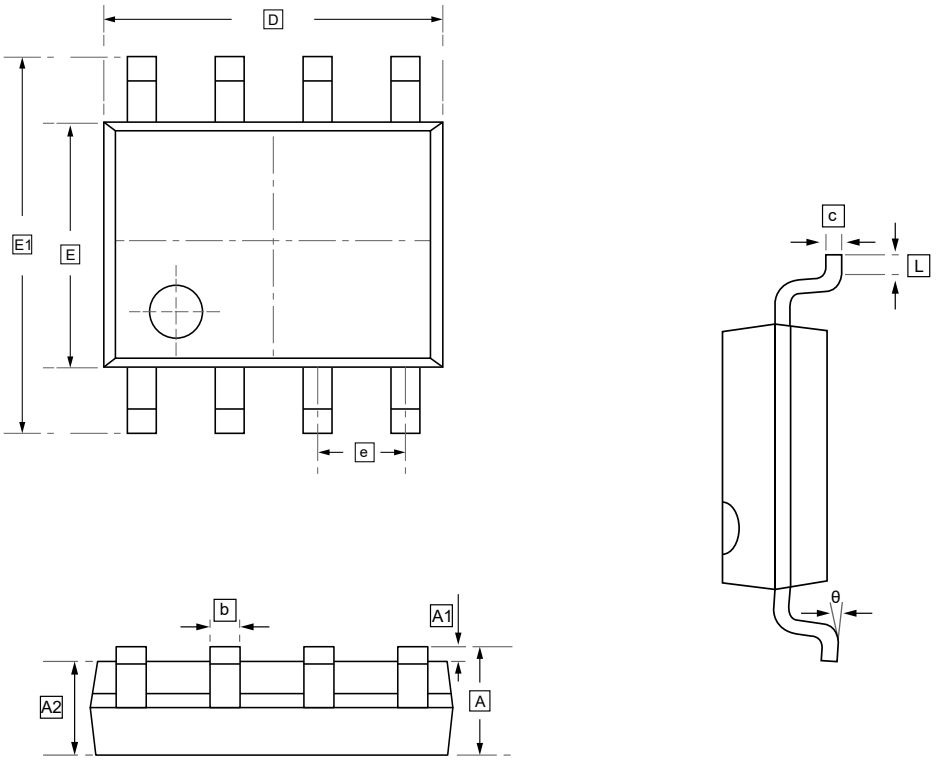

DIMENSIONS (mm are the original dimensions)

Symbol	A	A1	A2	b	c	D	E	E1	e	L	θ
Min	1.350	0.000	1.350	0.330	0.170	4.700	3.800	5.800	1.270	0.400	0°
Max	1.750	0.100	1.550	0.510	0.250	5.100	4.000	6.200	BSC	1.270	8°

9.2 TSSOP-14 Package Outline Dimensions

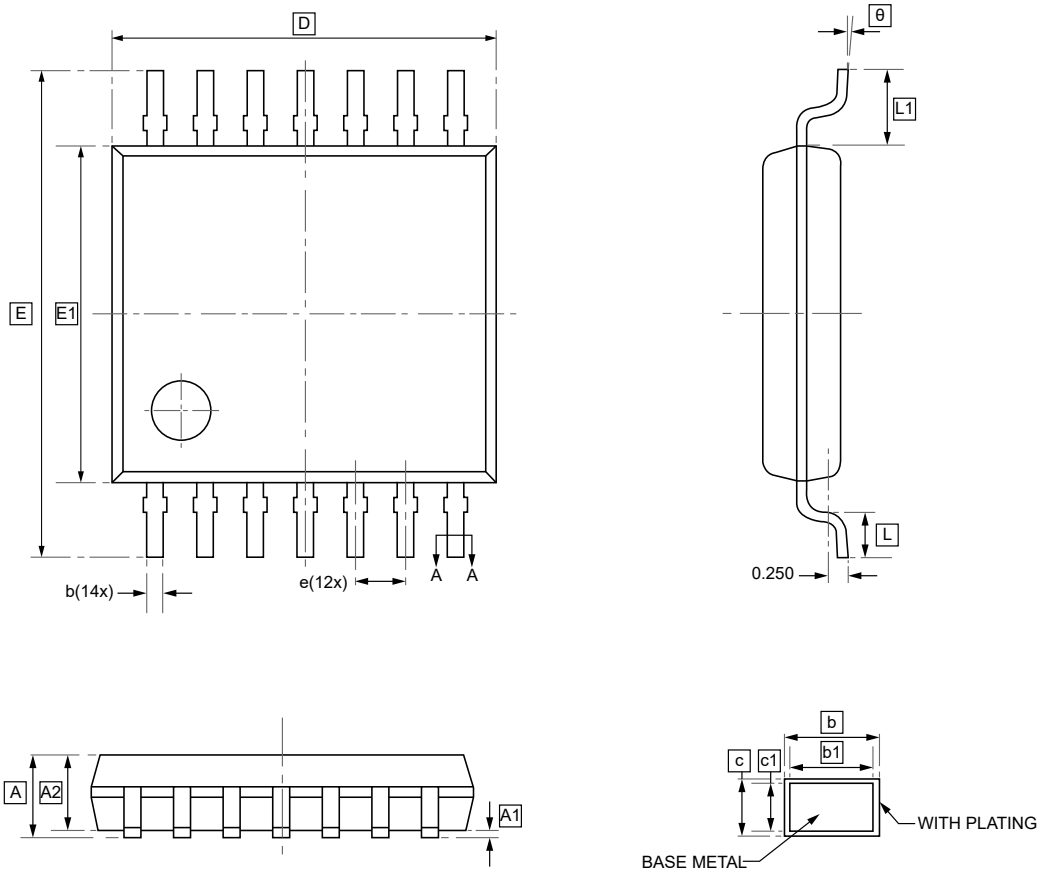

DIMENSIONS (mm are the original dimensions)

Symbol	A	A1	A2	b	b1	c	c1	D	E	E1	e	L1
Min	-	0.05	0.90	0.20	0.19	0.13	0.120	4.90	6.20	4.30	0.65	0.85
Max	1.20	0.15	1.05	0.28	0.25	0.17	0.14	5.10	6.60	4.50	BSC	1.15

Symbol	L	θ
Min	0.45	0°
Max	0.75	8°

10.Ordering information

SOP-8

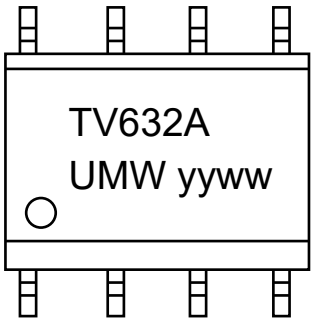

TSSOP-14

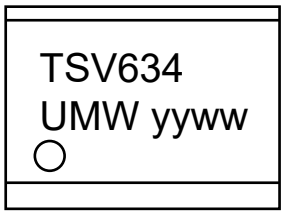

yy: Year Code
ww: Week Code

Order Code	Marking	Package	Base QTY	Delivery Mode
UMW TSV632IDT	TSV632	SOP-8	2500	Tape and reel
UMW TSV632AIDT	TSV632A	SOP-8	2500	Tape and reel
UMW TSV634IPT	TSV634	TSSOP-14	4000	Tape and reel

11.Disclaimer

UMW reserves the right to make changes to all products, specifications. Customers should obtain the latest version of product documentation and verify the completeness and currency of the information before placing an order.

When applying our products, please do not exceed the maximum rated values, as this may affect the reliability of the entire system. Under certain conditions, any semiconductor product may experience faults or failures. Buyers are responsible for adhering to safety standards and implementing safety measures during system design, prototyping, and manufacturing when using our products to prevent potential failure risks that could lead to personal injury or property damage.

Unless explicitly stated in writing, UMW products are not intended for use in medical, life-saving, or life-sustaining applications, nor for any other applications where product failure could result in personal injury or death. If customers use or sell the product for such applications without explicit authorization, they assume all associated risks.

When reselling, applying, or exporting, please comply with export control laws and regulations of China, the United States, the United Kingdom, the European Union, and other relevant countries, regions, and international organizations.

This document and any actions by UMW do not grant any intellectual property rights, whether express or implied, by estoppel or otherwise. The product names and marks mentioned herein may be trademarks of their respective owners.