# UMW TSV91x/TSV91xA

Single, dual, and quad rail-to-rail input/output 8 MHz operational amplifiers

## 1.Description

The UMW TSV91x and TSV91xA operational amplifiers (op amps) offer low voltage operation and rail-to-rail input and output, as well as an excellent speed/power consumption ratio, providing an 8 MHz gain-bandwidth product while consuming only 1.1mA maximum at 5V. The op amps are unity gain stable and feature an ultra-low input bias current. The devices are ideal for sensor interfaces, battery-supplied and portable applications, as well as active filtering.

## 2.Features

- Rail-to-rail input and output
- Wide bandwidth
- Low power consumption: 820μA typ.
- Unity gain stability
- High output current: 35mA
- Operating from 2.5V to 5.5V
- Low input bias current, 1pA typ.
- Low input offset voltage: 1.5mV max.(A grade)
- ESD internal protection≥5kV
- Latch-up immunity

## 3.Applications

- attery-powered applications
- Portable devices
- Signal conditioning
- Active filtering
- Medical instrumentation
- Automotive applications

## 4.Pinning information

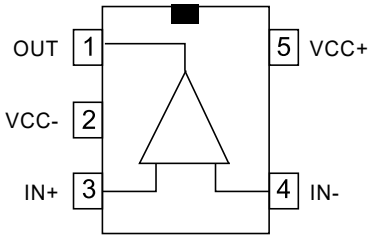


**SOT23-5**
**TSV911ILT**

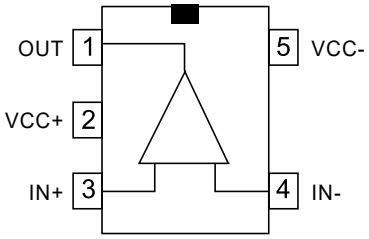


**SOT23-5**
**TSV911RILT**

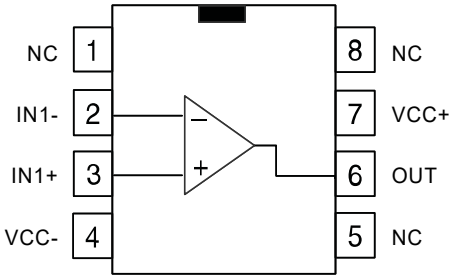


**SOP-8**
**(single)**

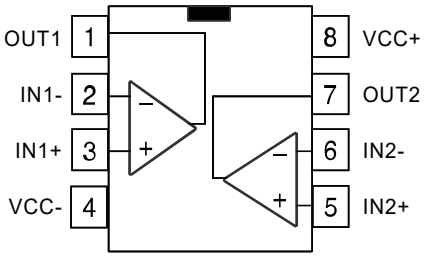


**SOP-8(dual)**

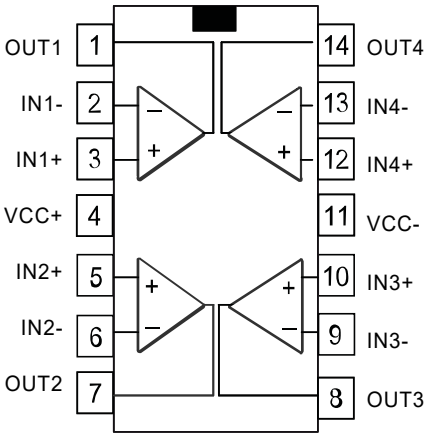


**SO14/TSSOP14**

## 5.Absolute Maximum Ratings

| Parameter | | Symbol | Rating | Units |
|---|---|---|---|---|
| Supply voltage (1) | | $V_{CC}$ | 6 | V |
| Differential input voltage (2) | | $V_{id}$ | $\pm V_{CC}$ | V |
| Input voltage (3) | | $V_{in}$ | $(V_{CC-})$-0.2 to $(V_{CC+})$+0.2 | V |
| Storage temperature (4) | | $I_{in}$ | 10 | mA |
| Storage temperature | | $T_{STG}$ | -65 to 150 | °C |
| Maximum junction temperature | | $T_J$ | 150 | °C |
| Thermal resistance junction to ambient (5)(6) | SOT23-5 | $R_{thja}$ | 250 | °C/W |
| | SOP-8 | | 125 | °C/W |
| | SOP-14 | | 103 | °C/W |
| | TSSOP-14 | | 100 | °C/W |
| Thermal resistance junction-to-case (5)(6) | SOT23-5 | $R_{thjC}$ | 81 | °C/W |
| | SOP-8 | | 40 | °C/W |
| | SOP-14 | | 39 | °C/W |
| | TSSOP-14 | | 31 | °C/W |
| HBM: human body model (7) | | | 5 | kV |
| MM: machine model (8) | | | 400 | V |
| CDM: charged device model (9) | SOT23-5 | ESD | 1500 | V |
| | SOP-8 | | 1500 | V |
| | TSSOP-14 | | 750 | V |
| | SOP-14 | | 500 | V |
| Latch-up immunity | | | 200 | mA |

Notes:

1. All voltage values, except the differential voltage, are with respect to network ground terminal.
2. Differential voltages are the non-inverting input terminal with respect to the inverting input terminal
3. $V_{CC}$ - $V_{IN}$ must not exceed 6V
4. Input current must be limited by a resistor in series with the inputs
5. Short-circuits can cause excessive heating and destructive dissipation.
6. Rth are typical values
7. Human body model: 100 pF discharged through a 1.5 kΩ resistor between two pins of the device, done for all couples of pin combinations with other pins floating.
8. Machine model: 200 pF charged to the specified voltage, then discharged directly between two pins of the device with no external series resistor (internal resistor < 5 Ω), done for all couples of pin combinations with other pins floating
9. Charged device model: all pins plus packages are charged together to the specified voltage and then discharged directly to the ground.

## 6.Operating conditions

| Parameter | | Symbol | Value | Units |
|---|---|---|---|---|
| Supply voltage | -40°C<$T_{op}$<125°C | $V_{CC}$ | 2.5 to 5.5 | V |
| | 0°C<$T_{op}$<125°C | | 2.3 to 5.5 | V |
| Common mode input voltage range | | $V_{icm}$ | ($V_{CC-}$) - 0.1 to ($V_{CC+}$) + 0.1 | V |
| Operating free air temperature range | | $T_{op}$ | -40 to +125 | °C |

## 7.1 Electrical Characteristics

($V_{CC+}$)=2.5V with ($V_{CC-}$)=0V, $V_{icm}$=$V_{CC}$/2, with $R_L$ connected to $V_{CC}$/2, T=25°C (unless otherwise specified)

| Parameter | Symbol | Conditions | Min | Typ | Max | Units |
|---|---|---|---|---|---|---|
| **DC performance** | | | | | | |
| Offset voltage, TSV91x | $V_{io}$ | $T_{op}$=25 °C | | 0.1 | 4.5 | mV |
| | | $T_{min}$<$T_{op}$<$T_{max}$ | | | 7.5 | mV |
| Offset voltage, TSV91xA | | $T_{op}$=25 °C | | | 1.5 | mV |
| | | $T_{min}$<$T_{op}$<$T_{max}$ | | | 3 | mV |
| Input offset voltage drift | $\Delta V_{io}/\Delta T$ | | | 5 | | μV/°C |
| Input offset current (1) | $I_{io}$ | $T_{op}$=25 °C | | 1 | 10 | pA |
| | | $T_{min}$<$T_{op}$<$T_{max}$ | | | 100 | pA |
| Input bias current (1) | $I_{ib}$ | $T_{op}$=25 °C | | 1 | 10 | pA |
| | | $T_{min}$<$T_{op}$<$T_{max}$ | | | 100 | pA |
| Common mode rejection ratio, 20 log ($\Delta V_{ic}/\Delta V_{io}$) | CMR | 0 V to 2.5V, $V_{out}$=1.25V, $T_{op}$=25°C | 58 | 75 | | dB |
| | | $T_{min}$<$T_{op}$<$T_{max}$ | 53 | | | dB |
| Large signal voltage gain | $A_{vd}$ | $R_L$=10kΩ, $V_{out}$=0.5V to 2V, $T_{op}$=25°C | 80 | 89 | | dB |
| | | $T_{min}$<$T_{op}$<$T_{max}$ | 75 | | | dB |
| High-level output voltage | $V_{CC}$-$V_{OH}$ | $R_L$=10kΩ | | 15 | 40 | mV |
| | | $T_{min}$<$T_{op}$<$T_{max}$ | | | 40 | mV |
| | | $R_L$=600Ω | | 45 | 150 | mV |
| | | $T_{min}$<$T_{op}$<$T_{max}$ | | | 150 | mV |
| Low-level output voltage | $V_{OL}$ | $R_L$=10kΩ | | 15 | 40 | mV |
| | | $T_{min}$<$T_{op}$<$T_{max}$ | | | 40 | mV |
| | | $R_L$=600Ω | | 45 | 150 | mV |
| | | $T_{min}$<$T_{op}$<$T_{max}$ | | | 150 | mV |
| $I_{sink}$ | $I_{OUT}$ | $V_O$=2.5V, $T_{op}$=25°C | 18 | 32 | | mA |
| | | $T_{min}$<$T_{op}$<$T_{max}$ | 16 | | | mA |
| $I_{source}$ | | $V_O$=0V, $T_{op}$=25°C | 18 | 35 | | mA |
| | | $T_{min}$<$T_{op}$<$T_{max}$ | 16 | | | mA |

| Parameter | Symbol | Conditions | Min | Typ | Max | Units |
|---|---|---|---|---|---|---|
| Supply current (per channel) | $I_{CC}$ | No load, $V_{out}=V_{CC}/2$ | | 0.78 | 1.1 | mA |
| | | $T_{min}<T_{op}<T_{max}$ | | | 1.1 | mA |
| **AC performance** | | | | | | |
| Gain bandwidth product | GBP | $R_L$=2kΩ,$C_L$=100pF,f=100kHz,$T_{op}$=25°C | | 8 | | MHz |
| Unity gain frequency | $F_u$ | $R_L$=2kΩ,$C_L$=100pF,$T_{op}$=25°C | | 7.2 | | MHz |
| Phase margin | φm | $R_L$=2kΩ,$C_L$=100pF,$T_{op}$=25°C | | 45 | | Degrees |
| Gain margin | $G_m$ | $R_L$=2kΩ,$C_L$=100pF,$T_{op}$=25°C | | 8 | | dB |
| Slew rate | SR | $R_L$=2kΩ, $C_L$=100pF,$A_V$=1, $T_{op}$=25°C | | 4.5 | | V/μs |
| Equivalent input noise voltage | $e_n$ | f=10kHz, $T_{op}$=25°C | | 21 | | nV/√Hz |
| Total harmonic distortion + noise | THD+$e_n$ | G=1, f=1kHz, $R_L$=2kΩ, BW=22kHz<br>$T_{op}$=25°C, $V_{icm}=(V_{CC}+1)/2$,$V_{out}$=1.1$V_{pp}$ | | 0.001 | | % |

## 7.2 Electrical Characteristics

($V_{CC+}$)=3.3V with ($V_{CC-}$)=0V, $V_{icm}$=$V_{CC}$/2, with $R_L$ connected to $V_{CC}$/2, T=25°C (unless otherwise specified)

| Parameter | Symbol | Conditions | Min | Typ | Max | Units |
|---|---|---|---|---|---|---|
| **DC performance** | | | | | | |
| Offset voltage, TSV91x | $V_{io}$ | $T_{op}$=25 °C | | 0.1 | 4.5 | mV |
| | | $T_{min}$<$T_{op}$<$T_{max}$ | | | 7.5 | mV |
| Offset voltage, TSV91xA | | $T_{op}$=25 °C | | | 1.5 | mV |
| | | $T_{min}$<$T_{op}$<$T_{max}$ | | | 3 | mV |
| Input offset voltage drift | $\Delta V_{io}/\Delta T$ | | | 5 | | μV/°C |
| Input offset current (1) | $I_{io}$ | $T_{op}$=25 °C | | 1 | 10 | pA |
| | | $T_{min}$<$T_{op}$<$T_{max}$ | | | 100 | pA |
| Input bias current (1) | $I_{ib}$ | $T_{op}$=25 °C | | 1 | 10 | pA |
| | | $T_{min}$<$T_{op}$<$T_{max}$ | | | 100 | pA |
| Common mode rejection ratio, 20 log ($\Delta V_{ic}/\Delta V_{io}$) | CMR | 0 V to 3.3V, $V_{out}$=1.65V, $T_{op}$=25°C | 60 | 78 | | dB |
| | | $T_{min}$<$T_{op}$<$T_{max}$ | 55 | | | dB |
| Large signal voltage gain | $A_{vd}$ | $R_L$=10kΩ,$V_{out}$=0.5V to 2.8V,$T_{op}$=25°C | 80 | 89 | | dB |
| | | $T_{min}$<$T_{op}$<$T_{max}$ | 75 | | | dB |
| High-level output voltage | $V_{CC}$-$V_{OH}$ | $R_L$=10kΩ | | 15 | 40 | mV |
| | | $T_{min}$<$T_{op}$<$T_{max}$ | | | 40 | mV |
| | | $R_L$=600Ω | | 45 | 150 | mV |
| | | $T_{min}$<$T_{op}$<$T_{max}$ | | | 150 | mV |
| Low-level output voltage | $V_{OL}$ | $R_L$=10kΩ | | 15 | 40 | mV |
| | | $T_{min}$<$T_{op}$<$T_{max}$ | | | 40 | mV |
| | | $R_L$=600Ω | | 45 | 150 | mV |
| | | $T_{min}$<$T_{op}$<$T_{max}$ | | | 150 | mV |
| $I_{sink}$ | $I_{OUT}$ | $V_O$=3.3V, $T_{op}$=25°C | 18 | 32 | | mA |
| | | $T_{min}$<$T_{op}$<$T_{max}$ | 16 | | | mA |
| $I_{source}$ | | $V_O$=0V, $T_{op}$=25°C | 18 | 35 | | mA |
| | | $T_{min}$<$T_{op}$<$T_{max}$ | 16 | | | mA |

| Parameter | Symbol | Conditions | Min | Typ | Max | Units |
|---|---|---|---|---|---|---|
| Supply current (per channel) | $I_{CC}$ | No load, $V_{out}=V_{CC}/2$ | | 0.8 | 1.1 | mA |
| | | $T_{min}<T_{op}<T_{max}$ | | | 1.1 | mA |
| **AC performance** | | | | | | |
| Gain bandwidth product | GBP | $R_L$=2kΩ,$C_L$=100pF,f=100kHz,$T_{op}$=25°C | | 8 | | MHz |
| Unity gain frequency | $F_u$ | $R_L$=2kΩ, $C_L$=100pF, $T_{op}$=25°C | | 7.2 | | MHz |
| Phase margin | φm | $R_L$=2kΩ, $C_L$=100pF, $T_{op}$=25°C | | 45 | | Degrees |
| Gain margin | $G_m$ | $R_L$=2kΩ, $C_L$=100pF, $T_{op}$=25°C | | 8 | | dB |
| Slew rate | SR | $R_L$=2kΩ, $C_L$=100pF, $A_V$=1, $T_{op}$=25°C | | 4.5 | | V/μs |
| Equivalent input noise voltage | $e_n$ | f=10kHz, $T_{op}$=25°C | | 21 | | nV/√Hz |
| Total harmonic distortion + noise | THD+$e_n$ | G=1, f=1kHz, $R_L$=2kΩ, BW=22kHz<br>$T_{op}$=25°C, $V_{icm}=(V_{CC}+1)/2$,$V_{out}$=1.9$V_{pp}$ | | 0.0007 | | % |

## 7.3 Electrical Characteristics

($V_{CC+}$)=5V with ($V_{CC-}$)=0V, $V_{icm}$=$V_{CC}$/2, with $R_L$ connected to $V_{CC}$/2, T=25°C (unless otherwise specified)

| Parameter | Symbol | Conditions | Min | Typ | Max | Units |
|---|---|---|---|---|---|---|
| **DC performance** | | | | | | |
| Offset voltage, TSV91x | $V_{io}$ | $T_{op}$=25 °C | | 0.1 | 4.5 | mV |
| | | $T_{min}$<$T_{op}$<$T_{max}$ | | | 7.5 | mV |
| Offset voltage, TSV91xA | | $T_{op}$=25 °C | | | 1.5 | mV |
| | | $T_{min}$<$T_{op}$<$T_{max}$ | | | 3 | mV |
| Input offset voltage drift | $\Delta V_{io}/\Delta T$ | | | 5 | | μV/°C |
| Input offset current (1) | $I_{io}$ | $T_{op}$=25 °C | | 1 | 10 | pA |
| | | $T_{min}$<$T_{op}$<$T_{max}$ | | | 100 | pA |
| Input bias current (1) | $I_{ib}$ | $T_{op}$=25 °C | | 1 | 10 | pA |
| | | $T_{min}$<$T_{op}$<$T_{max}$ | | | 100 | pA |
| Common mode rejection ratio, 20 log ($\Delta V_{ic}/\Delta V_{io}$) | CMR | 0 V to 5V, $V_{out}$=2.5V, $T_{op}$=25°C | 62 | 82 | | dB |
| | | $T_{min}$<$T_{op}$<$T_{max}$ | 58 | | | dB |
| Supply voltage rejection ratio 20 log ($\Delta V_{CC}/\Delta V_{io}$) | SVR | $V_{CC}$=2.5 to 5V | 70 | 86 | | dB |
| Large signal voltage gain | $A_{vd}$ | $R_L$=10kΩ,$V_{out}$=0.5V to 4.5V,$T_{op}$=25°C | 80 | 91 | | dB |
| | | $T_{min}$<$T_{op}$<$T_{max}$ | 75 | | | dB |
| High-level output voltage | $V_{CC}$-$V_{OH}$ | $R_L$=10kΩ | | 15 | 40 | mV |
| | | $T_{min}$<$T_{op}$<$T_{max}$ | | | 40 | mV |
| | | $R_L$=600Ω | | 45 | 150 | mV |
| | | $T_{min}$<$T_{op}$<$T_{max}$ | | | 150 | mV |
| Low-level output voltage | $V_{OL}$ | $R_L$=10kΩ | | 15 | 40 | mV |
| | | $T_{min}$<$T_{op}$<$T_{max}$ | | | 40 | mV |
| | | $R_L$=600Ω | | 45 | 150 | mV |
| | | $T_{min}$<$T_{op}$<$T_{max}$ | | | 150 | mV |

| Parameter | Symbol | Conditions | Min | Typ | Max | Units |
|---|---|---|---|---|---|---|
| $I_{sink}$ | $I_{OUT}$ | $V_O$=5V, $T_{op}$=25°C | 18 | 32 | | mA |
| | | $T_{min}$<$T_{op}$<$T_{max}$ | 16 | | | mA |
| $I_{source}$ | | $V_O$=0V, $T_{op}$=25°C | 18 | 35 | | mA |
| | | $T_{min}$<$T_{op}$<$T_{max}$ | 16 | | | mA |
| Supply current (per channel) | $I_{CC}$ | No load, $V_{out}$=2.5V | | 0.78 | 1.1 | mA |
| | | $T_{min}$<$T_{op}$<$T_{max}$ | | | 1.1 | mA |
| **AC performance** | | | | | | |
| Gain bandwidth product | GBP | $R_L$=2kΩ,$C_L$=100pF,f=100kHz,$T_{op}$=25°C | | 8 | | MHz |
| Unity gain frequency | $F_u$ | $R_L$=2kΩ, $C_L$=100pF, $T_{op}$=25°C | | 7.5 | | MHz |
| Phase margin | φm | $R_L$=2kΩ, $C_L$=100pF, $T_{op}$=25°C | | 45 | | Degrees |
| Gain margin | $G_m$ | $R_L$=2kΩ, $C_L$=100pF, $T_{op}$=25°C | | 8 | | dB |
| Slew rate | SR | $R_L$=2kΩ, $C_L$=100pF, $A_V$=1, $T_{op}$=25°C | | 4.5 | | V/μs |
| Equivalent input noise voltage | $e_n$ | f=1kHz, $T_{op}$=25°C | | 27 | | nV/√Hz |
| | | f=10kHz, $T_{op}$=25°C | | 21 | | nV/√Hz |
| Total harmonic distortion | THD+$e_n$ | G=1, f=1kHz, $R_L$=2kΩ, BW=22kHz<br>$T_{op}$=25°C, $V_{icm}$=($V_{CC}$+1)/2,$V_{out}$=3.6$V_{pp}$ | | 0.0004 | | % |

## 8.1 Typical characteristic

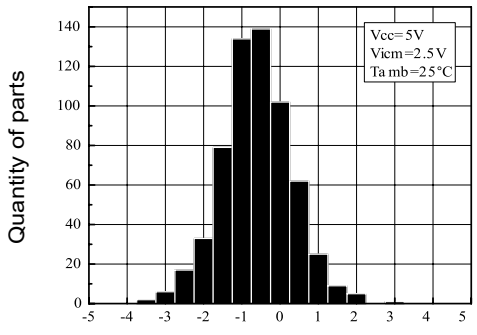


Figure 1: Input offset voltage distribution at T=25°C

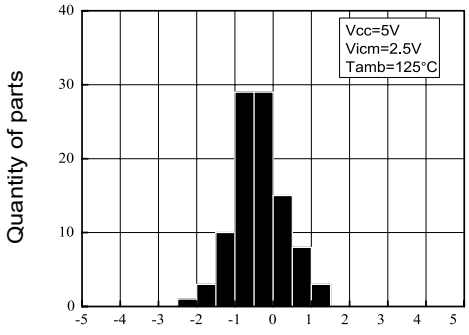


Figure 2: Input offset voltage distribution at T=125°C

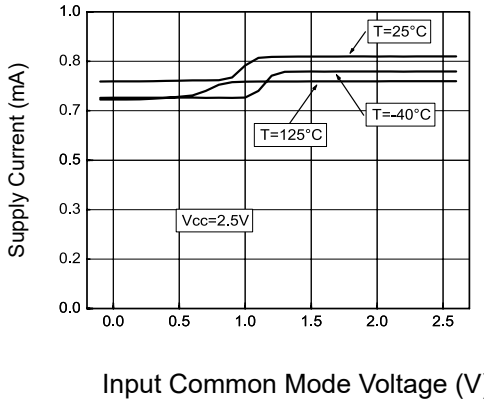


Figure 3: Supply current vs. input common-mode voltage at $V_{CC}$=2.5V

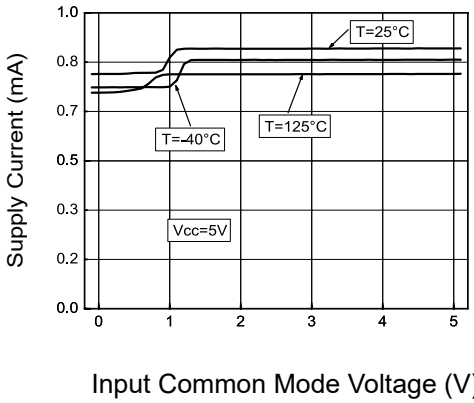


Figure 4: Supply current vs. input common-mode voltage at $V_{CC}$=5V

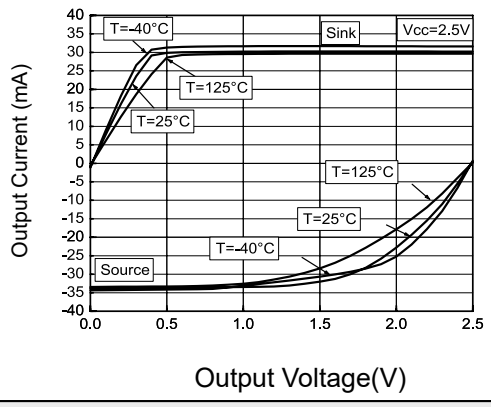


Figure 5: Output current vs. output voltage at $V_{CC}$=2.5V

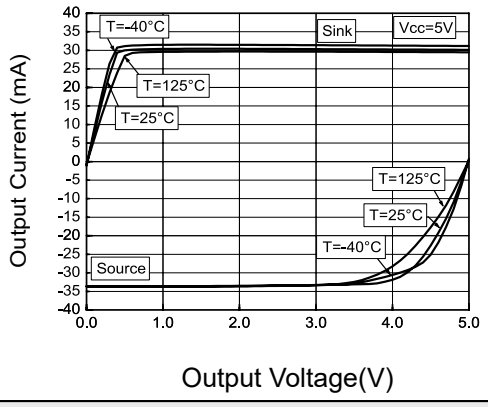


Figure 6: Output current vs. output voltage at $V_{CC}$=5V

## 8.2 Typical characteristic

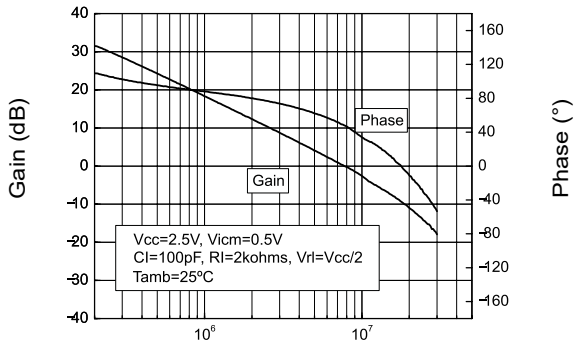


Figure 7: Voltage gain and phase vs. frequency at $V_{CC}$=2.5V and $V_{icm}$=0.5V

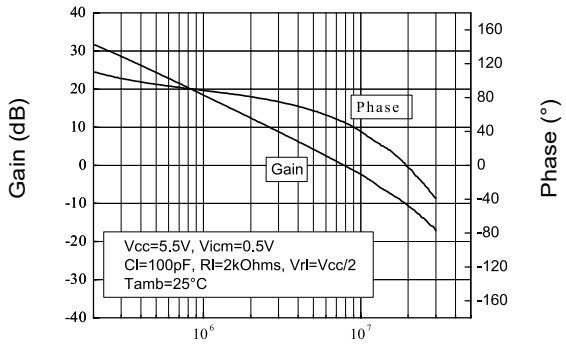


Figure 8: Voltage gain and phase vs. frequency at $V_{CC}$=5.5V and $V_{icm}$=0.5V

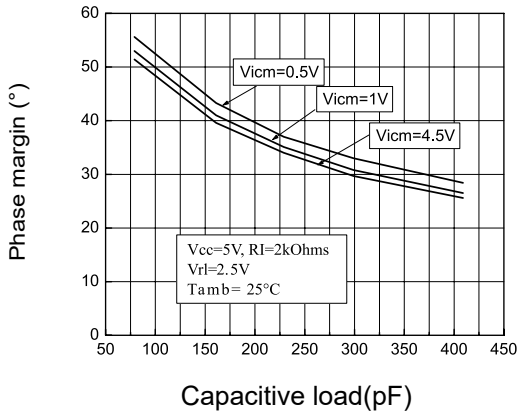


Figure 9: Phase margin vs. capacitive load

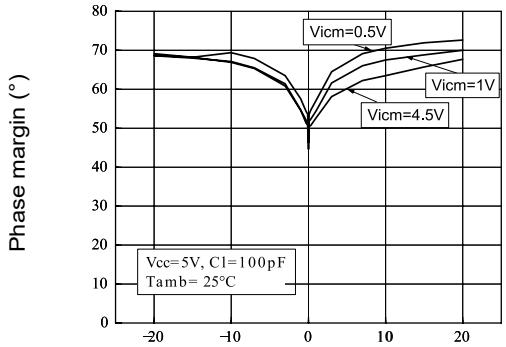


Figure 10: Phase margin vs. output current

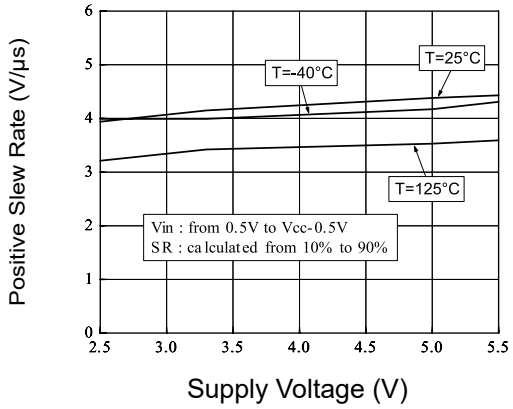


Figure 11: Positive slew rate

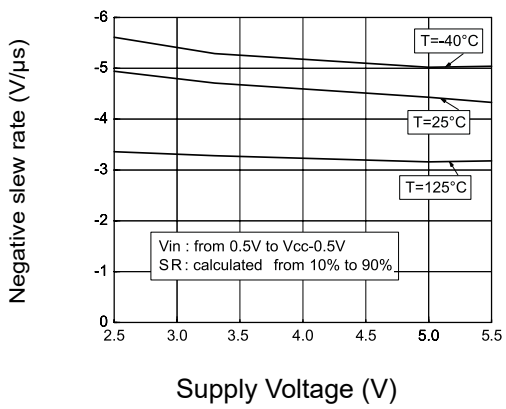


Figure 12: Positive slew rate

## 8.3 Typical characteristic

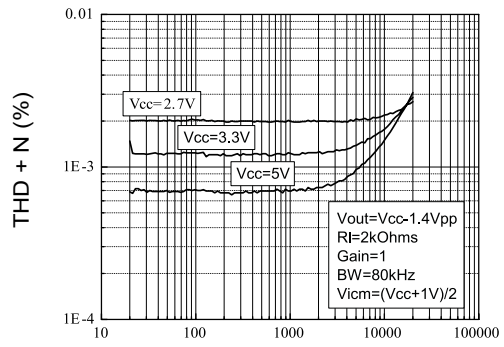


Figure 13: Distortion + noise vs. frequency

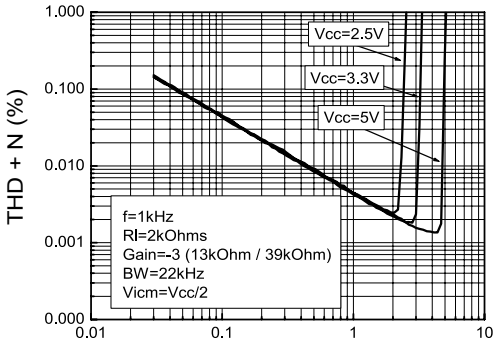


Figure 14: Distortion + noise vs. output voltage

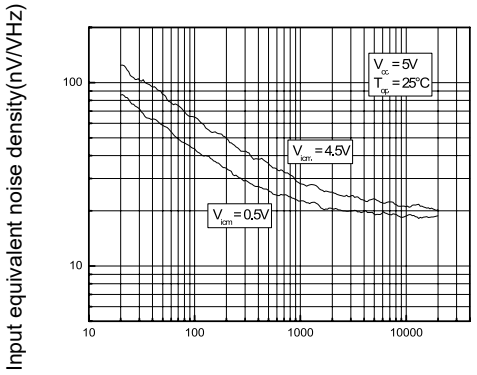


Figure 15: Noise vs. frequency

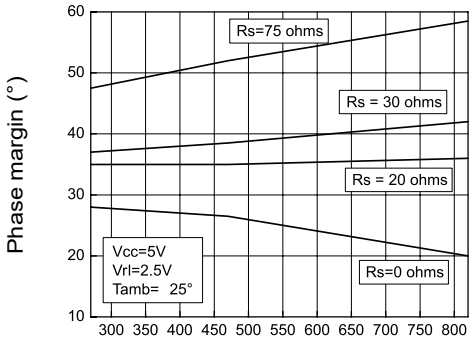


Figure 16: Phase margin vs. capacitive load and serial resistor

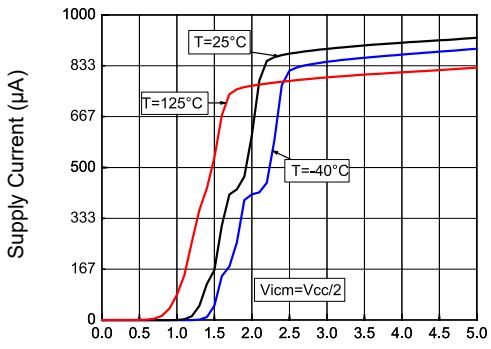


Figure 17: Supply current vs. supply voltage

## 9.1 SOP-8 Package Outline Dimensions

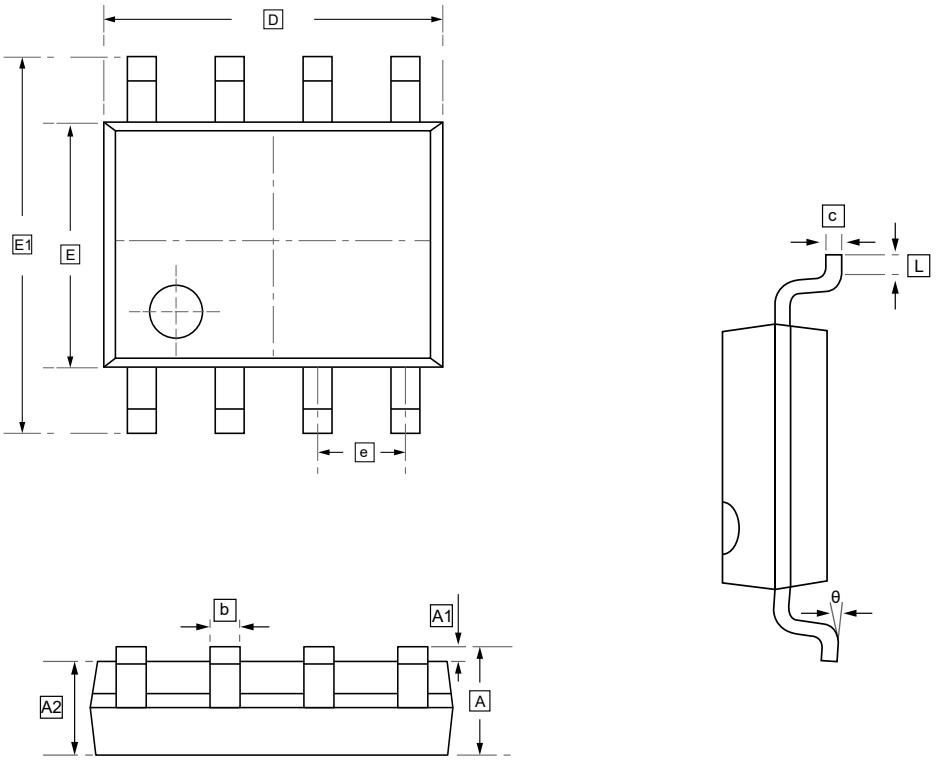


**DIMENSIONS (mm are the original dimensions)**

| Symbol | A | A1 | A2 | b | c | D | E | E1 | e | L | θ |
|---|---|---|---|---|---|---|---|---|---|---|---|
| **Min** | 1.350 | 0.000 | 1.350 | 0.330 | 0.170 | 4.700 | 3.800 | 5.800 | 1.270 | 0.400 | 0° |
| **Max** | 1.750 | 0.100 | 1.550 | 0.510 | 0.250 | 5.100 | 4.000 | 6.200 | BSC | 1.270 | 8° |

## 9.2 TSSOP-14 Package Outline Dimensions

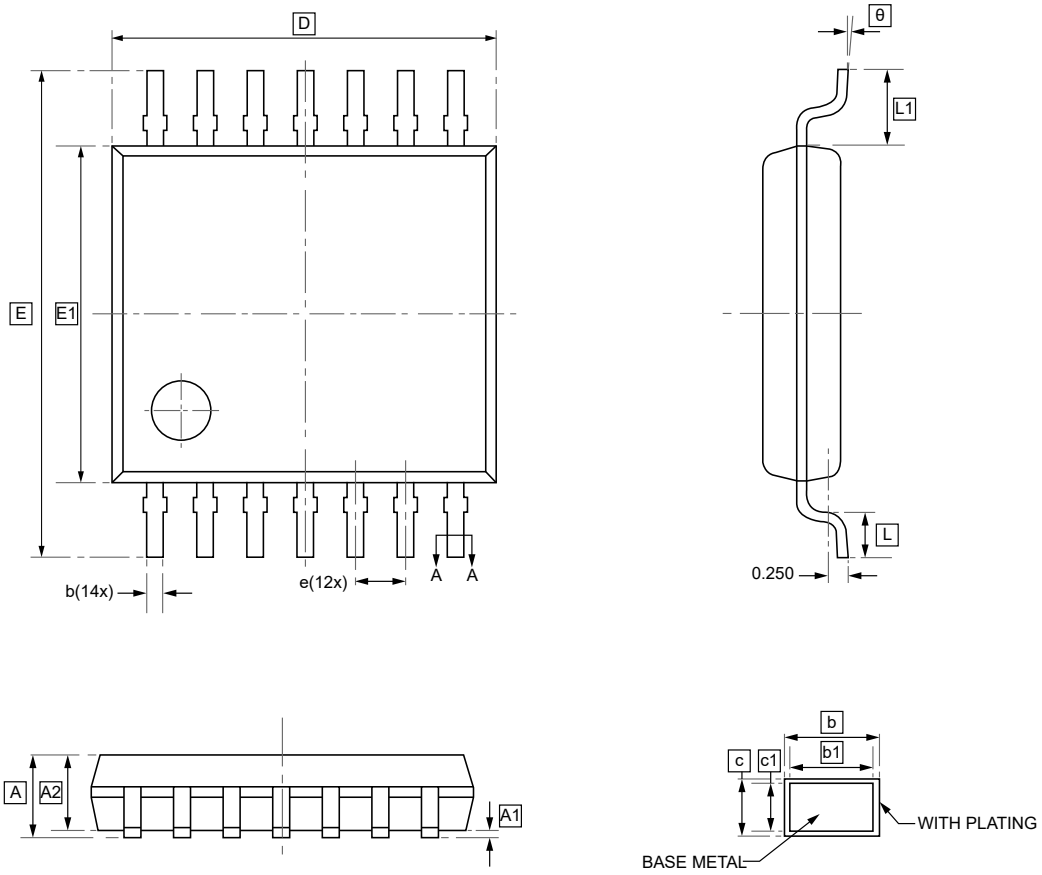


**DIMENSIONS (mm are the original dimensions)**

| Symbol | A | A1 | A2 | b | b1 | c | c1 | D | E | E1 | e | L1 |
|---|---|---|---|---|---|---|---|---|---|---|---|---|
| Min | - | 0.05 | 0.90 | 0.20 | 0.19 | 0.13 | 0.120 | 4.90 | 6.20 | 4.30 | 0.65 | 0.85 |
| Max | 1.20 | 0.15 | 1.05 | 0.28 | 0.25 | 0.17 | 0.14 | 5.10 | 6.60 | 4.50 | BSC | 1.15 |

| Symbol | L | θ |
|---|---|---|
| Min | 0.45 | 0° |
| Max | 0.75 | 8° |

## 9.3 SOT-23-5 Package Outline Dimensions

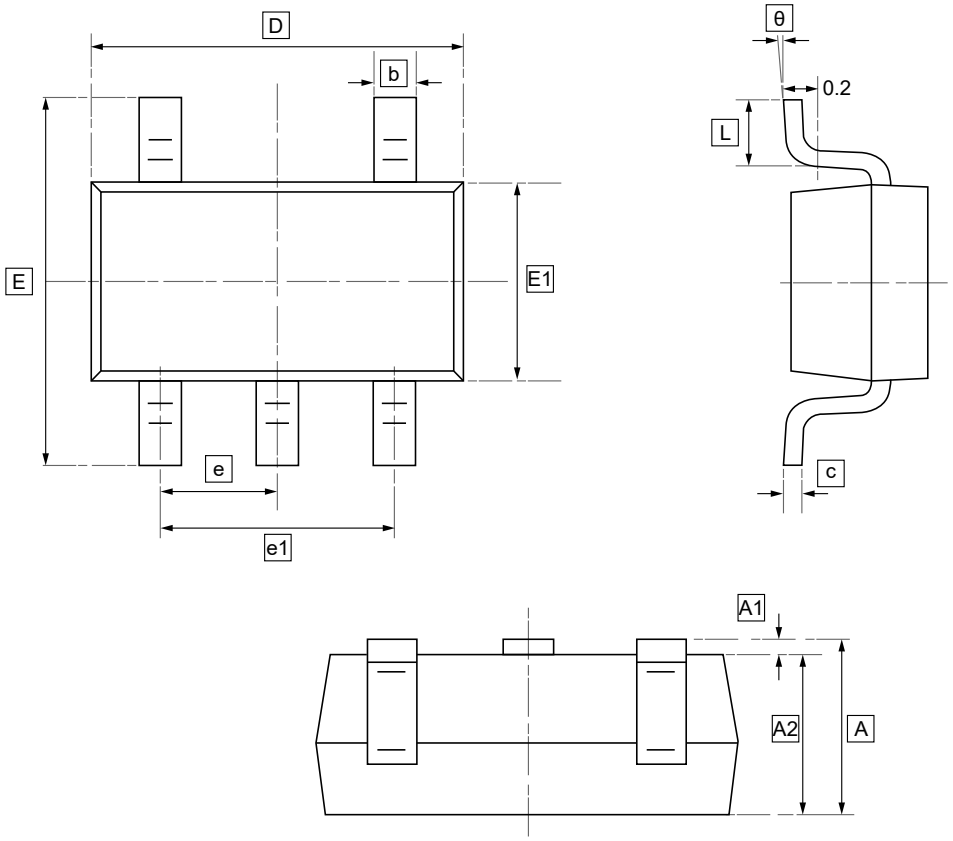


**DIMENSIONS (mm are the original dimensions)**

| Symbol | A | A1 | A2 | b | c | D | E1 | E | e | e1 | L | θ |
|---|---|---|---|---|---|---|---|---|---|---|---|---|
| **Min** | 1.050 | 0.000 | 1.050 | 0.300 | 0.100 | 2.820 | 1.500 | 2.650 | 0.950 | 1.800 | 0.300 | 0° |
| **Max** | 1.250 | 0.100 | 1.150 | 0.500 | 0.200 | 3.020 | 1.700 | 2.950 | BSC | 2.000 | 0.600 | 8° |

## 9.4 SOP-14 Package Outline Dimensions

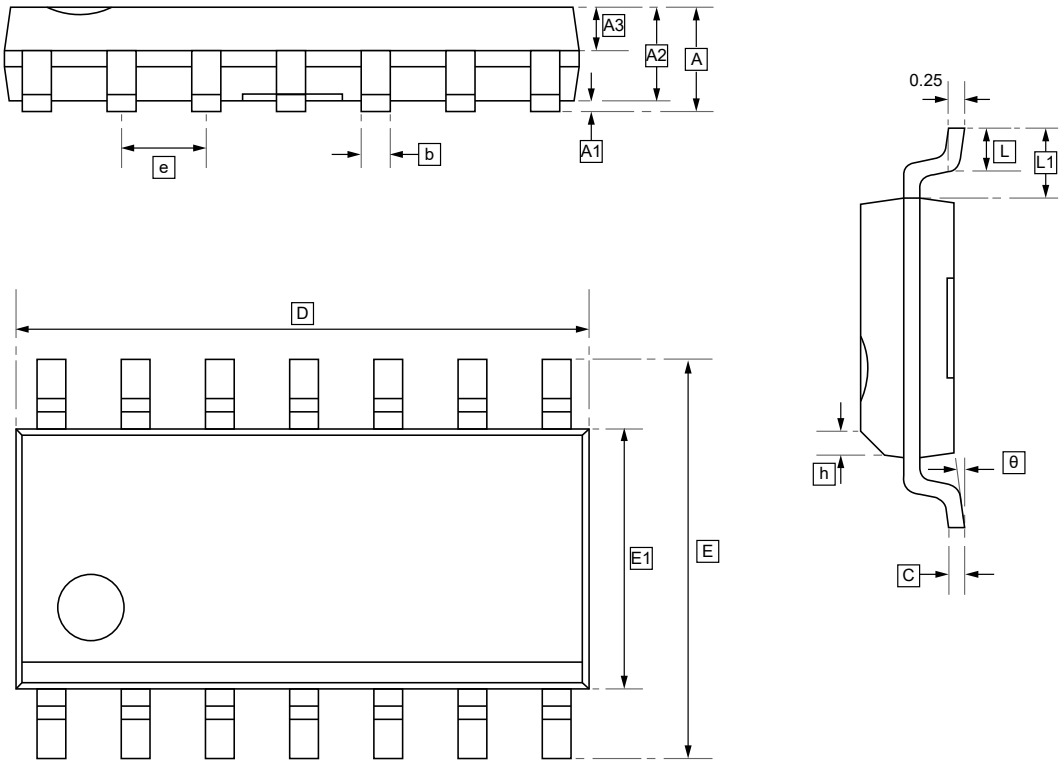


**DIMENSIONS (mm are the original dimensions)**

| Symbol | A | A1 | A2 | A3 | b | C | D | E | E1 | e | h | L |
|---|---|---|---|---|---|---|---|---|---|---|---|---|
| Min | - | 0.05 | 1.35 | 0.65 | 0.203 | 0.17 | 8.45 | 5.80 | 3.80 | 1.24 | 0.25 | 0.40 |
| Max | 1.75 | 0.25 | 1.55 | 0.75 | 0.305 | 0.25 | 8.85 | 6.20 | 4.00 | 1.30 | 0.50 | 0.80 |

| Symbol | L1 | θ |
|---|---|---|
| Min | 1.00 | 0° |
| Max | 1.10 | 8° |

## 10.Ordering information

SOT23-5

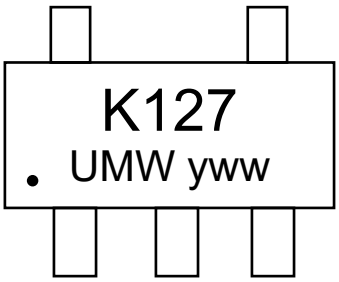


SOP-8

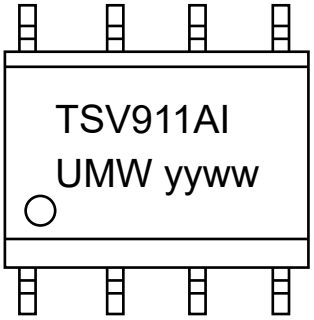


SOP-14

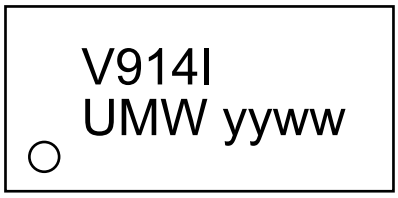


TSSOP-14

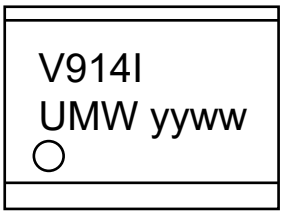


y: Year Code
yy: Year Code
ww: Week Code

| Order Code | Marking | Package | Base QTY | Delivery Mode |
|---|---|---|---|---|
| UMW TSV911AILT | K128 | SOT23-5 | 3000 | Tape and reel |
| UMW TSV911ILT | K127 | SOT23-5 | 3000 | Tape and reel |
| UMW TSV911AIYDT | TSV911AI | SOP-8 | 2500 | Tape and reel |
| UMW TSV911IYDT | TSV911 | SOP-8 | 2500 | Tape and reel |
| UMW TSV912IDT | V912I | SOP-8 | 2500 | Tape and reel |
| UMW TSV914IDT | V914I | SOP-14 | 2500 | Tape and reel |
| UMW TSV914IPT | V914I | TSSOP-14 | 4000 | Tape and reel |

## 11.Disclaimer

UMW reserves the right to make changes to all products, specifications. Customers should obtain the latest version of product documentation and verify the completeness and currency of the information before placing an order.

When applying our products, please do not exceed the maximum rated values, as this may affect the reliability of the entire system. Under certain conditions, any semiconductor product may experience faults or failures. Buyers are responsible for adhering to safety standards and implementing safety measures during system design, prototyping, and manufacturing when using our products to prevent potential failure risks that could lead to personal injury or property damage.

Unless explicitly stated in writing, UMW products are not intended for use in medical, life-saving, or life-sustaining applications, nor for any other applications where product failure could result in personal injury or death. If customers use or sell the product for such applications without explicit authorization, they assume all associated risks.

When reselling, applying, or exporting, please comply with export control laws and regulations of China, the United States, the United Kingdom, the European Union, and other relevant countries, regions, and international organizations.

This document and any actions by UMW do not grant any intellectual property rights, whether express or implied, by estoppel or otherwise. The product names and marks mentioned herein may be trademarks of their respective owners.