UMW 78Dxx

1.Description

The 78DXX three-terminal positive regulators are available in the TO-252 package with several fixed output voltages making it useful in a wide range of applications.

2.Features

- Output Current up to 1A
- Output Voltages of 5,6,8,9,12,15,18,24V
- Thermal Overload Protection Short Circuit Protection
- Output Transistor Safe Operating area (SOA) Protection

3.Pinning information

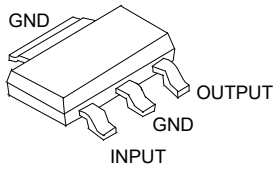

SOT-223

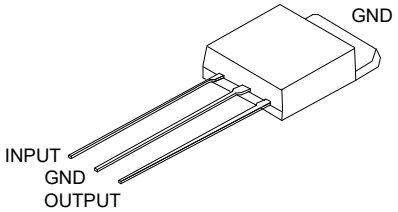

TO-251

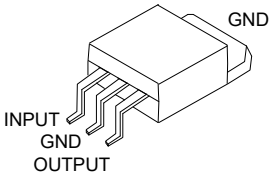

TO-252-3

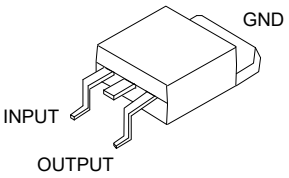

TO-252

4.Internal Block Digram

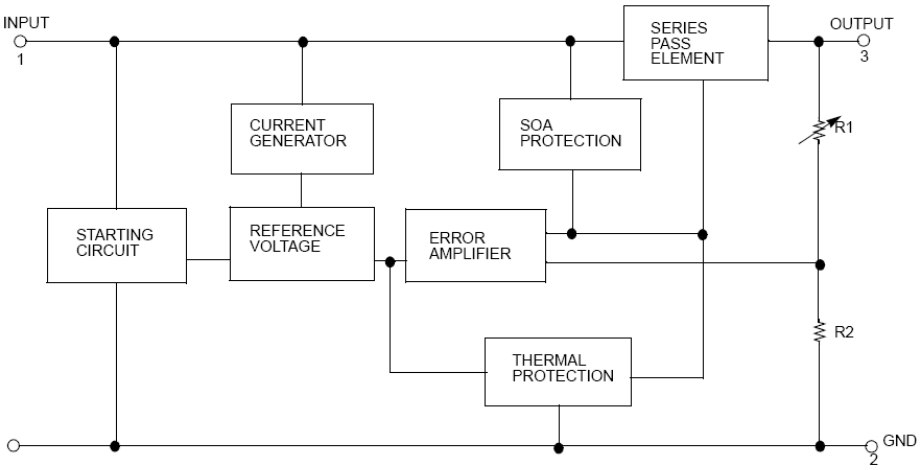

5.Absolute Maximum Rating

Parameter		Symbol	Value	Units
DC Input Voltage	for V_O=5 to 18 V	V_I	35	V
	for V_O=20, 24V		40	V
Output Current		I_{OUT}	1	A
Power Dissipation (T_C=25°C)	SOT-223	P_D	8.3	W
	TO-251/TO-252		10	
	TO-252-3			
Junction Temperature		T_J	-55 to 150	°C
Storage Temperature		T_{STG}	-40 to 120	°C

6.Thermal Data

Parameter		Symbol	Value	Units
Junction to Case	SOT-223	θ_{JC}	15	°C/W
	TO-251/TO-252		12.5	
	TO-252-3			

7.1Electrical Characteristics (78D05)

(Refer to the test circuits, 25°C, I_O=350mA, V_I=10V, unless otherwise specified, C_I=0.33μF, C_O=0.1μF)

Parameter	Symbol	Conditions		Min	Typ	Max	Units
Output Voltage	V_O	25°C		4.8	5	5.2	V
		I_O=5mA~1A, V_I=7~20V		4.75	5	5.25	V
Line Regulation(Note)	ΔV_O	I_O=200mA	V_I=7V~25V			100	mV
		T_J=25°C	V_I=8V~25V			50	mV
Load Regulation(Note)	ΔV_O	T_J=25°C	I_O=5mA~500mA			100	mV
			I_O=5mA~200mA			50	mV
Quiescent Current	I_Q	T_J=25°C				8	mA
Quiescent Current Change	ΔI_Q	I_O=5mA~350mA				0.5	mA
		I_O=200mA, V_I=8~25V				0.8	mA
Output Voltage Drift	$\Delta V/\Delta T$	I_O=5mA, T_J=0~125°C			-0.5		mV/°C
Output Noise Voltage	V_N	f=10Hz~100KHz			40		μV
Ripple Rejection	RR	f=120Hz, V_I=8~18V			80		dB
Dropout Voltage	V_D	T_J=25°C, I_O=500mA			2		V
Short Circuit Current	I_{SC}	T_J=25°C, V_I=35V			800		mA
Peak Current	I_{PK}	T_J=25°C			1300		mA

Notes:

Load and line regulation are specified at constant junction temperature. Change in Vo due to heating effects must be taken into account separately. Pulse testing with low duty is used.

7.2Electrical Characteristics (78D06)

(Refer to the test circuits, 25°C,I_O=350mA, V_I=11V, unless otherwise specified, C_I=0.33μF, C_O=0.1μF)

Parameter	Symbol	Conditions		Min	Typ	Max	Units
Output Voltage	V_O	25°C		5.76	6	6.24	V
		I_O=5mA~1A, V_I=8~21V		5.7	6	6.3	V
Line Regulation(Note)	ΔV_O	I_O=200mA	V_I=8V~25V			100	mV
		T_J=25°C	V_I=9V~25V			50	mV
Load Regulation(Note)	ΔV_O	T_J=25°C	I_O=5mA~500mA			120	mV
			I_O=5mA~200mA			60	mV
Quiescent Current	I_Q	T_J=25°C				8	mA
Quiescent Current Change	ΔI_Q	I_O=5mA~350mA				0.5	mA
		I_O=200mA, V_I=9~25V				0.8	mA
Output Voltage Drift	$\Delta V/\Delta T$	I_O=5mA, T_J=0~125°C			-0.5		mV/°C
Output Noise Voltage	V_N	f=10Hz~100KHz			45		μV
Ripple Rejection	RR	f=120Hz, V_I=9~19V			80		dB
Dropout Voltage	V_D	T_J=25°C, I_O=500mA			2		V
Short Circuit Current	I_{SC}	T_J=25°C, V_I=35V			800		mA
Peak Current	I_{PK}	T_J=25°C			1300		mA

Notes:

Load and line regulation are specified at constant junction temperature. Change in Vo due to heating effects must be taken into account separately. Pulse testing with low duty is used.

7.3Electrical Characteristics (78D08)

(Refer to the test circuits, 25°C,I_O=350mA, V_I=14V, unless otherwise specified, C_I=0.33μF, C_O=0.1μF)

Parameter	Symbol	Conditions		Min	Typ	Max	Units
Output Voltage	V_O	25°C		7.68	8	8.32	V
		I_O=5mA~1A, V_I=10.5~23V		7.6	8	8.4	V
Line Regulation(Note)	ΔV_O	I_O=200mA	V_I=10.5V~25V			100	mV
		T_J=25°C	V_I=11V~25V			50	mV
Load Regulation(Note)	ΔV_O	T_J=25°C	I_O=5mA~500mA			160	mV
			I_O=5mA~200mA			80	mV
Quiescent Current	I_Q	T_J=25°C				8	mA
Quiescent Current Change	ΔI_Q	I_O=5mA~350mA				0.5	mA
		I_O=200mA, V_I=10.5~25V				0.8	mA
Output Voltage Drift	$\Delta V/\Delta T$	I_O=5mA, T_J=0~125°C			-0.8		mV/°C
Output Noise Voltage	V_N	f=10Hz~100KHz			52		μV
Ripple Rejection	RR	f=120Hz, V_I=11.5~21.5V			80		dB
Dropout Voltage	V_D	T_J=25°C, I_O=500mA			2		V
Short Circuit Current	I_{SC}	T_J=25°C, V_I=35V			800		mA
Peak Current	I_{PK}	T_J=25°C			1300		mA

Notes:

Load and line regulation are specified at constant junction temperature. Change in Vo due to heating effects must be taken into account separately. Pulse testing with low duty is used.

7.4Electrical Characteristics (78D09)

(Refer to the test circuits, 25°C,I_O=350mA, V_I=15V, unless otherwise specified, C_I=0.33μF, C_O=0.1μF)

Parameter	Symbol	Conditions		Min	Typ	Max	Units
Output Voltage	V_O	25°C		8.64	9	9.36	V
		I_O=5mA~1A, V_I=11.5~24V		8.45	9	9.55	V
Line Regulation(Note)	ΔV_O	I_O=200mA	V_I=11.5V~25V			100	mV
		T_J=25°C	V_I=12V~25V			50	mV
Load Regulation(Note)	ΔV_O	T_J=25°C	I_O=5mA~500mA			180	mV
			I_O=5mA~200mA			90	mV
Quiescent Current	I_Q	T_J=25°C				8	mA
Quiescent Current Change	ΔI_Q	I_O=5mA~350mA				0.5	mA
		I_O=200mA, V_I=11.5~25V				0.8	mA
Output Voltage Drift	ΔV/ΔT	I_O=5mA, T_J=0~125°C			-0.8		mV/°C
Output Noise Voltage	V_N	f=10Hz~100KHz			52		μV
Ripple Rejection	RR	f=120Hz, V_I=12.5~22.5V			80		dB
Dropout Voltage	V_D	T_J=25°C, I_O=500mA			2		V
Short Circuit Current	I_{SC}	T_J=25°C, V_I=35V			800		mA
Peak Current	I_{PK}	T_J=25°C			1300		mA

Notes:

Load and line regulation are specified at constant junction temperature. Change in Vo due to heating effects must be taken into account separately. Pulse testing with low duty is used.

7.5Electrical Characteristics (78D12)

(Refer to the test circuits, 25°C,I_O=350mA, V_I=19V, unless otherwise specified, C_I=0.33μF, C_O=0.1μF)

Parameter	Symbol	Conditions		Min	Typ	Max	Units
Output Voltage	V_O	25°C		11.52	12	12.48	V
		I_O=5mA~1A, V_I=14.5~27V		11.4	12	12.6	V
Line Regulation(Note)	ΔV_O	I_O=200mA	V_I=14.5V~30V			100	mV
		T_J=25°C	V_I=16V~30V			50	mV
Load Regulation(Note)	ΔV_O	T_J=25°C	I_O=5mA~500mA			240	mV
			I_O=5mA~200mA			120	mV
Quiescent Current	I_Q	T_J=25°C				8	mA
Quiescent Current Change	ΔI_Q	I_O=5mA~350mA				0.5	mA
		I_O=200mA, V_I=14.5~30V				0.8	mA
Output Voltage Drift	$\Delta V/\Delta T$	I_O=5mA, T_J=0~125°C			-0.8		mV/°C
Output Noise Voltage	V_N	f=10Hz~100KHz			75		μV
Ripple Rejection	RR	f=120Hz, V_I=15~25V			80		dB
Dropout Voltage	V_D	T_J=25°C, I_O=500mA			2		V
Short Circuit Current	I_{SC}	T_J=25°C, V_I=35V			800		mA
Peak Current	I_{PK}	T_J=25°C			1300		mA

Notes:

Load and line regulation are specified at constant junction temperature. Change in Vo due to heating effects must be taken into account separately. Pulse testing with low duty is used.

7.6Electrical Characteristics (78D15)

(Refer to the test circuits, 25°C,I_O=350mA, V_I=23V, unless otherwise specified, C_I=0.33μF, C_O=0.1μF)

Parameter	Symbol	Conditions		Min	Typ	Max	Units
Output Voltage	V_O	25°C		14.4	15	15.6	V
		I_O=5mA~1A, V_I=17.5~30V		14.25	15	15.75	V
Line Regulation(Note)	ΔV_O	I_O=200mA	V_I=17.5V~30V			100	mV
		T_J=25°C	V_I=20V~30V			50	mV
Load Regulation(Note)	ΔV_O	T_J=25°C	I_O=5mA~500mA			300	mV
			I_O=5mA~200mA			150	mV
Quiescent Current	I_Q	T_J=25°C				8	mA
Quiescent Current Change	ΔI_Q	I_O=5mA~350mA				0.5	mA
		I_O=200mA, V_I=17.5~30V				0.8	mA
Output Voltage Drift	ΔV/ΔT	I_O=5mA, T_J=0~125°C			-1		mV/°C
Output Noise Voltage	V_N	f=10Hz~100KHz			100		μV
Ripple Rejection	RR	f=120Hz, V_I=18.5~28.5V			70		dB
Dropout Voltage	V_D	T_J=25°C, I_O=500mA			2		V
Short Circuit Current	I_{SC}	T_J=25°C, V_I=35V			800		mA
Peak Current	I_{PK}	T_J=25°C			1300		mA

Notes:

Load and line regulation are specified at constant junction temperature. Change in Vo due to heating effects must be taken into account separately. Pulse testing with low duty is used.

7.7Electrical Characteristics (78D18)

(Refer to the test circuits, 25°C,I_O=350mA, V_I=26V, unless otherwise specified, C_I=0.33μF, C_O=0.1μF)

Parameter	Symbol	Conditions		Min	Typ	Max	Units
Output Voltage	V_O	25°C		17.28	18	18.72	V
		I_O=5mA~1A, V_I=20.5~33V		17.1	18	18.9	V
Line Regulation(Note)	ΔV_O	I_O=200mA	V_I=21V~33V			100	mV
		T_J=25°C	V_I=24V~33V			50	mV
Load Regulation(Note)	ΔV_O	T_J=25°C	I_O=5mA~500mA			360	mV
			I_O=5mA~200mA			180	mV
Quiescent Current	I_Q	T_J=25°C				8	mA
Quiescent Current Change	ΔI_Q	I_O=5mA~350mA				0.5	mA
		I_O=200mA, V_I=21~33V				0.8	mA
Output Voltage Drift	ΔV/ΔT	I_O=5mA, T_J=0~125°C			-1.2		mV/°C
Output Noise Voltage	V_N	f=10Hz~100KHz			100		μV
Ripple Rejection	RR	f=120Hz, V_I=22~32V			70		dB
Dropout Voltage	V_D	T_J=25°C, I_O=500mA			2		V
Short Circuit Current	I_{SC}	T_J=25°C, V_I=35V			800		mA
Peak Current	I_{PK}	T_J=25°C			1300		mA

Notes:

Load and line regulation are specified at constant junction temperature. Change in Vo due to heating effects must be taken into account separately. Pulse testing with low duty is used.

7.8Electrical Characteristics (78D24)

(Refer to the test circuits, 25°C,I_O=350mA, V_I=33V, unless otherwise specified, C_I=0.33μF, C_O=0.1μF)

Parameter	Symbol	Conditions		Min	Typ	Max	Units
Output Voltage	V_O	25°C		23.04	24	24.96	V
		I_O=5mA~1A, V_I=27~35V		22.8	24	25.2	V
Line Regulation(Note)	ΔV_O	I_O=200mA	V_I=27V~35V			100	mV
		T_J=25°C	V_I=28V~35V			50	mV
Load Regulation(Note)	ΔV_O	T_J=25°C	I_O=5mA~500mA			480	mV
			I_O=5mA~200mA			240	mV
Quiescent Current	I_Q	T_J=25°C				8	mA
Quiescent Current Change	ΔI_Q	I_O=5mA~350mA				0.5	mA
		I_O=200mA, V_I=27~38V				0.8	mA
Output Voltage Drift	ΔV/ΔT	I_O=5mA, T_J=0~125°C			-1.2		mV/°C
Output Noise Voltage	V_N	f=10Hz~100KHz			170		μV
Ripple Rejection	RR	f=120Hz, V_I=28~38V			70		dB
Dropout Voltage	V_D	T_J=25°C, I_O=500mA			2		V
Short Circuit Current	I_{SC}	T_J=25°C, V_I=35V			800		mA
Peak Current	I_{PK}	T_J=25°C			1300		mA

Notes:

Load and line regulation are specified at constant junction temperature. Change in Vo due to heating effects must be taken into account separately. Pulse testing with low duty is used.

8.Typical Application

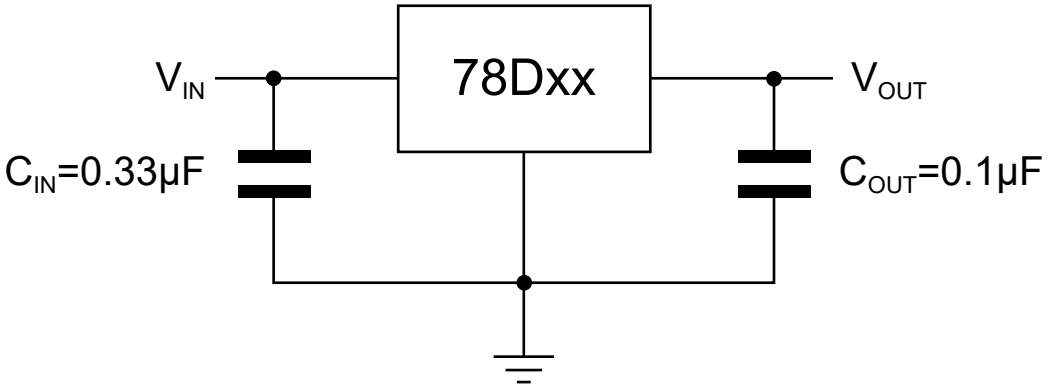

9.1 SOT-223Package Outline Dimensions

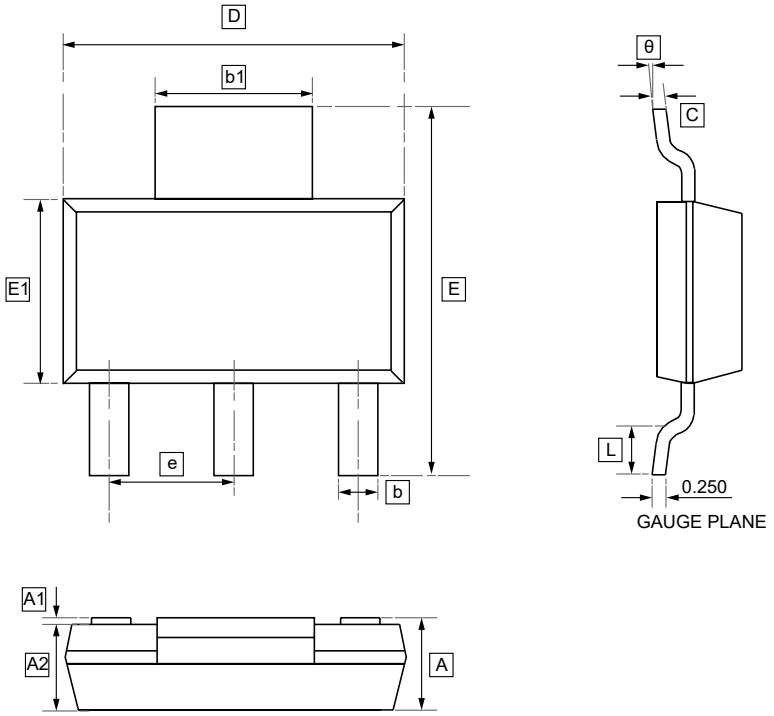

DIMENSIONS (mm are the original dimensions)

Symbol	A	A1	A2	b	b1	c	D	E	E1	e	L	θ
Min	-	0.020	1.500	0.660	2.900	0.230	6.300	6.700	3.300	2.300	0.750	0°
Max	1.800	0.100	1.700	0.840	3.100	0.350	6.700	7.300	3.700	BSC	-	10°

9.2TO-252 Package Outline Dimensions

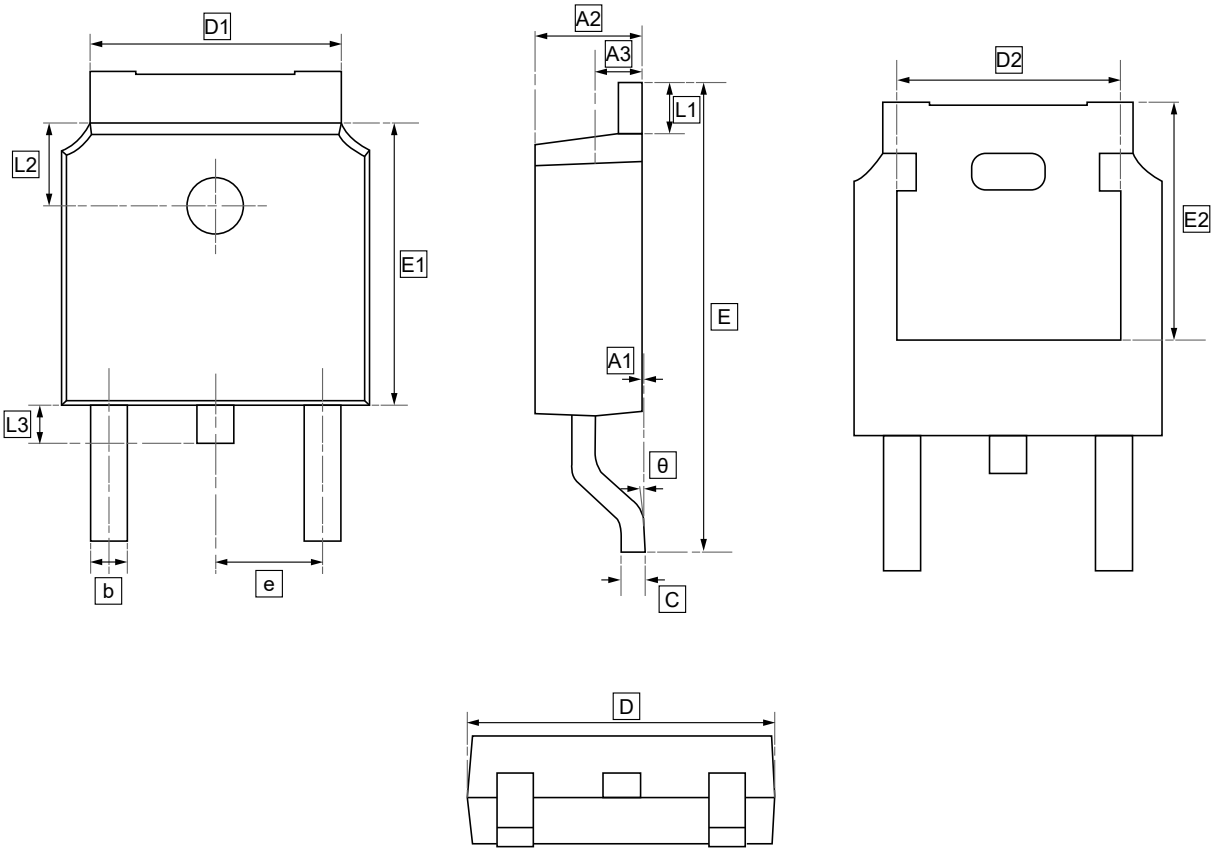

DIMENSIONS (mm are the original dimensions)

Symbol	A1	A2	A3	b	c	D	D1	D2	E	E1	E2	e	L1	L2	L3	θ
Min	0.00	2.18	0.90	0.65	0.46	6.35	4.95	4.32	9.40	5.97	5.21	2.286	0.89	1.70	0.60	0.00
Max	0.13	2.39	1.10	0.85	0.61	6.73	5.46	4.90	10.41	6.22	5.38	BSC	1.27	1.90	1.00	8.00

10.Ordering information

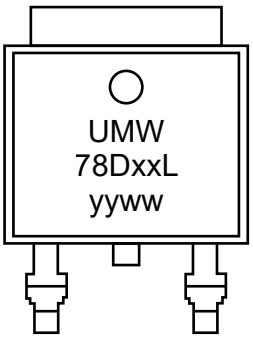

yy: Year Code
ww: Week Code

Order Code	Package	Base QTY	Delivery Mode
UMW 78DxxL	TO-252	2500	Tape and reel

11.Disclaimer

UMW reserves the right to make changes to all products, specifications. Customers should obtain the latest version of product documentation and verify the completeness and currency of the information before placing an order.

When applying our products, please do not exceed the maximum rated values, as this may affect the reliability of the entire system. Under certain conditions, any semiconductor product may experience faults or failures. Buyers are responsible for adhering to safety standards and implementing safety measures during system design, prototyping, and manufacturing when using our products to prevent potential failure risks that could lead to personal injury or property damage.

Unless explicitly stated in writing, UMW products are not intended for use in medical, life-saving, or life-sustaining applications, nor for any other applications where product failure could result in personal injury or death. If customers use or sell the product for such applications without explicit authorization, they assume all associated risks.

When reselling, applying, or exporting, please comply with export control laws and regulations of China, the United States, the United Kingdom, the European Union, and other relevant countries, regions, and international organizations.

This document and any actions by UMW do not grant any intellectual property rights, whether express or implied, by estoppel or otherwise. The product names and marks mentioned herein may be trademarks of their respective owners.