1.Description

UMW UCC27324DR is power switch driver. It has a matching rise and fall time when charging and discharging the gate of the power switch.UMW UCC27-324DR has high latch resistance under all conditions in its rated power and voltage range. When noise spikes of up to 5V (either polarity) occur on the ground pin, the UMW UCC27324DR is not damaged. UMW UCC27324DR can accept reverse currents up to 500 mA to force back its output without damage or logic confusion. All ports are fully protected by up to 2.0 kV electrostatic discharge (ESD).

2.Applications

- Switch-Mode Power Supplies
- line drivers
- Pulse transformer driver
- Driving MOSFETs and IGBTs
- Motor drives
- Pulse generator
- Switch-Mode Power Supplies
- DC-to-DC Converters
- Class D switching amplifier

3.Features

- Latch Protection: withstand 0.5 A reverse current
- Ability to Handle Negative Voltages (-10V) at Inputs
- Low Output Impedance
- Two Independent Gate-Drive Channel
- 4-A Peak Output Current
- 4.5 to 25-V Single-Supply Range
- High Ability of driving capacitive load
- Rise/Fall time matching
- Operating Temperature Range of -40 to 125°C
- Turn on/Turn off Delays:
- -- Ton/Toff =25ns/25ns

4.Pin Configuration

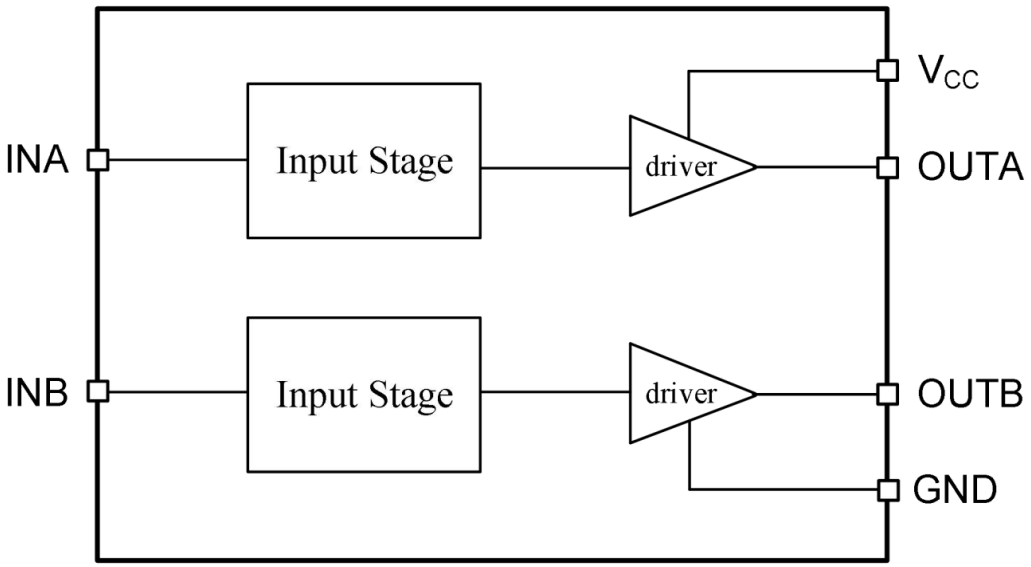

5.Pinning Information

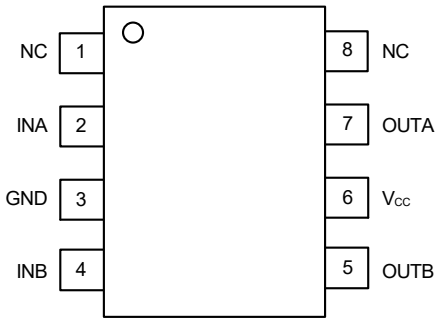

SOP-8

Lead Definitions

Number	Symbol	Description
1	NC	
2	INA	Input to Channel A
3	GND	Ground: All signals are referenced to this pin
4	INB	Input to Channel B
5	OUTB	Output of Channel B
6	V_{CC}	Bias supply input
7	OUTA	Output of Channel A
8	NC	

6.Absolute Maximum Ratings

Stresses beyond those listed under Absolute Maximum Ratings may cause permanent damage to the device. All voltages are with respect to GND unless otherwise noted, Currents are positive into, negative out of the specified terminal, environment temperature is 25°C.

Parameter	Symbol	Min	Max	Units
Supply voltage range	V_{CC}		25	V
INA, INB voltage	V_{IN}	0	V_{CC}+0.3	V
Human body model (HBM)	ESD		2000	V
Charged device model (CDM)			500	V
SOIC package power (T_A ≤70°C)	P_D		470	mW
Operating junction temperature	T_J		+150	°C
Storage temperature	T_S	-45	+150	°C

7.Electrical Characteristics

T_A=25°C, V_{CC}=15V (unless otherwise noted)

Parameter	Symbol	Condition	Min	Typ	Max	Units
Input signal high threshold	V_{IH}		2.4			V
Input signal low threshold	V_{IL}				0.8	V
Input current	I_{IN}+	V_{IN}=5V			10	μA
Input current	I_{IN}-	V_{IN}=0V	-10			μA
High output voltage	V_{OH}		V_{CC}-0.025			V
Low output voltage	V_{OL}				0.025	V
Output pullup resistance	R_{OH}	I_O=100mA		0.7		Ω
Output pulldown resistance	R_{OL}	I_O=100mA		0.4		Ω
Peak output source current	I_{PK}			4		A
Reverse current that latch protection can withstand (Working cycle≤2%, t≤300us)	I_{REV}			>0.5		A
Rise time	t_R	C_{LOAD}=1800pF			40	ns
Fall time	t_F	C_{LOAD}=1800pF			40	ns
Turn-on propagation delay	t_{ON}	C_{LOAD}=1800pF		25	35	ns
Turn-off propagation delay	t_{OFF}	C_{LOAD}=1800pF		25	35	ns
V_{CC} quiescent supply current	I_{Q1}	V_{INA}=V_{INB}=HIGH			1	mA
V_{CC} quiescent supply current	I_{Q0}	V_{INA}=V_{INB}=LOW			1	mA

8.Detailed Description

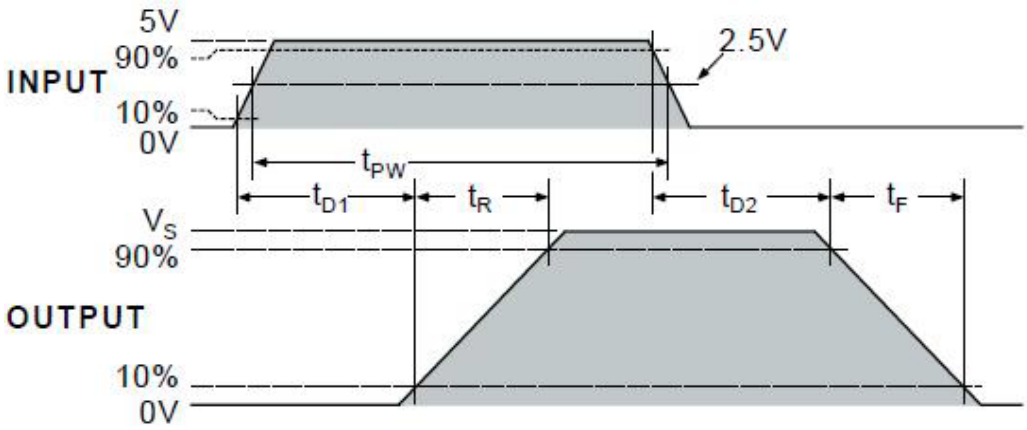

Figure 1. Input-Output waveform(non-inverting)

9.Functional Block Diagram

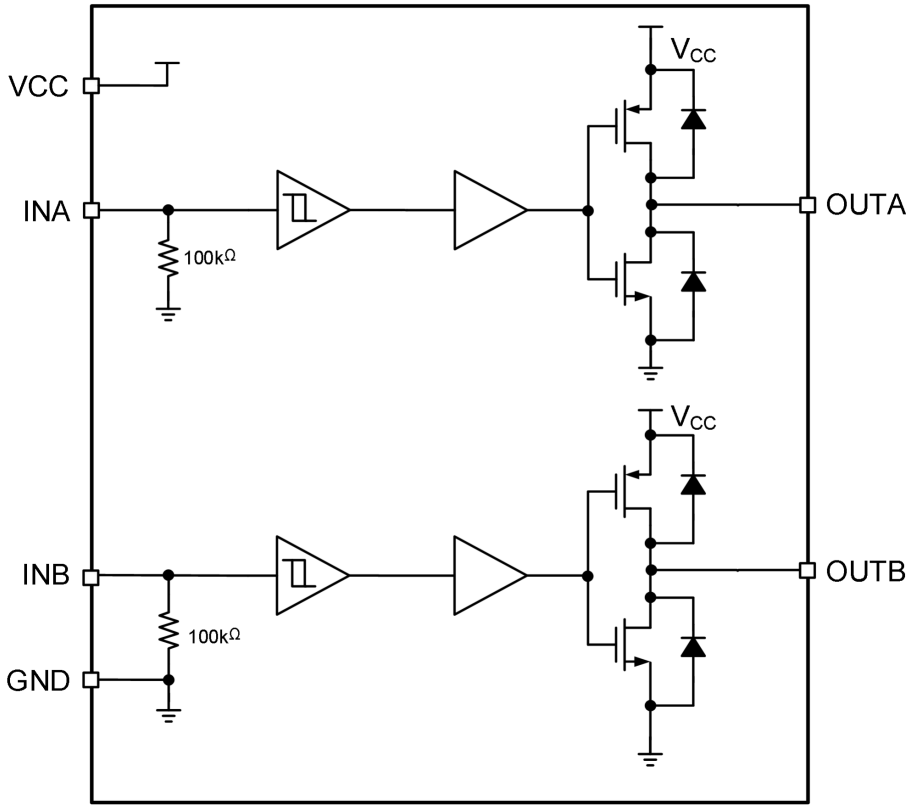

10.Typical Application

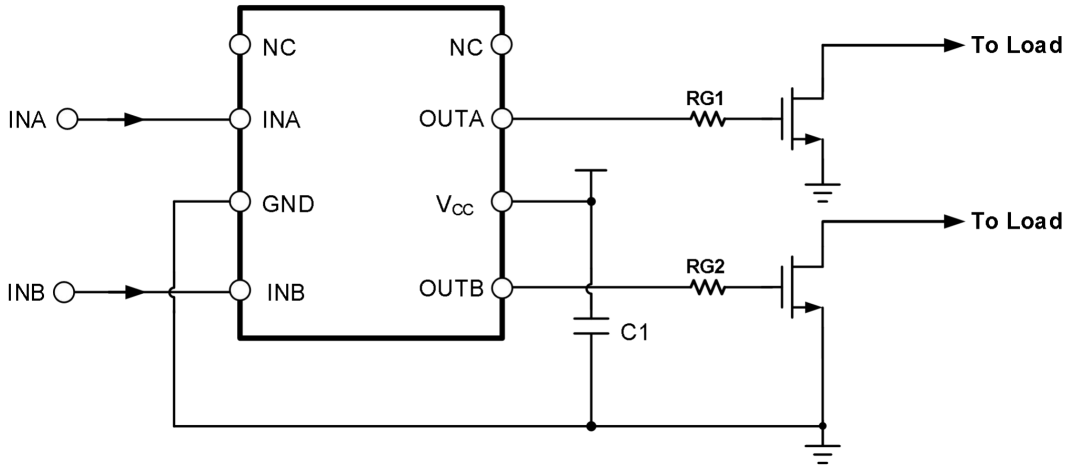

Figure 2. Typical Application Diagram of UMW UCC27324DR

11.SOP-8 Package Outline Dimensions

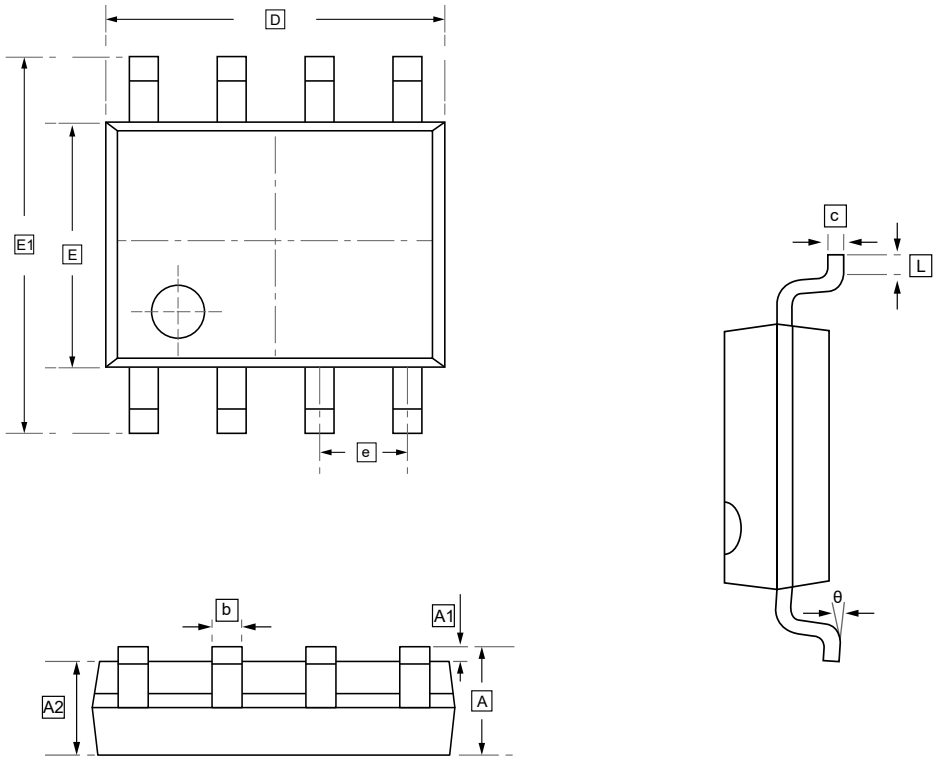

DIMENSIONS (mm are the original dimensions)

Symbol	A	A1	A2	b	c	D	E	E1	e	L	θ
Min	1.350	0.000	1.350	0.330	0.170	4.700	3.800	5.800	1.270	0.400	0°
Max	1.750	0.100	1.550	0.510	0.250	5.100	4.000	6.200	BSC	1.270	8°

12.Ordering information

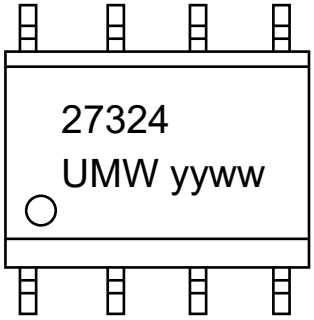

yy: Year Code
ww: Week Code

Order Code	Package	Base QTY	Delivery Mode
UMW UCC27324DR	SOP-8	2500	Tape and reel

13.Disclaimer

UMW reserves the right to make changes to all products, specifications. Customers should obtain the latest version of product documentation and verify the completeness and currency of the information before placing an order.

When applying our products, please do not exceed the maximum rated values, as this may affect the reliability of the entire system. Under certain conditions, any semiconductor product may experience faults or failures. Buyers are responsible for adhering to safety standards and implementing safety measures during system design, prototyping, and manufacturing when using our products to prevent potential failure risks that could lead to personal injury or property damage.

Unless explicitly stated in writing, UMW products are not intended for use in medical, life-saving, or life-sustaining applications, nor for any other applications where product failure could result in personal injury or death. If customers use or sell the product for such applications without explicit authorization, they assume all associated risks.

When reselling, applying, or exporting, please comply with export control laws and regulations of China, the United States, the United Kingdom, the European Union, and other relevant countries, regions, and international organizations.

This document and any actions by UMW do not grant any intellectual property rights, whether express or implied, by estoppel or otherwise. The product names and marks mentioned herein may be trademarks of their respective owners.