UMW MCP1702T-xxxxE

250 mA Low Quiescent Current LDO Regulator

1.Description

MCP1702T-xxxxE series is a positive voltage regulator circuit with low voltage difference, high precision output voltage and ultra-low power consumption current developed by practical CMOS technology.Due to the built-in low on state resistance transistor, so the output voltage difference is low, and it has high input voltage bearing capacity. The maximum working voltage can reach 14V, which is suitable for the application circuit requiring high voltage withstand.

2.Features

- High accuracy of output voltage: accuracy ± 2%
- Ultra low power consumption current: typical value 3ua
- Low output voltage temperature drift: 50 ppm /°C
- High input withstand voltage: increase to 14V and keep output voltage stable

3.Product use

- Regulated power supply using battery powered equipment
- Stabilized power supply for portable medical instruments
- Stabilized power supply for toys
- Stabilized power supply of communication equipment
- Regulated power supply for mobile phone

4.Pinning information

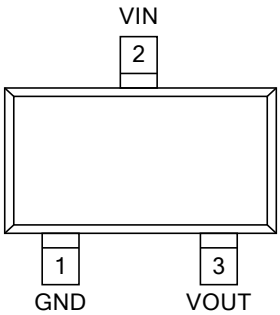

SOT-23

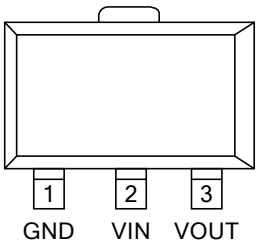

SOT-89

5.Model selection

Name	Maximum input voltage (V)	Output voltage (V)	Tolerance	Packaging
MCP1702T-xxxxE	14	1.8	±2%	SOT-23 SOT-89
	14	2.5	±2%	
	14	2.7	±2%	
	14	3	±2%	
	14	3.3	±2%	
	14	3.6	±2%	
	14	5	±2%	

6.Principle block diagram

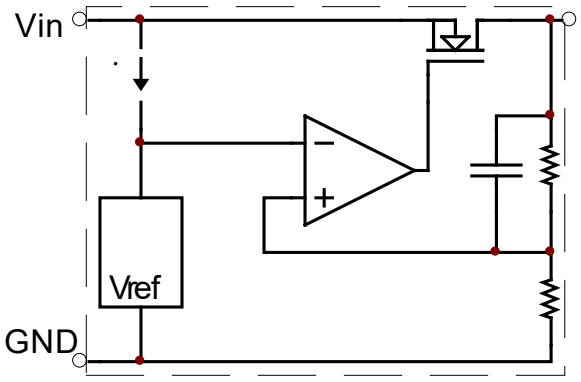

7.Application circuit

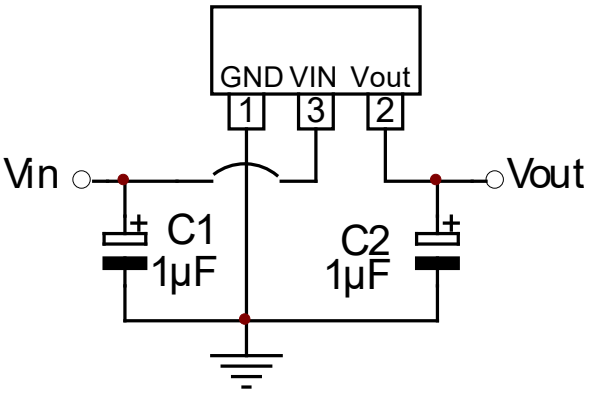

8.Limit parameter

Project	Symbol	parameter	Limit value	Company
Voltage	VIN	Maximum input voltage	16	V
power waste	PD	power waste	400	mW
temperature	Tw	working temperature	-25 to 70	°C
	Tc	Storage temperature	-40 to 85	°C
	Th	welding temperature	260	°C,10s
Output		Peak Output Current	500	mA

9.1Electrical properties (1.8V, T_{OPT}=25°C)

Parameter	Symbol	Conditions	Min	Typ	Max	Units
Output voltage	V_{OUT}	V_{IN}=2.8V, I_{OUT}=40mA	1.764	1.8	1.836	V
Output current	I_{OUT}	V_{IN}=2.8V, V_{OUT}≥1.62V		250		mA
Load regulation	ΔV_{OUT}	V_{IN}=2.8V, 1mA≤I_{OUT}≤60mA		45	90	mV
Drop voltage	V_{DIF}	I_{OUT}=40mA		170		mV
Quiescent current	I_{SS}	V_{IN}=2.8V, no load		2	3	μA
Line Regulation	$\Delta V_{OUT}/(\Delta V_{IN}*V_{OUT})$	2.8V≤V_{IN}≤14V, I_{OUT}=40mA		0.2	0.3	%/V
input voltage	V_{IN}				14	V
temperature coefficient	$\Delta V_{OUT}/\Delta T_A$	V_{IN}=2.8V, I_{OUT}=40mA, 0°C≤T_A≤85°C		±0.7		mV/°C

9.2Electrical properties (2.5V, T_{OPT}=25°C)

Parameter	Symbol	Conditions	Min	Typ	Max	Units
Output voltage	V_{OUT}	V_{IN}=3.5V, I_{OUT}=40mA	2.45	2.5	2.55	V
Output current	I_{OUT}	V_{IN}=3.5V, V_{OUT}≥2.25V		250		mA
Load regulation	ΔV_{OUT}	V_{IN}=3.5V, 1mA≤I_{OUT}≤60mA		45	90	mV
Drop voltage	V_{DIF}	I_{OUT}=40mA		110		mV
Quiescent current	I_{SS}	V_{IN}=3.5V, no load		2	3	μA
Line Regulation	$\Delta V_{OUT}/(\Delta V_{IN}*V_{OUT})$	3.5V≤V_{IN}≤14V, I_{OUT}=40mA		0.2	0.3	%/V
input voltage	V_{IN}				14	V
temperature coefficient	$\Delta V_{OUT}/\Delta T_A$	V_{IN}=3.5V, I_{OUT}=40mA, 0°C≤T_A≤85°C		±0.7		mV/°C

9.3Electrical properties (2.7V, T_{OPT}=25°C)

Parameter	Symbol	Conditions	Min	Typ	Max	Units
Output voltage	V_{OUT}	V_{IN}=3.7V, I_{OUT}=40mA	2.646	2.7	2.754	V
Output current	I_{OUT}	V_{IN}=3.7V, V_{OUT}≥2.43V		250		mA
Load regulation	ΔV_{OUT}	V_{IN}=3.7V, 1mA≤I_{OUT}≤60mA		45	90	mV
Drop voltage	V_{DIF}	I_{OUT}=40mA		100		mV
Quiescent current	I_{SS}	V_{IN}=3.7V, no load		2	3	μA
Line Regulation	$\Delta V_{OUT}/(\Delta V_{IN}*V_{OUT})$	3.7V≤V_{IN}≤14V, I_{OUT}=40mA		0.2	0.3	%/V
input voltage	V_{IN}				14	V
temperature coefficient	$\Delta V_{OUT}/\Delta T_A$	V_{IN}=3.7V, I_{OUT}=40mA, 0°C≤T_A≤85°C		±0.7		mV/°C

9.4Electrical properties (3V, T_{OPT}=25°C)

Parameter	Symbol	Conditions	Min	Typ	Max	Units
Output voltage	V_{OUT}	V_{IN}=4V, I_{OUT}=40mA	2.94	3	3.06	V
Output current	I_{OUT}	V_{IN}=4V, V_{OUT}≥2.7V		250		mA
Load regulation	ΔV_{OUT}	V_{IN}=4V, 1mA≤I_{OUT}≤60mA		45	90	mV
Drop voltage	V_{DIF}	I_{OUT}=40mA		95		mV
Quiescent current	I_{SS}	V_{IN}=4V, no load		2	3	μA
Line Regulation	$\Delta V_{OUT}/(\Delta V_{IN}*V_{OUT})$	4V≤V_{IN}≤14V, I_{OUT}=40mA		0.2	0.3	%/V
input voltage	V_{IN}				14	V
temperature coefficient	$\Delta V_{OUT}/\Delta T_A$	V_{IN}=4V, I_{OUT}=40mA, 0°C≤T_A≤85°C		±0.7		mV/°C

9.5Electrical properties (3.3V, T_{OPT}=25°C)

Parameter	Symbol	Conditions	Min	Typ	Max	Units
Output voltage	V_{OUT}	V_{IN}=4.3V, I_{OUT}=40mA	3.234	3.3	3.366	V
Output current	I_{OUT}	V_{IN}=4.3V, V_{OUT}≥2.97V		250		mA
Load regulation	ΔV_{OUT}	V_{IN}=4.3V, 1mA≤I_{OUT}≤60mA		45	90	mV
Drop voltage	V_{DIF}	I_{OUT}=40mA		90		mV
Quiescent current	I_{SS}	V_{IN}=4.3V, no load		2	3	μA
Line Regulation	$\Delta V_{OUT}/(\Delta V_{IN}*V_{OUT})$	4.3V≤V_{IN}≤14V, I_{OUT}=40mA		0.2	0.3	%/V
input voltage	V_{IN}				14	V
temperature coefficient	$\Delta V_{OUT}/\Delta T_A$	V_{IN}=4.3V, I_{OUT}=40mA, 0°C≤T_A≤85°C		±0.7		mV/°C

9.6Electrical properties (3.6V, T_{OPT}=25°C)

Parameter	Symbol	Conditions	Min	Typ	Max	Units
Output voltage	V_{OUT}	V_{IN}=4.5V, I_{OUT}=40mA	3.528	3.6	3.672	V
Output current	I_{OUT}	V_{IN}=4.5V, V_{OUT}≥3.15V		250		mA
Load regulation	ΔV_{OUT}	V_{IN}=4.5V, 1mA≤I_{OUT}≤60mA		45	90	mV
Drop voltage	V_{DIF}	I_{OUT}=40mA		80		mV
Quiescent current	I_{SS}	V_{IN}=4.5V, no load		2	3	μA
Line Regulation	$\Delta V_{OUT}/(\Delta V_{IN}*V_{OUT})$	4.5V≤V_{IN}≤14V, I_{OUT}=40mA		0.2	0.3	%/V
input voltage	V_{IN}				14	V
temperature coefficient	$\Delta V_{OUT}/\Delta T_A$	V_{IN}=4.5V, I_{OUT}=40mA, 0°C≤T_A≤85°C		±0.7		mV/°C

9.7Electrical properties (5V, T_{OPT}=25°C)

Parameter	Symbol	Conditions	Min	Typ	Max	Units
Output voltage	V_{OUT}	V_{IN}=6V, I_{OUT}=40mA	4.9	5	5.1	V
Output current	I_{OUT}	V_{IN}=6V, V_{OUT}≥4.5V		250		mA
Load regulation	ΔV_{OUT}	V_{IN}=6V, 1mA≤I_{OUT}≤60mA		45	90	mV
Drop voltage	V_{DIF}	I_{OUT}=40mA		60		mV
Quiescent current	I_{SS}	V_{IN}=6V, no load		2	3	μA
Line Regulation	$\Delta V_{OUT}/(\Delta V_{IN}*V_{OUT})$	6V≤V_{IN}≤14V, I_{OUT}=40mA		0.2	0.3	%/V
input voltage	V_{IN}				14	V
temperature coefficient	$\Delta V_{OUT}/\Delta T_A$	V_{IN}=6V, I_{OUT}=40mA, 0°C≤T_A≤85°C		±0.7		mV/°C

10.Typical Application

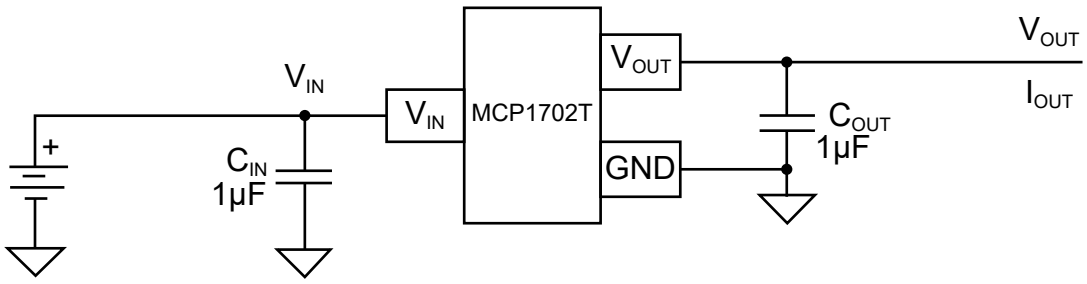

11.1SOT-23 Package Outline Dimensions

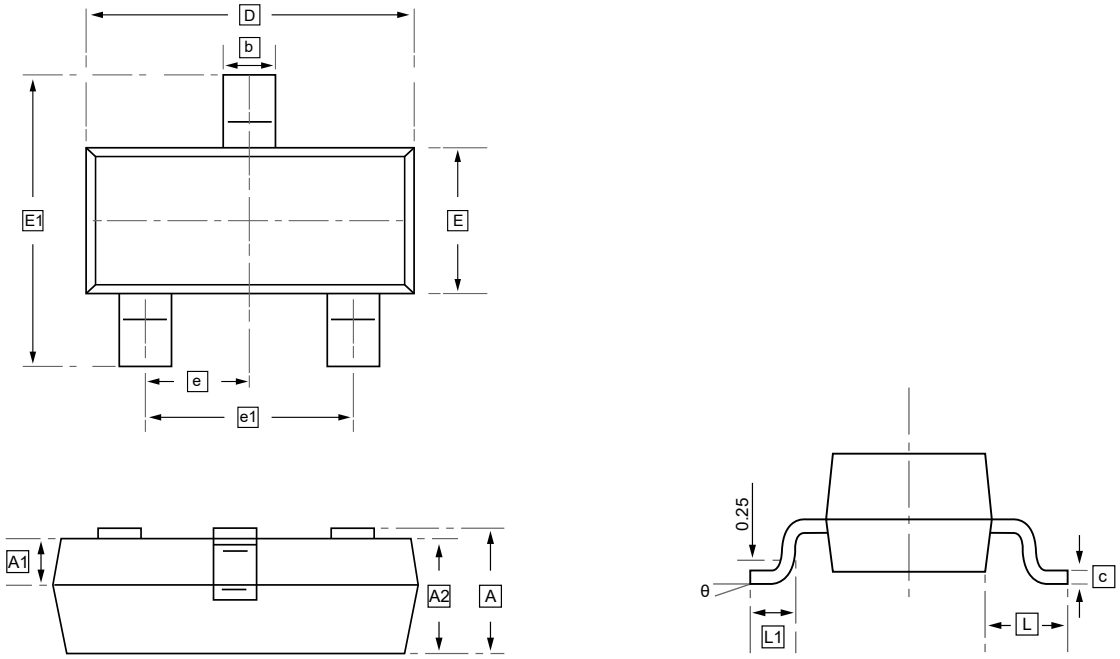

DIMENSIONS (mm are the original dimensions)

Symbol	A	A1	A2	b	c	D	E	E1	e	e1	L	L1	θ
Min	0.900	0.000	0.900	0.300	0.080	2.800	1.200	2.250	0.950	1.800	0.550	0.300	0°
Max	1.150	0.100	1.050	0.500	0.150	3.000	1.400	2.550	TYP.	2.000	REF.	0.500	8°

11.2SOT-89-3 Package Outline Dimensions

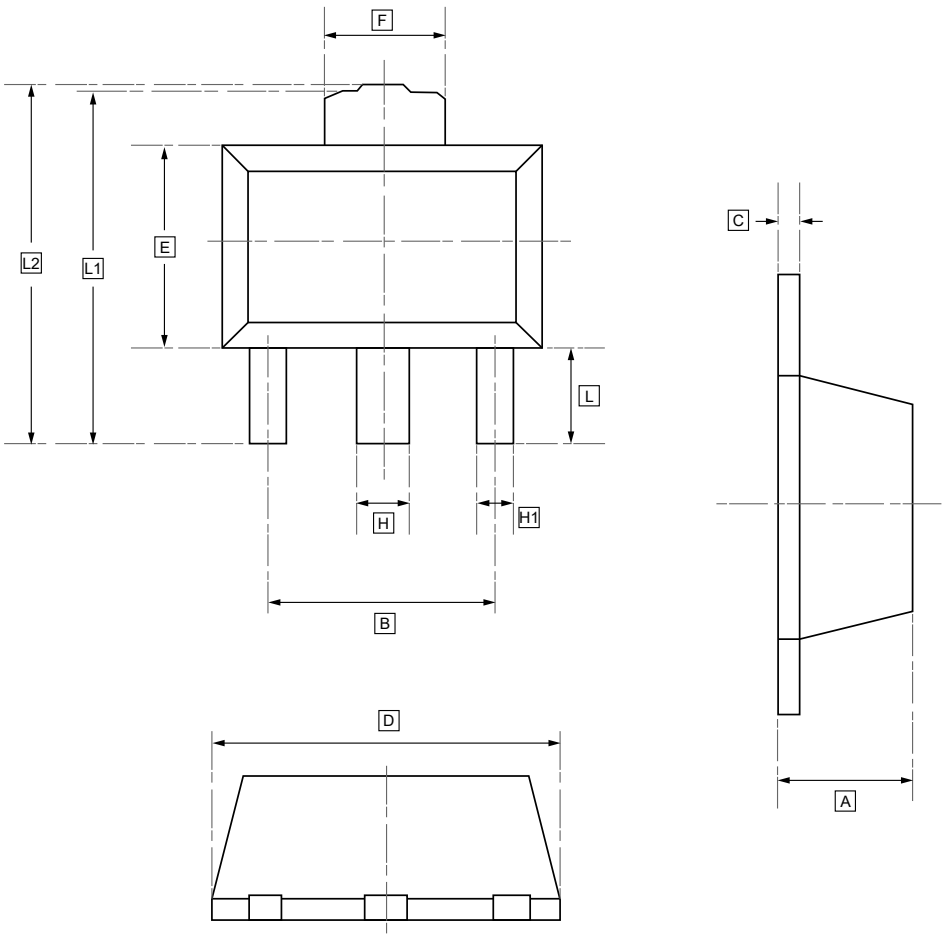

DIMENSIONS (mm are the original dimensions)

Symbol	A	B	C	D	E	F	H	H1	L	L1	L2
Min	1.40	2.90	0.330	4.40	2.30	1.60	0.40	0.320	0.900	3.900	4.100
Max	1.60	3.10	0.430	4.60	2.60	1.80	0.580	0.520	1.200	4.300	4.350

12.Ordering information

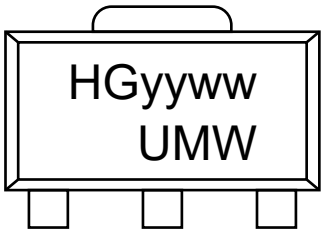

yy: Year Code
ww: Week Code

Order Code	Package	Base QTY	Delivery Mode
UMW MCP1702T-xxxxE/CB	SOT-23	3000	Tape and reel
UMW MCP1702T-xxxxE/MB	SOT-89	1000	Tape and reel

13.Disclaimer

UMW reserves the right to make changes to all products, specifications. Customers should obtain the latest version of product documentation and verify the completeness and currency of the information before placing an order.

When applying our products, please do not exceed the maximum rated values, as this may affect the reliability of the entire system. Under certain conditions, any semiconductor product may experience faults or failures. Buyers are responsible for adhering to safety standards and implementing safety measures during system design, prototyping, and manufacturing when using our products to prevent potential failure risks that could lead to personal injury or property damage.

Unless explicitly stated in writing, UMW products are not intended for use in medical, life-saving, or life-sustaining applications, nor for any other applications where product failure could result in personal injury or death. If customers use or sell the product for such applications without explicit authorization, they assume all associated risks.

When reselling, applying, or exporting, please comply with export control laws and regulations of China, the United States, the United Kingdom, the European Union, and other relevant countries, regions, and international organizations.

This document and any actions by UMW do not grant any intellectual property rights, whether express or implied, by estoppel or otherwise. The product names and marks mentioned herein may be trademarks of their respective owners.