UMW CESD3V3AP

1.Description

The CESD3V3AP is a Transient Voltage Suppressor Arrays that designed to protect components which are connected to data and transmission lines against electrostatic discharge (ESD), electrical fast Transients (EFT), and lightning.

2.Applications

- Portable electronics
- Control & monitoring systems
- Servers, notebooks, and desktop PCs
- Set-top box
- Communication systems

3.Features

- IEC 61000-4-2 Level 4 ESD Protection
- ±30kV Contact Discharge
- ±30kV Air Discharge
- 500W Peak pulse Power (8/20us)
- Low clamping
- voltage Working
- voltage: 3.3V
- Low leakage current
- ESD Protection > 15kV
- Protecting one bidirectional or two
- unidirectional lines

4.Pinning information

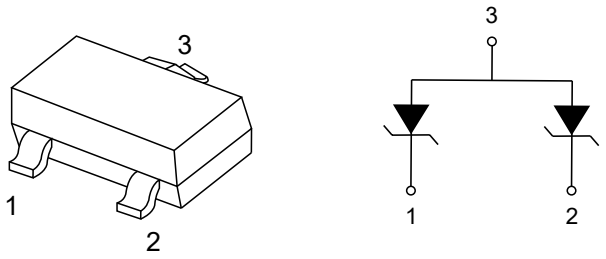

SOT-23

5.Absolute Maximum Ratings

Parameter	Symbol	Min.	Max.	Units
Peak pulse power (t_p=8/20us)@25°C	P_{PK}		500	W
Peak pulse current (t_p=8/20us)@25°C	I_{PP}		25	A
ESD (IEC61000-4-2 air discharge) @25°C	V_{ESD}		±30	kV
ESD (IEC61000-4-2 contact discharge) @25°C	V_{ESD}		±30	kV
Junction temperature	T_J		150	°C
Operating temperature	T_{OP}	-40	125	°C
Storage temperature	T_{STG}	-55	150	°C
Lead temperature	T_L		260	°C

Table-3 Absolute Maximum rating

6.Electrical Characteristic (T_A=25°C unless otherwise noted)

Parameter	Symbol	Conditions	Min	Typ	Max	Units
Reverse Stand-Off Voltage	V_{RWM}				3.3	V
Reverse Breakdown Voltage	V_{BR}	I_T=1mA	4			V
Reverse Leakage Current	I_R	V_{RWM}=3V			1	uA
Clamping Voltage	V_C	I_{PP}=1A, t_p=8/20μs		8		V
Clamping Voltage	V_C	I_{PP}=25A, t_p=8/20μs		20		V
Junction capacitance	C_J	V_R=0V, f=1MHz		400		pF

Table-4 Electrical Characteristics

7.Electrical Parameters (T=25°C)

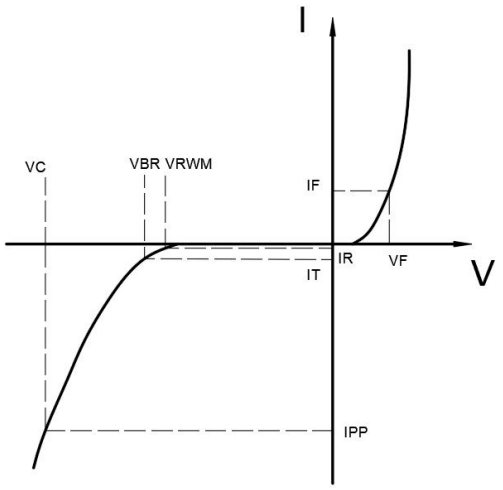

Symbol	Parameter
V_{RWM}	Peak Reverse Working Voltage
I_R	Reverse Leakage Current @ V_{RWM}
V_{BR}	Breakdown Voltage @ I_T
I_T	Test Current
I_{PP}	Maximum Reverse Peak Pulse Current
V_C	Clamping Voltage @ I_{PP}
I_F	Forward Current
V_F	Forward Voltage @ I_F

8.Typical Characteristic

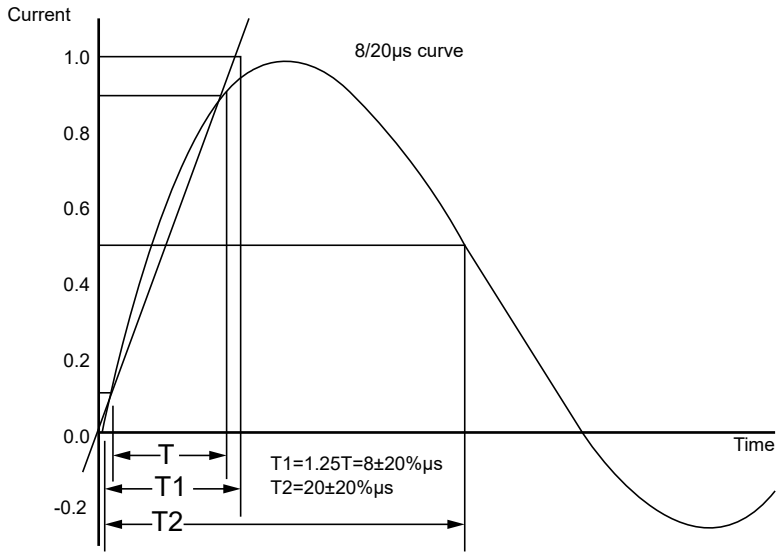

9.SOT-23 Package Outline Dimensions

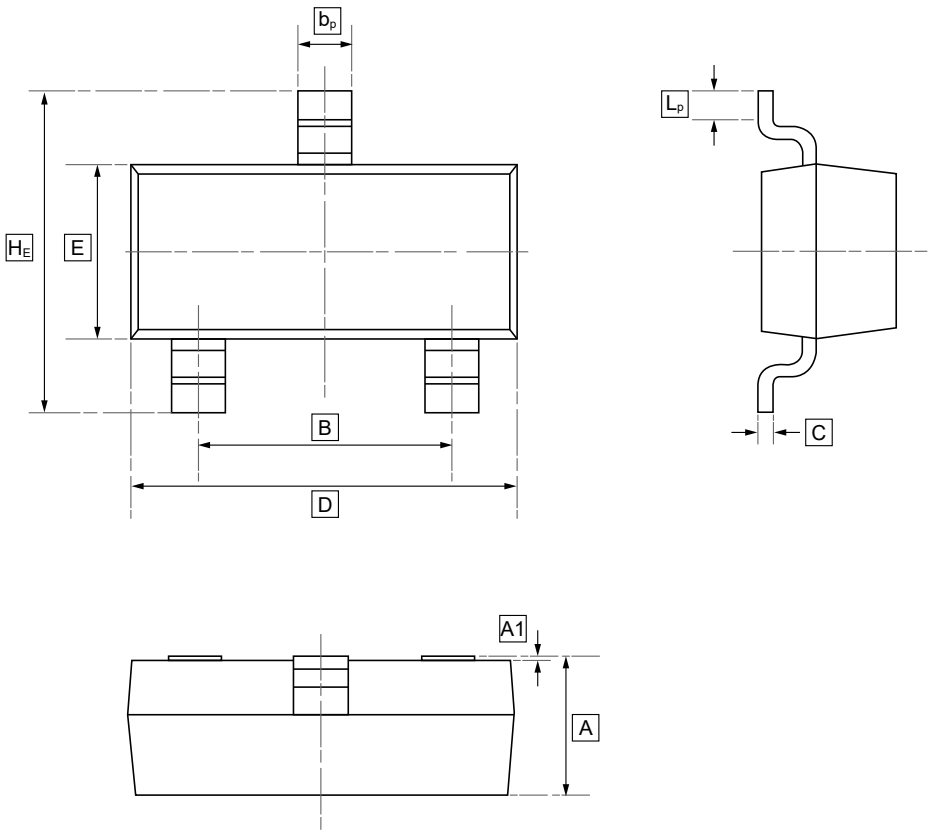

DIMENSIONS (mm are the original dimensions)

Symbol	A	B	b_p	C	D	E	H_E	A1	L_p
Min	0.95	1.78	0.35	0.08	2.70	1.20	2.20	0.013	0.20
Max	1.40	2.04	0.50	0.19	3.10	1.65	3.00	0.100	0.50

10.Ordering information

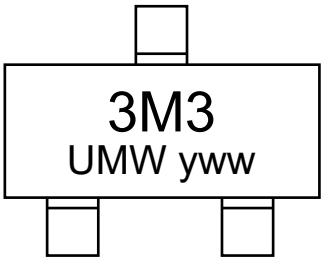

yww: Batch Code

Order Code	Package	Base QTY	Delivery Mode
UMW CESD3V3AP	SOT-23	3000	Tape and reel

11.Disclaimer

UMW reserves the right to make changes to all products, specifications. Customers should obtain the latest version of product documentation and verify the completeness and currency of the information before placing an order.

When applying our products, please do not exceed the maximum rated values, as this may affect the reliability of the entire system. Under certain conditions, any semiconductor product may experience faults or failures. Buyers are responsible for adhering to safety standards and implementing safety measures during system design, prototyping, and manufacturing when using our products to prevent potential failure risks that could lead to personal injury or property damage.

Unless explicitly stated in writing, UMW products are not intended for use in medical, life-saving, or life-sustaining applications, nor for any other applications where product failure could result in personal injury or death. If customers use or sell the product for such applications without explicit authorization, they assume all associated risks.

When reselling, applying, or exporting, please comply with export control laws and regulations of China, the United States, the United Kingdom, the European Union, and other relevant countries, regions, and international organizations.

This document and any actions by UMW do not grant any intellectual property rights, whether express or implied, by estoppel or otherwise. The product names and marks mentioned herein may be trademarks of their respective owners.