UMW PESD5V0L1UB

1.Description

Low capacitance unidirectional ElectroStatic Discharge (ESD) protection diodes in small Surface-Mounted Device (SMD) plastic packages designed to protect one signal line from the damage caused by ESD and other transients.

2.Features

- Unidirectional ESD protection of
- ESD protection up to 26 kV
- Low diode capacitance: C_d=25pF
- IEC 61000-4-2; level 4 (ESD)
- Low clamping voltage: V_{CL}=12V
- Very low leakage current: I_{RM}=10nA
- AEC-Q101 qualified

3.Applications

- Computers and peripherals
- Audio and video equipment
- Cellular handsets and accessories
- Communication systems
- Portable electronics
- Subscriber Identity Module (SIM) card protection
- FireWire
- High-speed data lines

4.Pinning information

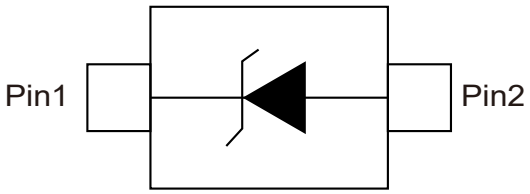

SOD-523

5. Quick reference data

T_{amb}=25°C unless otherwise specified.

Parameter	Symbol	Conditions	Min	Typ	Max	Units
reverse standoff voltage	V_{RWM}				5	V
diode capacitance	C_d	V_R=0V, f=1MHz		25	30	pF

6.Limiting values

In accordance with the Absolute Maximum Rating System (IEC 60134).

Parameter	Symbol	Conditions	Min	Typ	Max	Units
peak pulse power	P_{PP}	t_p=8/20μs ①②			42	W
peak pulse current	I_{PP}	t_p=8/20μs ①②			3.5	A
junction temperature	T_J				150	°C
ambient temperature	T_{amb}		-55		150	°C
storage temperature	T_{STG}		-65		150	°C

Notes:

① Non-repetitive current pulse 8/20 μs exponential decay waveform according to IEC 61000-4-5.

② Measured from pin 1 to pin 2.

7.ESD maximum ratings

T_{amb}=25°C unless otherwise specified.

Parameter	Symbol	Conditions	Min	Typ	Max	Units
electrostatic discharge voltage	V_{ESD}	IEC 61000-4-2 (contact discharge) ①			26	kV
		machine model			400	V
		MIL-STD-883 (human body model)			10	kV

Notes:

① Device stressed with ten non-repetitive ESD pulses.

8.Electrical Characteristic (T_A=25°C unless otherwise noted)

Parameter	Symbol	Conditions	Min	Typ	Max	Units
reverse standoff voltage	V_{RWM}				5	V
reverse leakage current	I_{RM}	V_{RWM}=5V		10	100	nA
breakdown voltage	V_{BR}	I_R=5mA	6.4	6.8	7.2	V
diode capacitance	C_d	V_R=0V, f=1MHz		25	30	pF
clamping voltage	V_{CL}	①②				
		I_{PP}=1A			9	V
		I_{PP}=3.5A			12	V
differential resistance	r_{dif}	I_R=5mA			30	Ω
forward voltage	V_F	I_F=200mA			1.2	V

Notes:

① Non-repetitive current pulse 8/20 μs exponential decay waveform according to IEC 61000-4-5.

② Measured from pin 1 to pin 2.

9.1 Typical Characteristic

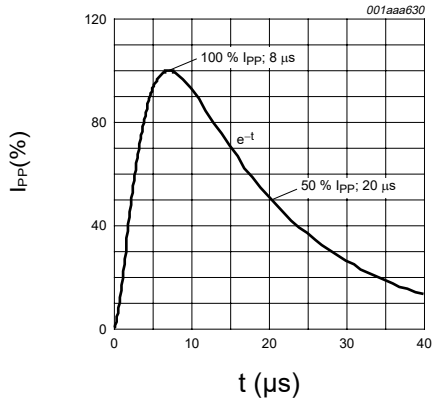

Figure 1: 8/20 µs pulse waveform according to IEC 61000-4-5

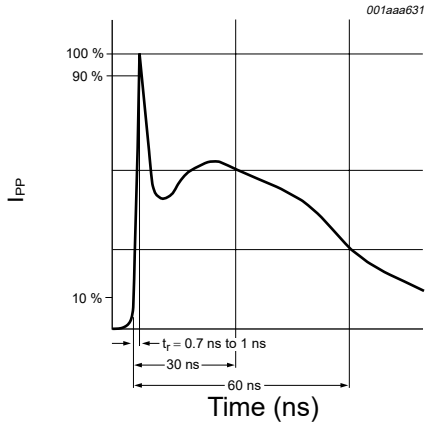

Figure 2: ESD pulse waveform according to IEC 61000-4-2

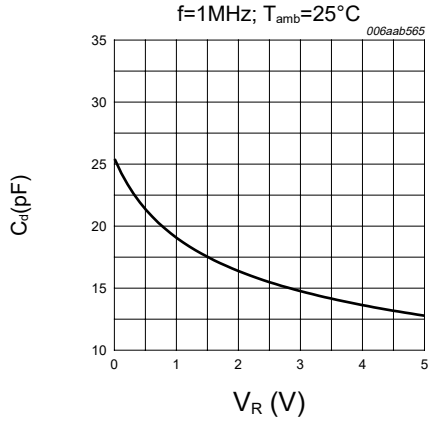

Figure 3: Diode capacitance as a function of reverse voltage; typical values

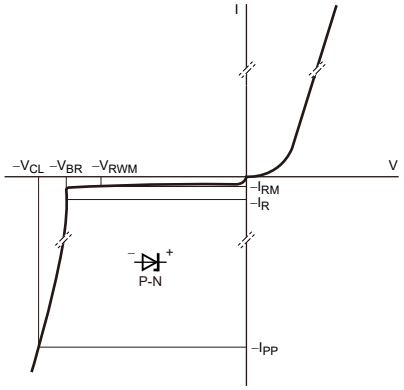

Figure 4: V-I characteristics for a unidirectional ESD protection diode

9.2 Typical Characteristic

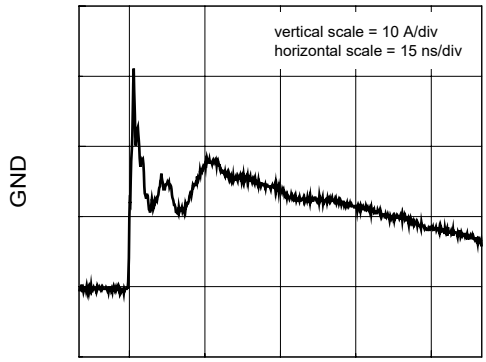

Figure 1: unclamped +8 kV ESD pulse waveform (IEC 61000-4-2 network)

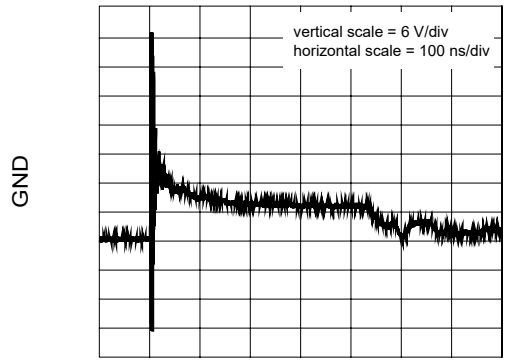

Figure 2: clamped +8 kV ESD pulse waveform (IEC 61000-4-2 network) pin 1 to 2

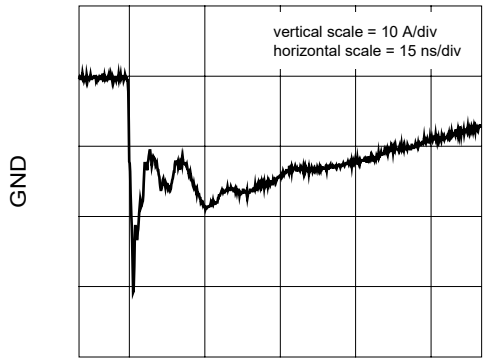

Figure 3: unclamped −8 kV ESD pulse waveform (IEC 61000-4-2 network)

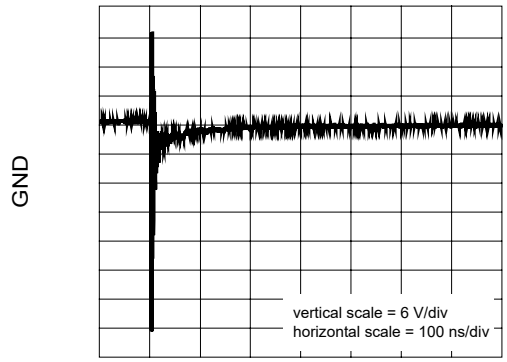

Figure 4: clamped −8 kV ESD pulse waveform (IEC 61000-4-2 network) pin 1 to 2

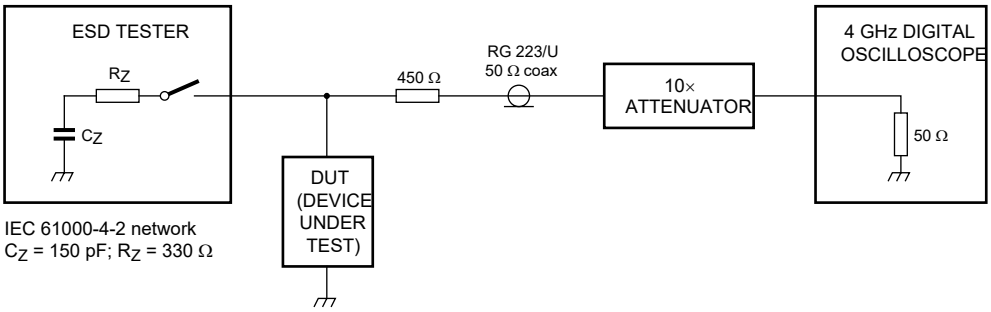

10.SOD-523 Package Outline Dimensions

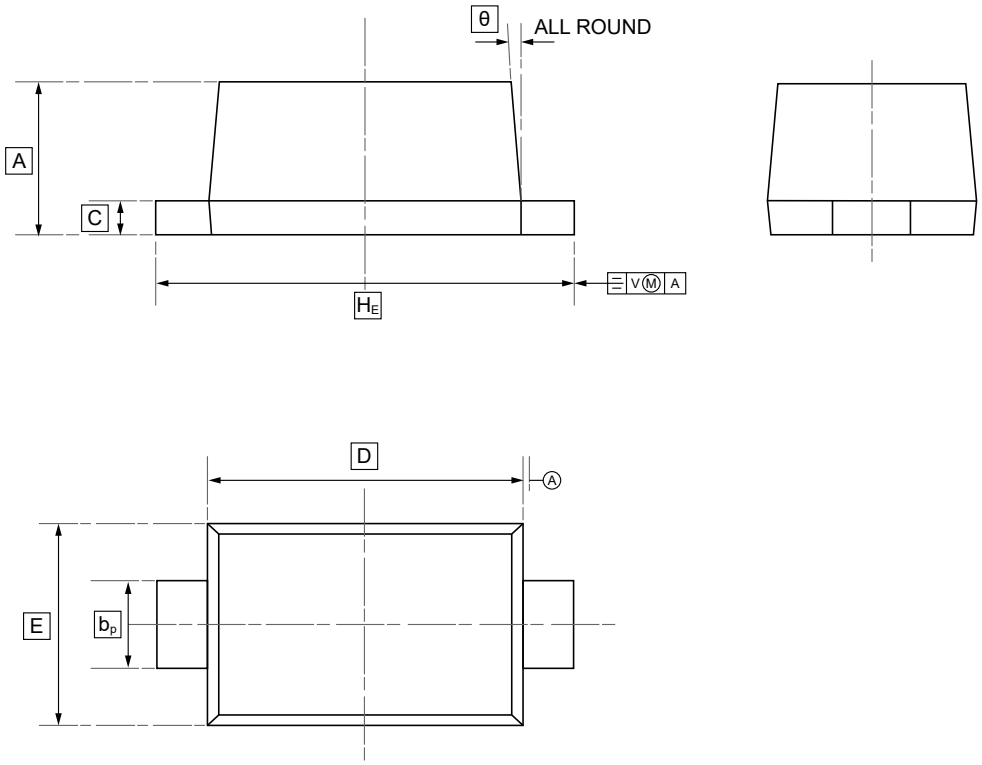

DIMENSIONS (mm are the original dimensions)

Symbol	A	b_p	C	D	E	H_E	θ
Min	0.58	0.3	0.100	1.15	0.75	1.5	5°
Max	0.68	0.4	0.135	1.25	0.85	1.7	

11.Ordering Information

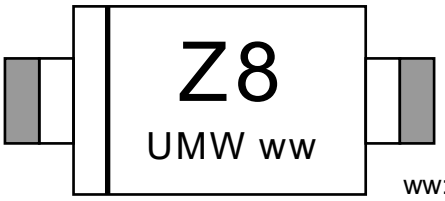

ww: Batch Code

Order Code	Package	Base QTY	Delivery Mode
UMW PESD5V0L1UB	SOD-523	3000	Tape and reel

12.Disclaimer

UMW reserves the right to make changes to all products, specifications. Customers should obtain the latest version of product documentation and verify the completeness and currency of the information before placing an order.

When applying our products, please do not exceed the maximum rated values, as this may affect the reliability of the entire system. Under certain conditions, any semiconductor product may experience faults or failures. Buyers are responsible for adhering to safety standards and implementing safety measures during system design, prototyping, and manufacturing when using our products to prevent potential failure risks that could lead to personal injury or property damage.

Unless explicitly stated in writing, UMW products are not intended for use in medical, life-saving, or life-sustaining applications, nor for any other applications where product failure could result in personal injury or death. If customers use or sell the product for such applications without explicit authorization, they assume all associated risks.

When reselling, applying, or exporting, please comply with export control laws and regulations of China, the United States, the United Kingdom, the European Union, and other relevant countries, regions, and international organizations.

This document and any actions by UMW do not grant any intellectual property rights, whether express or implied, by estoppel or otherwise. The product names and marks mentioned herein may be trademarks of their respective owners.