1.Description

Offers Transient Voltage Suppressor Diodes for surge and ESD protection applications in SOD-323 package size format. The Transient Voltage Suppressor series offers a choice of voltage types ranging from 3 V to 36 V in a unidirectional or bidirectional configuration

2.Features

- ESD protection 30 kV max.
- Surge protection >24 A
- Protects 1 line
- Uni/bidirectional configuration

3.Applications

- Computer notebooks
- Cellular phones
- Personal Digital Assistants (PDAs)
- Digital cameras

4.Pinning information

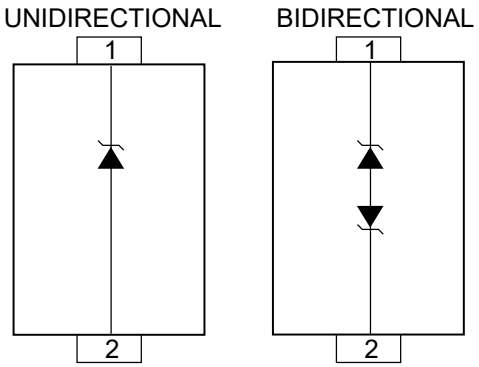

SOD-323

5.Electrical & Thermal Characteristics

Parameter	Symbol	Value	Units
Unidirectional Peak Pulse Power (tp = 8/20 μs)	P_{PP}	500	W
Bidirectional Peak Pulse Power (tp = 8/20 μs)	P_{PP}	400	W
Junction Temperature	T_L	-55 to 150	°C
Storage Temperature	T_{STG}	-55 to 150	°C
ESD Protection (per IEC 61000-4-2) Contact - Min.	E_{SD}	±8	kV
Contact - Max.		±30	kV
Air - Min.		±15	kV
Air - Max		±30	kV

6.Electrical & Thermal Characteristics

Parameter	Symbol	Uni-T03S	Bi-T03SC	Uni-T05S	Bi-T05SC	Uni-T08S	Bi-T08SC	Uni-T12S	Bi-T12SC	Unit
Min. Breakdown Voltage @ 1mA	V_{BR}	4	4	6	6	8.5	8.5	13.3	13.3	V
Working Peak Voltage	V_M	3.3	3.3	5	5	8	8	12	12	V
Maximum Clamping Voltage @ I_P=1A	V_F	7	8	9.8	9.8	13.4	13.4	19	19	V
Typical Clamping Voltage	V_C	10.9V	10.9V	13.5V	14.5V	16.9V	18.5V	25.9V	29.5V	V
@ 8/20 μs @ I_{PP}	V_C	@43A	@43A	@42A	@28A	@34A	@17A	@21A	@14A	V
Maximum Leakage Current @ V_{WM}	I_D	125	125	10	10	10	10	1	1	μA
Typical Capacitance @0V, 1MHz	C_P	500	200	350	175	250	150	150	50	pF

Parameter	Symbol	Uni-T15S	Bi-T15SC	Uni-T18S	Bi-T18SC	Uni-T24S	Bi-T24SC	Uni-T36S	Bi-T36SC	Unit
Min. Breakdown Voltage @ 1mA	V_{BR}	16.7	16.7	20	20	26.7	26.7	40	40	V
Working Peak Voltage	V_M	15	15	18	18	24	24	36	36	V
Maximum Clamping Voltage @ I_P=1A	V_F	24	24	29	29	43	43	60	60	V
Typical Clamping Voltage	V_C	30V	33V	40V	40V	49V	46.2V	75V	75V	V
@ 8/20 μs @ I_{PP}	V_C	@17A	@12A	@9A	@9A	@12A	@9A	@5A	@5A	V
Maximum Leakage Current @ V_{WM}	I_D	1								μA
Typical Capacitance @0V, 1MHz	C_P	100	40	90	40	88	40	75	35	pF

Notes:

1.Part numbers with suffix “C” indicate bidirectional device, i.e. CDSOD323-T05SC.

2.For bidirectional devices only, the electrical specifications apply in both directions.

7.Typical characteristic

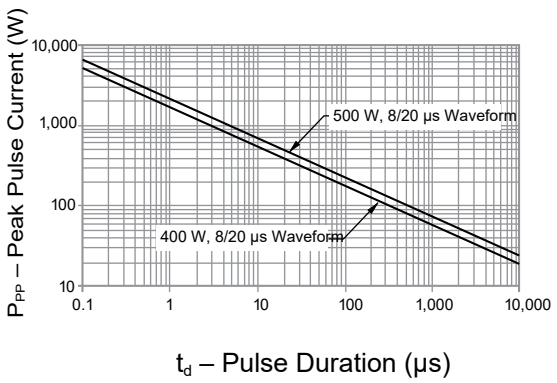

Figure 1: Peak Pulse Power vs Pulse Time

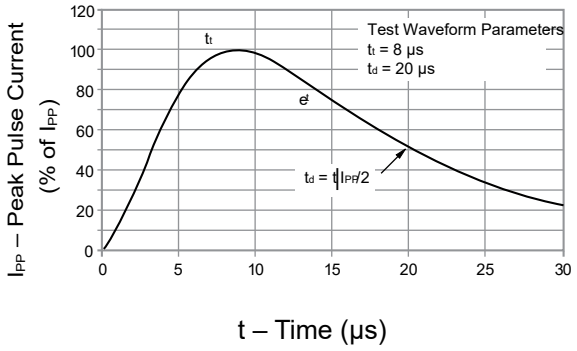

Figure 2: Pulse Waveform

8.SOD-323 Package Outline Dimensions

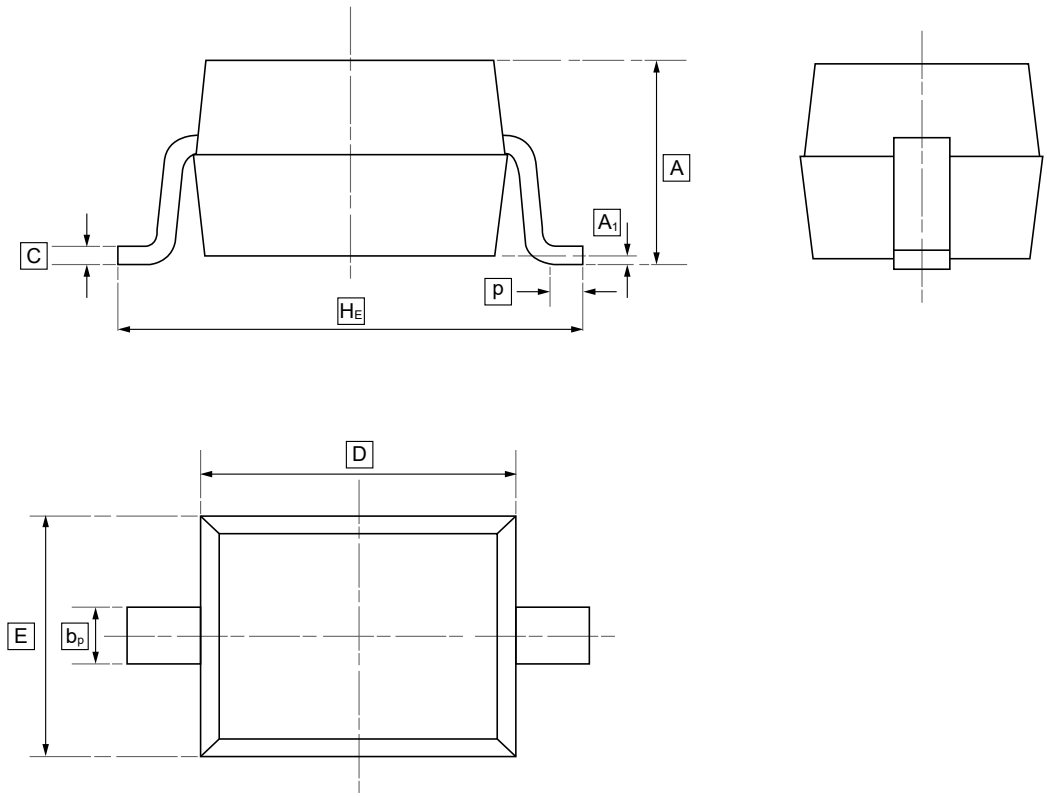

DIMENSIONS (mm are the original dimensions)

Symbol	A	b_p	C	D	E	H_E	A_1	P
Min	0.90	0.25	0.10	1.60	1.15	2.30	0.01	0.20
Max	1.20	0.40	0.15	1.80	1.35	2.80	0.10	0.50

9.Ordering information

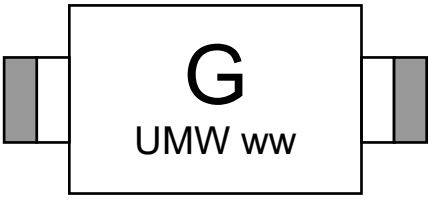

ww: Batch Code

Order Code	Package	Base QTY	Delivery Mode
UMW CDSOD323-T03SC	SOD-323	3000	Tape and reel

10.Disclaimer

UMW reserves the right to make changes to all products, specifications. Customers should obtain the latest version of product documentation and verify the completeness and currency of the information before placing an order.

When applying our products, please do not exceed the maximum rated values, as this may affect the reliability of the entire system. Under certain conditions, any semiconductor product may experience faults or failures. Buyers are responsible for adhering to safety standards and implementing safety measures during system design, prototyping, and manufacturing when using our products to prevent potential failure risks that could lead to personal injury or property damage.

Unless explicitly stated in writing, UMW products are not intended for use in medical, life-saving, or life-sustaining applications, nor for any other applications where product failure could result in personal injury or death. If customers use or sell the product for such applications without explicit authorization, they assume all associated risks.

When reselling, applying, or exporting, please comply with export control laws and regulations of China, the United States, the United Kingdom, the European Union, and other relevant countries, regions, and international organizations.

This document and any actions by UMW do not grant any intellectual property rights, whether express or implied, by estoppel or otherwise. The product names and marks mentioned herein may be trademarks of their respective owners.