1.Description

- 45Watts peak pulse power (tp=8/20μs)
- Solid-state silicon-avalanche technology
- Low clamping voltage
- Low leakage current
- Low capacitance (Cj=0.3pF typ. IO to IO)
- Protection one data/power line to:
- IEC 61000-4-2 ±12kV contact ±15kV air
- IEC 61000-4-4 (EFT) 40A(5/50ns)
- IEC 61000-4-5 (Lightning) 3.5A(8/20μs)

2.Applications

- Ethernet
- Digital Visual Interface (DVI)
- USB 2.0
- Notebook and PC Computers

3.Pinning information

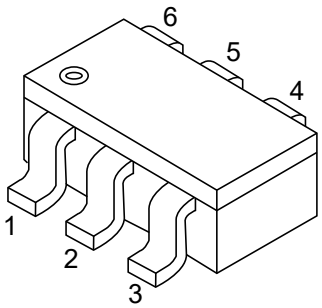

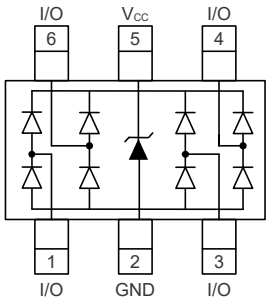

SOT23-6

4.Absolute Maximum Ratings T_A= 25°C

Parameter	Symbol	Maximum	Units
Peak Pulse Power (tp=8/20μs)	P_{pp}	45	Watts
Peak Pulse Current (tp=8/20μs)(note1)	I_{pp}	3.5	A
ESD per IEC 61000-4-2(Air)	V_{ESD}	15	kV
ESD per IEC 61000-4-2(Contact)		12	kV
Lead Soldering Temperature	T_L	260(10seconds)	°C
Junction Temperature	T_J	-55 to 125	°C
Storage Temperature	T_{STG}	-55 to 125	°C

5.Electrical Characteristic (T_A=25°C unless otherwise noted)

Parameter	Symbol	Conditions	Min	Typ	Max	Units
Reverse Stand-Off Voltage	V_{RWM}				5	V
Reverse Breakdown Voltage	V_{BR}	I_T=1mA	6	6.8	8.5	V
Reverse Leakage Current	I_R	V_{RWM}=5V, T=25°C		50	500	nA
Peak Pulse Current	I_{PP}	tp=8/20μs			3.5	A
Clamping Voltage	V_C	I_{PP}=3.5A, t_p=8/20μs		10	13	V
Junction capacitance	C_J	V_R=0V, f=1MHz, IO to IO		0.2	0.25	pF
		V_R=0V, f=1MHz, IO to GND		0.36	0.5	pF

6.Electrical Parameters (T_A=25°C unless otherwise noted)

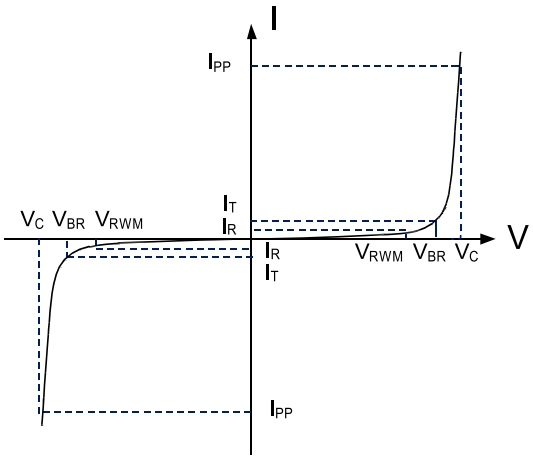

Notes: 8/20μs pulse waveform.

Symbol	Parameter
I_{PP}	Maximum Reverse Peak Pulse Current
V_C	Clamping Voltage @ I_{PP}
V_{RWM}	Working Peak Reverse Voltage
I_R	Maximum Reverse Leakage Current @ V_{RWM}
V_{BR}	Breakdown Voltage @ I_T
I_T	Test Current

7.Typical characteristic

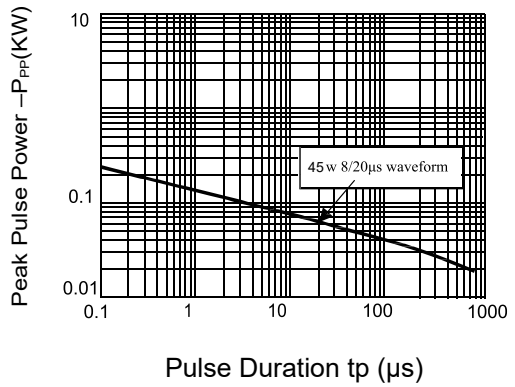

Figure 1: Peak Pulse Power Rating Curve

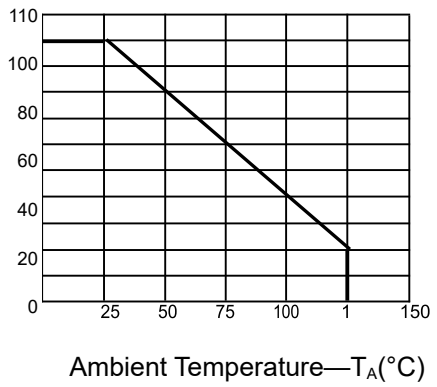

Figure 2: Pulse Derating Curve

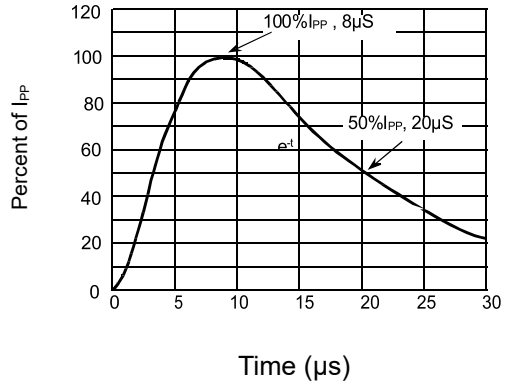

Figure 3: Pulse Wave form-8/20μs

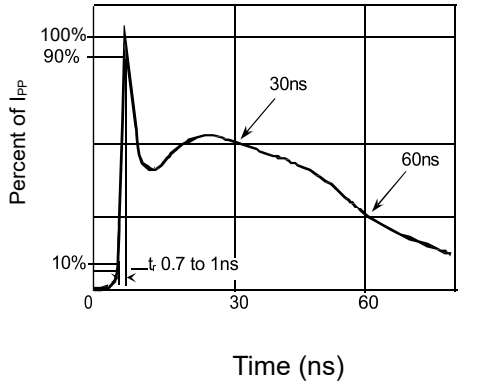

Figure 4: Pulse Wave form-ESD(IEC61000-4-2)

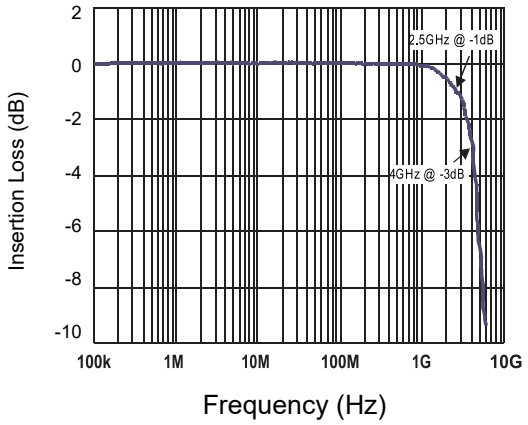

Figure 5: Insertion Loss S21 -I/O to GND

8.SOT-23-6 Package Outline Dimensions

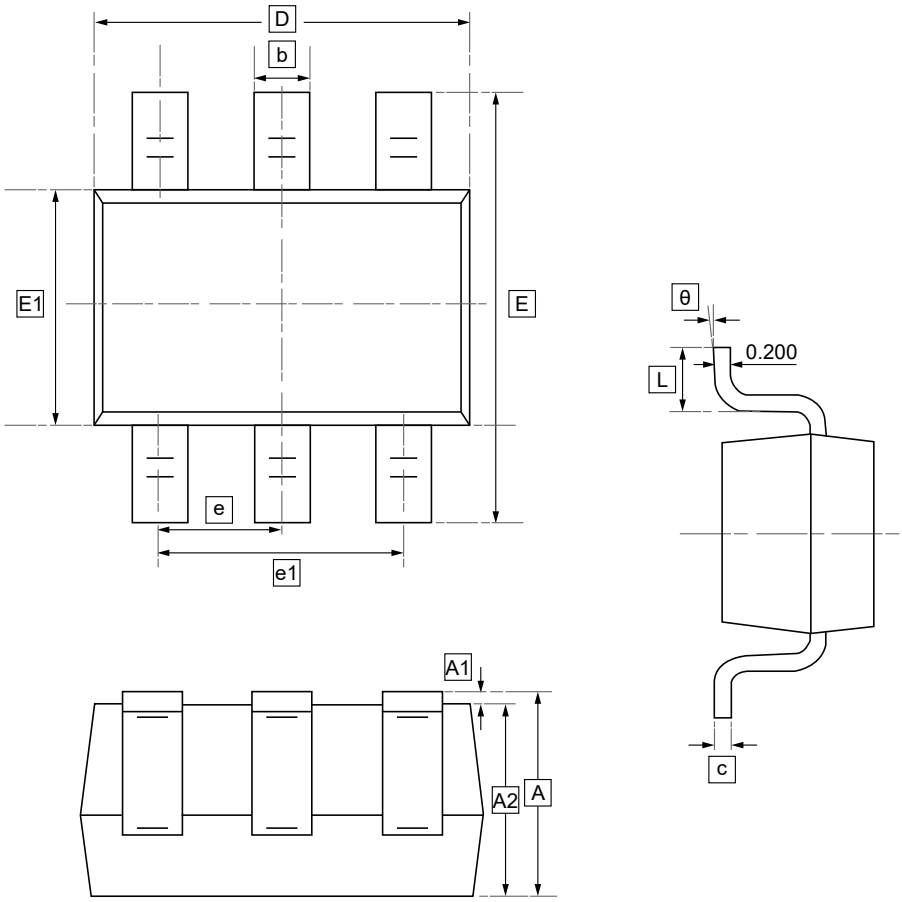

DIMENSIONS (mm are the original dimensions)

Symbol	A	A1	A2	b	c	D	E1	E	e	e1	L	θ
Min	1.050	0.000	1.050	0.300	0.100	2.820	1.500	2.650	0.950	1.800	0.300	0°
Max	1.250	0.100	1.150	0.500	0.200	3.020	1.700	2.950	BSC	2.000	0.600	8°

9.Ordering information

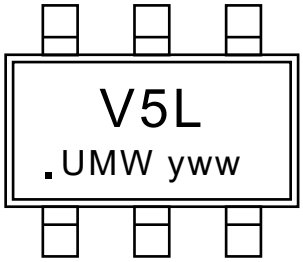

yww: Batch Code

Order Code	Package	Base QTY	Delivery Mode
UMW BST236A054U	SOT23-6	3000	Tape and reel

10.Disclaimer

UMW reserves the right to make changes to all products, specifications. Customers should obtain the latest version of product documentation and verify the completeness and currency of the information before placing an order.

When applying our products, please do not exceed the maximum rated values, as this may affect the reliability of the entire system. Under certain conditions, any semiconductor product may experience faults or failures. Buyers are responsible for adhering to safety standards and implementing safety measures during system design, prototyping, and manufacturing when using our products to prevent potential failure risks that could lead to personal injury or property damage.

Unless explicitly stated in writing, UMW products are not intended for use in medical, life-saving, or life-sustaining applications, nor for any other applications where product failure could result in personal injury or death. If customers use or sell the product for such applications without explicit authorization, they assume all associated risks.

When reselling, applying, or exporting, please comply with export control laws and regulations of China, the United States, the United Kingdom, the European Union, and other relevant countries, regions, and international organizations.

This document and any actions by UMW do not grant any intellectual property rights, whether express or implied, by estoppel or otherwise. The product names and marks mentioned herein may be trademarks of their respective owners.