1.Features

The ESD5311N is an ultra-low capacitance TVS(Transient Voltage Suppressor) designed to protect high speed data interfaces. It has been specifically designed to protect sensitive electronic components which are connected to data and transmission lines from overstress caused by ESD (Electrostatic Discharge).The ESD5311N incorporates one pair of ultralow capacitance steering diodes plus a TVS diode.

2.Applications

- USB 2.0 and USB 3.0
- HDMI 1.3 and HDMI 1.4
- SATA and eSATA
- DVI
- IEEE 1394
- PCI Express
- Portable Electronics
- Notebooks

3.Applications

- Stand-off voltage: 5V Max
- Transient protection for each line according to
  IEC61000-4-2 (ESD): ±20kV (contact discharge)
  IEC61000-4-5 (surge): 4 A (8/20μs)
- Ultra-low capacitance: CJ = 0.25pF typ.
- Ultra-low leakage current: I_R < 1nA typ.
- Low clamping voltage:
  V_{CL}=21V typ. @ I_{PP}=16A (TLP)
- Solid-state silicon technology

4.Pinning information

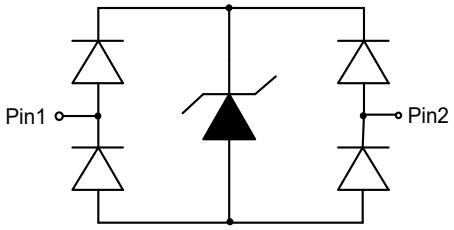

DFN1006-2

5.Absolute Maximum Ratings

Parameter	Symbol	Value	Units
Peak Pulse Power (t_p=8/20μs)	P_{PK}	84	W
Peak Pulse Current (t_p=8/20μs)	I_{PP}	4	A
ESD according to IEC61000-4-2 air discharge	V_{ESD}	±20	kV
ESD according to IEC61000-4-2 contact discharge		±20	kV
Operation junction temperature	T_J	125	°C
Lead temperature	T_L	260	°C
Storage temperature	T_{STG}	-55 to 150	°C

6.Electrical Characteristics(T_A=25°C unless otherwise noted)

Parameter	Symbol	Conditions	Min	Typ	Max	Units
Reverse maximum working voltage	V_{RWM}				5	V
Reverse leakage current	I_R	V_{RWM}=5V		<1	100	nA
Reverse breakdown voltage	V_{BR}	I_T=1mA	7.5	9	10	V
Clamping voltage [1)]	V_{CL}	I_{PP}=16A, t_p=100ns		21		V
Dynamic resistance [1)]	R_{DYN}			0.7		Ω
Clamping voltage [2)]	V_{CL}	V_{ESD}=8kV		21		V
Clamping voltage [3)]	V_{CL}	I_{PP}=1A, t_p=8/20μs			14	V
		I_{PP}=4A, t_p=8/20μs			21	V
Junction capacitance	C_J	V_R=0V,f=1MHz,Any I/O pin to GND		0.25	0.4	pF

Notes:

1) TLP parameter: Z_0=50Ω , t_p=100ns, t_r=2ns, averaging window from 60ns to 80ns. R_{DYN} is calculated from 4A to 16A.

2) Contact discharge mode, according to IEC61000-4-2.

3) Non-repetitive current pulse, according to IEC61000-4-5.

7.1Typical characteristic

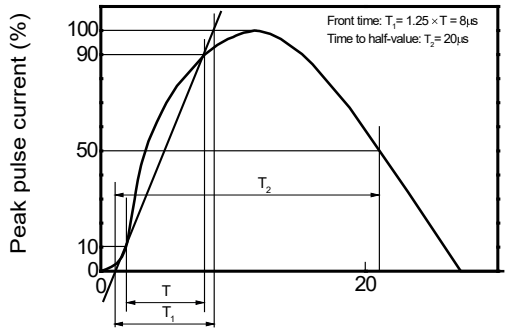

Figure 1: 8/20μs waveform per IEC61000-4-5

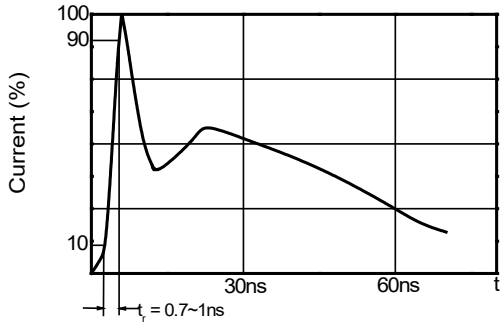

Figure 2: Contact discharge current waveform per IEC61000-4-2

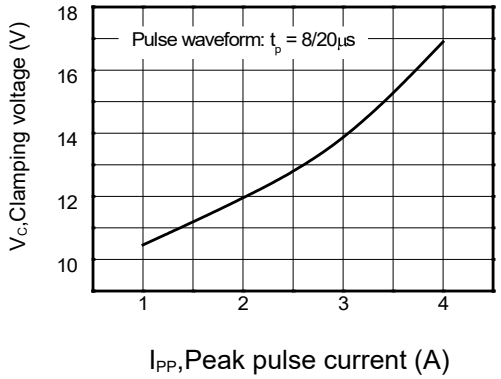

Figure 3: Clamping voltage vs. Peak pulse current

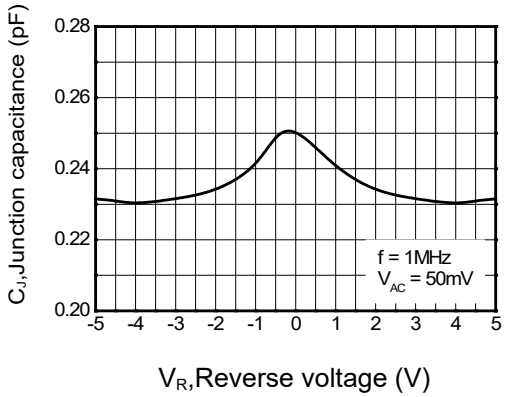

Figure 4: Capacitance vs. Reveres voltage

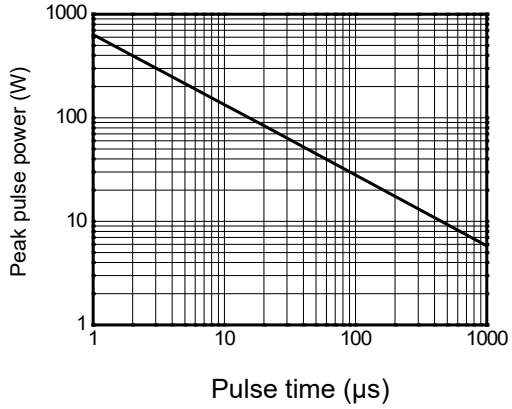

Figure 5: Non-repetitive peak pulse power vs. Pulse time

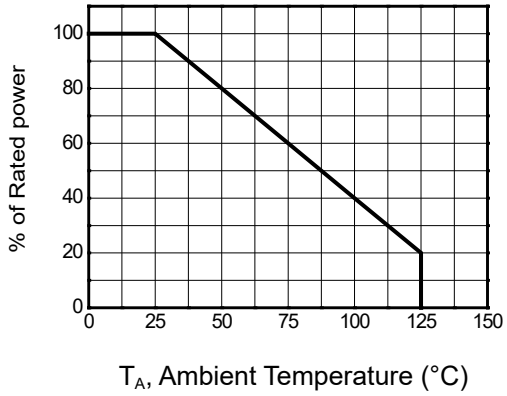

Figure 6: Power derating vs. Ambient temperature

7.2Typical characteristic

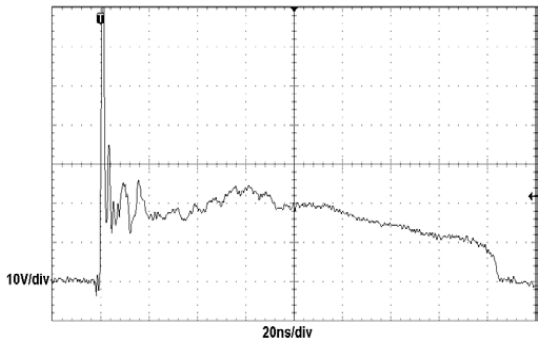

Figure 7: ESD clamping
(+8kV contact discharge per IEC61000-4-2)

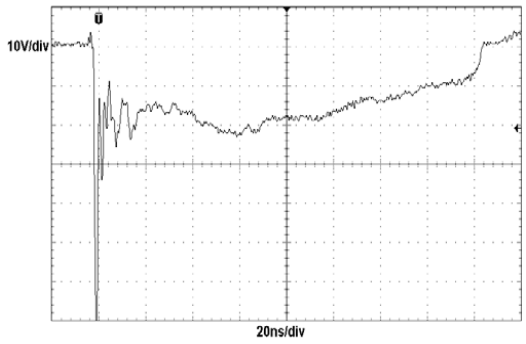

Figure 8: ESD clamping
(- 8kV contact discharge per IEC61000-4-2)

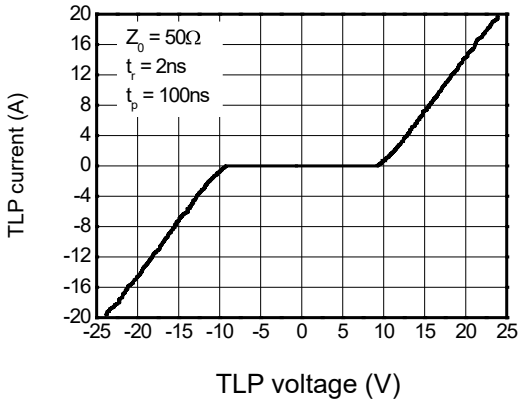

Figure 9: TLP Measurement

8.DFN1006-2L Package Outline Dimensions

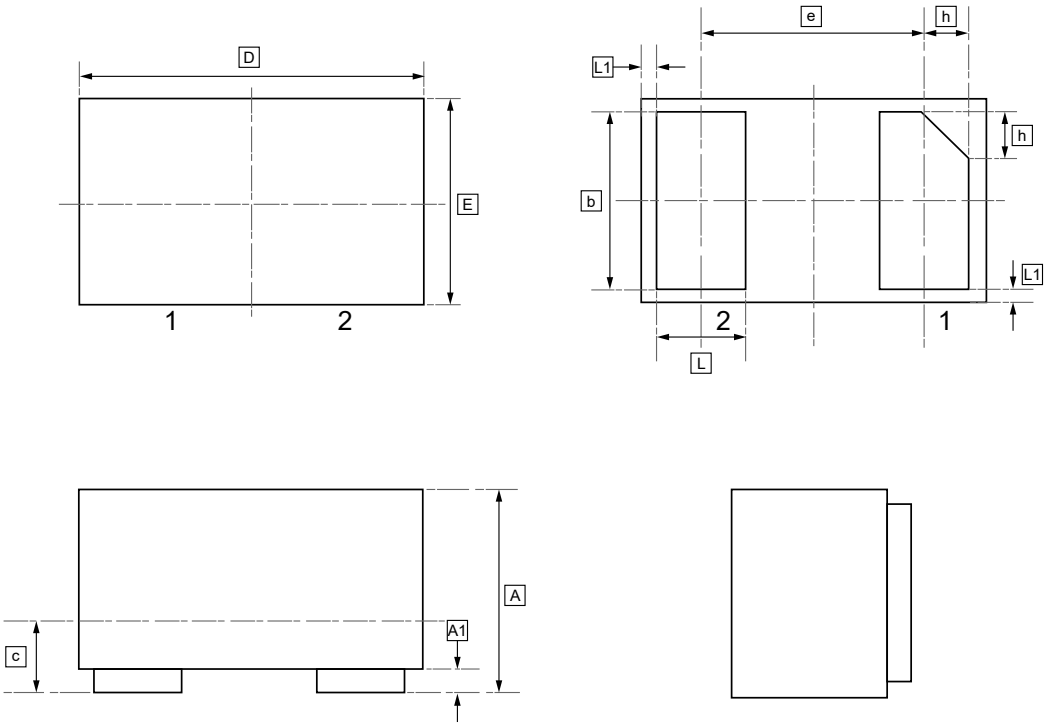

DIMENSIONS (mm are the original dimensions)

Symbol	A	A1	b	c	D	e	E	L	L1	h
Min	0.45	0.00	0.45	0.12	0.95	0.65	0.55	0.20	0.05	0.07
Max	0.55	0.05	0.55	0.18	1.05	BSC	0.65	0.30	REF	0.17

9.Ordering information

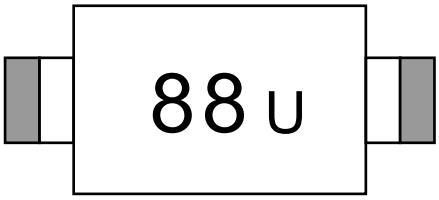

Order Code	Package	Base QTY	Delivery Mode
UMW ESD5311N	DFN1006-2	10000	Tape and reel

10.Disclaimer

UMW reserves the right to make changes to all products, specifications. Customers should obtain the latest version of product documentation and verify the completeness and currency of the information before placing an order.

When applying our products, please do not exceed the maximum rated values, as this may affect the reliability of the entire system. Under certain conditions, any semiconductor product may experience faults or failures. Buyers are responsible for adhering to safety standards and implementing safety measures during system design, prototyping, and manufacturing when using our products to prevent potential failure risks that could lead to personal injury or property damage.

Unless explicitly stated in writing, UMW products are not intended for use in medical, life-saving, or life-sustaining applications, nor for any other applications where product failure could result in personal injury or death. If customers use or sell the product for such applications without explicit authorization, they assume all associated risks.

When reselling, applying, or exporting, please comply with export control laws and regulations of China, the United States, the United Kingdom, the European Union, and other relevant countries, regions, and international organizations.

This document and any actions by UMW do not grant any intellectual property rights, whether express or implied, by estoppel or otherwise. The product names and marks mentioned herein may be trademarks of their respective owners.