1.Description

The SN74AUP1G126 is a single non-inverting buffer with 3−State output from ultra low power series, which can operate from a 0.8V to 3.6V supply. This device is fabricated with advanced CMOS technology to achieve ultra-high speed with high output drive.

2.Features

- Designed for 0.8V to 3.6V V_{CC} Operation
- Low static power consumption; I_{CC}=0.7μA (maximum)
- 4mA Balanced Output Sink and Source Capability
- Near Zero Static Supply Current Substantially Reduces System Power Requirements
- These Devices are Pb−Free and are RoHS Compliant

3.Pinning information

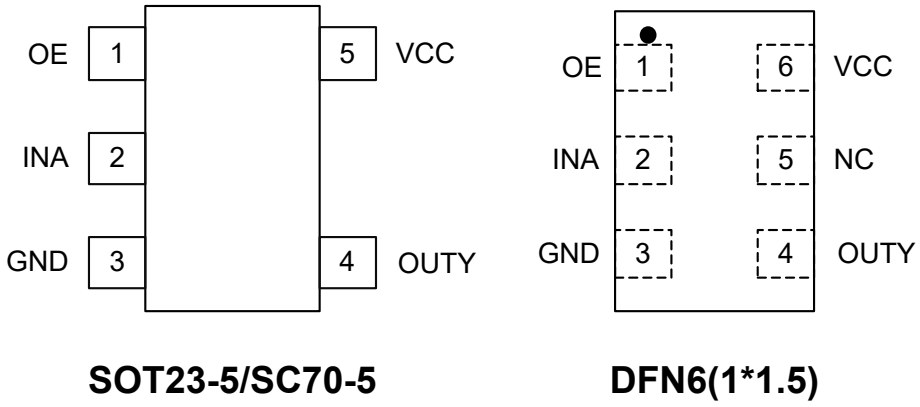

SOT23-5/SC70-5 **DFN6(1*1.5)**

Figure1. Top View

4.Pin Function

Pin No.		Function
SC70-5/SOT23-5	DFN6	
1	1	OE
2	2	INA
3	3	GND
4	4	OUTY
/	5	NC
5	6	VCC

5.Block Diagram

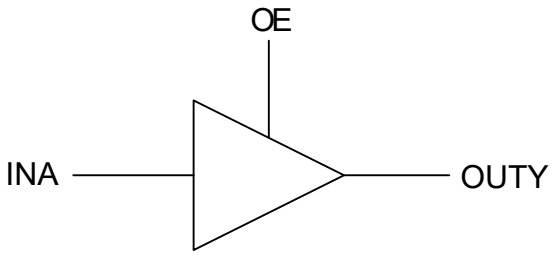

Figure2.

Function Table

Input		Output
OE	**INA**	**OUTY**
H	L	L
H	H	H
L	X	Z

6.Absolute Maximum Ratings

Parameter		Symbol	Value	Units
DC Supply Voltage		V_{CC}	−0.5 to 4.6	V
DC Input Voltage		V_I	$-0.5 \le V_I \le +4.6$	V
DC Output Voltage Output in Higher or Low State (1)		V_O	−0.5 to 4.6	V
DC Input Diode Current V_I<GND		I_{IK}	-50	mA
DC Output Diode Current V_O<GND, V_O>V_{CC}		I_{OK}	±50	mA
DC Output Sink Current		I_O	±20	mA
DC Supply Current per Supply Pin		I_{CC}	±50	mA
Storage Temperature Range		T_{STG}	-65 to 150	°C
Lead Temperature, 1 mm from Case for 10 Seconds		T_L	260	°C
Junction Temperature Under Bias		T_J	150	°C
Power Dissipation in Still Air at 85°C		P_D	200	mW
ESD Classification	Human Body Model (2)	V_{ESD}	4000	V
	Machine Model (3)		200	V
	Charged Device Model (4)		1000	V
Latchup Current Above V_{CC} and GND at 125°C (5)		I_{LU}	±100	mA

Stresses exceeding those listed in the Maximum Ratings table may damage the device. If any of these limits are exceeded, device functionality should not be assumed, damage may occur and reliability may be affected.

Notes:

1. IO absolute maximum rating must be observed.
2. Tested to EIA/JESD22−A114−A, rated to EIA/JESD22−A114−B.
3. Tested to EIA/JESD22−A115−A, rated to EIA/JESD22−A115−A.
4. Tested to JESD22−C101−A.
5. Tested to EIA/JESD78.

7.Recommended Operating Conditions

Parameter		Symbol	Min	Max	Unit
DC Supply Voltage Operating		V_{CC}	0.8	3.6	V
DC input Voltage		V_{IN}	0	3.6	V
DC Output Voltage (High or Low State)		V_{OUT}	0	3.6	V
Operating Temperature Range		T_A	-40	85	°C
Input Rise and Fall Time	V_{CC}=0.8V to 3.6V	t_r, t_f	0	20	ns/V

Notes:

Functional operation above the stresses listed in the Recommended Operating Ranges is not implied.

8.Electrical Characteristics

DC Electrical Characteristics

Parameter	Condition	Symbol	V_{CC}(V)	T_A=25°C			−40°C≤T_A≤85°C		Units
				Min	Typ	Max	Min	Max	
High−Level Input Voltage		V_{IH}	0.8	0.75V_{CC}			0.75V_{CC}		V
			0.9 to 1.95	0.7V_{CC}			0.7V_{CC}		
			2.3 to 2.7	1.6			1.6		
			3 to 3.6	2			2		
Low−Level Input Voltage		V_{IL}	0.8			0.25V_{CC}		0.25V_{CC}	V
			0.9 to 1.95			0.3V_{CC}		0.3V_{CC}	
			2.3 to 2.7			0.7		0.7	
			3.0 to 3.6			0.9		0.9	
High−Level Output Voltage	I_{OH}=−20μA	V_{OH}	0.8 to 3.6	V_{CC}-0.1			V_{CC}-0.1		V
	I_{OH}=−1.1mA		1.1	0.82	1.02		0.77		
	I_{OH}=−1.7μA		1.4	1.11	1.32		1.03		
	I_{OH}=−1.9mA		1.65	1.32	1.58		1.30		
	I_{OH}=−2.3mA		2.3	2.05	2.24		1.97		
	I_{OH}=−3.1mA			1.9	2.22		1.85		
	I_{OH}=−2.7mA		3	2.72	2.95		2.67		
	I_{OH}=−4.0mA			2.6	2.92		2.55		
Low−Level Output Voltage	I_{OL}=20μA	V_{OL}	0.8 to 3.6			0.1		0.1	V
	I_{OL}=1.1mA		1.1		0.11	0.33		0.33	
	I_{OL}=1.7mA		1.4		0.12	0.31		0.37	
	I_{OL}=1.9mA		1.65		0.11	0.31		0.35	
	I_{OL}=2.3mA		2.3		0.14	0.31		0.33	
	I_{OL}=3.1mA				0.19	0.44		0.45	
	I_{OL}=2.7mA		3		0.11	0.31		0.33	
	I_{OL}=4.0mA				0.16	0.44		0.45	

Input Leakage Current	V_{IN}=V_{CC} or GND	I_{IN}	0 to 3.6			0.1		0.2	μA
Power Off Leakage Current	V_{IN}=3.6V or V_{OUT}=3.6V	I_{OFF}	0			0.2		0.5	μA
Quiescent Supply Current	V_I=GND or(V_{CC} to 3.6V) OE=GND, I_O=0	I_{CC}	3.6			0.2		0.7	μA

Notes:

Product parametric performance is indicated in the Electrical Characteristics for the listed test conditions, unless otherwise noted.

Product performance may not be indicated by the Electrical Characteristics if operated under different conditions.

9.1 Switching Characteristics: C_L=5pF

Over recommended operating free-air temperature range, C_L=5pF (unless otherwise noted)

Parameter	From(Input)	To(Output)	Conditions		Min	Typ	Max	Units
t_{pd}	A	Y	V_{CC}=0.8V	T_A=25°C		18.1		ns
			V_{CC}=1.2±0.1V	T_A=25°C	4.3	7.4	12.6	
				T_A=-40 to 85°C	2.7		15.3	
			V_{CC}=1.5±0.1V	T_A=25°C	3.3	5.2	8.5	
				T_A=-40 to 85°C	1		10.2	
			V_{CC}=1.8±0.15V	T_A=25°C	2.6	4.1	6.8	
				T_A=-40 to 85°C	1.3		8.3	
			V_{CC}=2.5±0.2V	T_A=25°C	2	2.9	4.7	
				T_A=-40 to 85°C	1.1		5.8	
			V_{CC}=3.3±0.3V	T_A=25°C	1.7	2.4	3.8	
				T_A=-40 to 85°C	1		4.6	
t_{en}	OE	Y	V_{CC}=0.8V	T_A=25°C		19.1		ns
			V_{CC}=1.2±0.1V	T_A=25°C	5.1	9.3	15.9	
				T_A=-40 to 85°C	3.6		19.2	
			V_{CC}=1.5±0.1V	T_A=25°C	4.1	6.6	10.5	
				T_A=-40 to 85°C	2.5		12.7	
			V_{CC}=1.8±0.15V	T_A=25°C	3.2	5.3	8.7	
				T_A=-40 to 85°C	2.1		10.3	
			V_{CC}=2.5±0.2V	T_A=25°C	2.5	3.8	6	
				T_A=-40 to 85°C	1.6		7.2	
			V_{CC}=3.3±0.3V	T_A=25°C	2.1	3.2	4.9	
				T_A=-40 to 85°C	1.4		5.9	

Parameter	From(Input)	To(Output)	Conditions		Min	Typ	Max	Units
t_{dis}	OE	Y	V_{CC}=0.8V	T_A=25°C		12.1		ns
			V_{CC}=1.2±0.1V	T_A=25°C	2.4	4.1	6.9	
				T_A=-40 to 85°C	2.2		7.7	
			V_{CC}=1.5±0.1V	T_A=25°C	1.8	2.9	4.5	
				T_A=-40 to 85°C	1.7		5.1	
			V_{CC}=1.8±0.15V	T_A=25°C	1	2.9	4.3	
				T_A=-40 to 85°C	1.5		4.7	
			V_{CC}=2.5±0.2V	T_A=25°C	1	1.8	2.7	
				T_A=-40 to 85°C	1		3.3	
			V_{CC}=3.3±0.3V	T_A=25°C	1.2	2.2	3.2	
				T_A=-40 to 85°C	1.1		4	

9.2 Switching Characteristics: C_L=10pF

Over recommended operating free-air temperature range, C_L=10pF (unless otherwise noted)

Parameter	From(Input)	To(Output)	Conditions		Min	Typ	Max	Units
t_{pd}	A	Y	V_{CC}=0.8V	T_A=25°C		20.5	13.7	ns
			V_{CC}=1.2±0.1V	T_A=25°C	4.6	8.4	9.3	
				T_A=-40 to 85°C	3.6		16.6	
			V_{CC}=1.5±0.1V	T_A=25°C	3.5	5.9	7.5	
				T_A=-40 to 85°C	2.4		11.1	
			V_{CC}=1.8±0.15V	T_A=25°C	3.9	4.7	5.3	
				T_A=-40 to 85°C	1.3		9.1	
			V_{CC}=2.5±0.2V	T_A=25°C	2.3	3.4	4.3	
				T_A=-40 to 85°C	1.6		6.4	
			V_{CC}=3.3±0.3V	T_A=25°C	2.1	2.8		
				T_A=-40 to 85°C	1.4		5.2	
t_{en}	OE	Y	V_{CC}=0.8V	T_A=25°C		21.8	16.8	ns
			V_{CC}=1.2±0.1V	T_A=25°C	4.9	10.2	11.2	
				T_A=-40 to 85°C	4.4		20.2	
			V_{CC}=1.5±0.1V	T_A=25°C	3.9	7.3	9.2	
				T_A=-40 to 85°C	3.3		13.5	
			V_{CC}=1.8±0.15V	T_A=25°C	3.4	5.8	6.4	
				T_A=-40 to 85°C	2.7		11	
			V_{CC}=2.5±0.2V	T_A=25°C	2.5	4.3	5.4	
				T_A=-40 to 85°C	2.1		7.8	
			V_{CC}=3.3±0.3V	T_A=25°C	2.1	3.7		
				T_A=-40 to 85°C	1.9		6 4	

Parameter	From(Input)	To(Output)	Conditions		Min	Typ	Max	Units
t_{dis}	OE	Y	V_{CC}=0.8V	T_A=25°C		13		ns
			V_{CC}=1.2±0.1V	T_A=25°C	3.8	6.6	11.7	
				T_A=-40 to 85°C	1.2		14	
			V_{CC}=1.5±0.1V	T_A=25°C	2.2	4.7	7.9	
				T_A=-40 to 85°C	1.3		9.3	
			V_{CC}=1.8±0.15V	T_A=25°C	2.4	4.4	6.4	
				T_A=-40 to 85°C	2.2		7.5	
			V_{CC}=2.5±0.2V	T_A=25°C	1.3	3.1	4.9	
				T_A=-40 to 85°C	1.2		5.4	
			V_{CC}=3.3±0.3V	T_A=25°C	1.9	3.4	5	
				T_A=-40 to 85°C	1.9		5.6	

9.3 Switching Characteristics: C_L=15pF

Over recommended operating free-air temperature range, C_L=15pF (unless otherwise noted)

Parameter	From(Input)	To(Output)	Conditions		Min	Typ	Max	Units
t_{pd}	A	Y	V_{CC}=0.8V	T_A=25°C		22.5		ns
			V_{CC}=1.2±0.1V	T_A=25°C	5.8	9.3	15.1	
				T_A=-40 to 85°C	4.3		17.9	
			V_{CC}=1.5±0.1V	T_A=25°C	4.4	6.6	10.2	
				T_A=-40 to 85°C	3		12.1	
			V_{CC}=1.8±0.15V	T_A=25°C	3.5	5.3	8.3	
				T_A=-40 to 85°C	2.3		9.9	
			V_{CC}=2.5±0.2V	T_A=25°C	2.7	3.9	5.8	
				T_A=-40 to 85°C	1.9		7	
			V_{CC}=3.3±0.3V	T_A=25°C	2.4	3.2	4.7	
				T_A=-40 to 85°C	1.8		5.7	
t_{en}	OE	Y	V_{CC}=0.8V	T_A=25°C		25.2		ns
			V_{CC}=1.2±0.1V	T_A=25°C	7	11.3	18.1	
				T_A=-40 to 85°C	5.4		21.4	
			V_{CC}=1.5±0.1V	T_A=25°C	5.5	8.1	12.2	
				T_A=-40 to 85°C	4.1		14.5	
			V_{CC}=1.8±0.15V	T_A=25°C	4.3	6.5	10.1	
				T_A=-40 to 85°C	3.3		12	
			V_{CC}=2.5±0.2V	T_A=25°C	3.4	4.8	7.1	
				T_A=-40 to 85°C	2.6		8.4	
			V_{CC}=3.3±0.3V	T_A=25°C	2.9	4.1	5.9	
				T_A=-40 to 85°C	2.3		6.9	

Parameter	From(Input)	To(Output)	Conditions		Min	Typ	Max	Units
t_{dis}	OE	Y	V_{CC}=0.8V	T_A=25°C		14		ns
			V_{CC}=1.2±0.1V	T_A=25°C	3.7	5.8	8.2	
				T_A=-40 to 85°C	3.3		11	
			V_{CC}=1.5±0.1V	T_A=25°C	5.5	3.9	5.9	
				T_A=-40 to 85°C	2.1		8	
			V_{CC}=1.8±0.15V	T_A=25°C	3.3	4.5	6.6	
				T_A=-40 to 85°C	2.9		7.4	
			V_{CC}=2.5±0.2V	T_A=25°C	2.3	3.2	4.3	
				T_A=-40 to 85°C	1.8		5.1	
			V_{CC}=3.3±0.3V	T_A=25°C	2.4	4.8	6.2	
				T_A=-40 to 85°C	3.1		6.7	

9.4 Switching Characteristics: C_L=30pF

Over recommended operating free-air temperature range, C_L=30pF (unless otherwise noted)

Parameter	From(Input)	To(Output)	Conditions		Min	Typ	Max	Units
t_{pd}	A	Y	V_{CC}=0.8V	T_A=25°C		29		ns
			V_{CC}=1.2±0.1V	T_A=25°C	7.4	12	18.7	
				T_A=-40 to 85°C	6.6		21.4	
			V_{CC}=1.5±0.1V	T_A=25°C	5.7	8.6	12.5	
				T_A=-40 to 85°C	4.9		14.7	
			V_{CC}=1.8±0.15V	T_A=25°C	4.8	6.9	10.1	
				T_A=-40 to 85°C	3.1		12	
			V_{CC}=2.5±0.2V	T_A=25°C	3.9	5.1	7.2	
				T_A=-40 to 85°C	3.3		8.7	
			V_{CC}=3.3±0.3V	T_A=25°C	3.5	4.8	6	
				T_A=-40 to 85°C	3		7	
t_{en}	OE	Y	V_{CC}=0.8V	T_A=25°C		33.4		ns
			V_{CC}=1.2±0.1V	T_A=25°C	8.8	14.1	21.8	
				T_A=-40 to 85°C	7.4		25.5	
			V_{CC}=1.5±0.1V	T_A=25°C	6.9	10.1	14.6	
				T_A=-40 to 85°C	5.6		17.4	
			V_{CC}=1.8±0.15V	T_A=25°C	5.6	8.1	12	
				T_A=-40 to 85°C	4.7		14.1	
			V_{CC}=2.5±0.2V	T_A=25°C	4.3	6.1	8.5	
				T_A=-40 to 85°C	3.8		10	
			V_{CC}=3.3±0.3V	T_A=25°C	3.7	5.2	7.1	
				T_A=-40 to 85°C	3.4		8.3	

Parameter	From(Input)	To(Output)	Conditions		Min	Typ	Max	Units
t_{dis}	OE	Y	V_{CC}=0.8V	T_A=25°C		17.7		ns
			V_{CC}=1.2±0.1V	T_A=25°C	5.8	10	16	
				T_A=-40 to 85°C	3.7		16	
			V_{CC}=1.5±0.1V	T_A=25°C	5.7	7.7	10.9	
				T_A=-40 to 85°C	1		10.7	
			V_{CC}=1.8±0.15V	T_A=25°C	4.5	7.7	9.8	
				T_A=-40 to 85°C	4.4		12.5	
			V_{CC}=2.5±0.2V	T_A=25°C	3.9	5.6	7.4	
				T_A=-40 to 85°C	3.2		9	
			V_{CC}=3.3±0.3V	T_A=25°C	3.3	8.4	10.7	
				T_A=-40 to 85°C	6.6		10.8	

9.5 Operating Characteristics

T_A=25°C

Parameter			Conditions	V_{CC}	Typ	Units
C_{pd}	Power dissipation capacitance	Output enabled	f=10MHz	0.8V	3.8	pF
				1.2V±0.1V	3.7	
				1.5V±0.1V	3.7	
				1.8V±0.15V	3.7	
				2.5V±0.2V	3.9	
				3.3V±0.3V	4	
		Output disabled	f=10MHz	0.8V	0	
				1.2V±0.1V	0	
				1.5V±0.1V	0	
				1.8V±0.15V	0	
				2.5V±0.2V	0	
				3.3V±0.3V	0	

11.AC Test Circuit

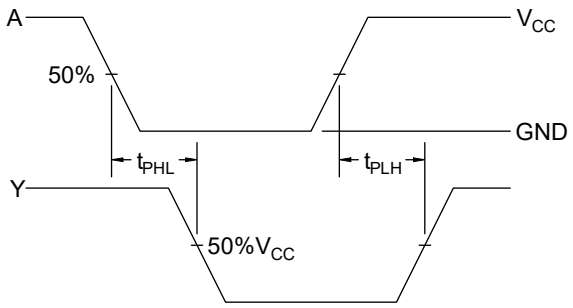

Figure 3. Switching Waveforms

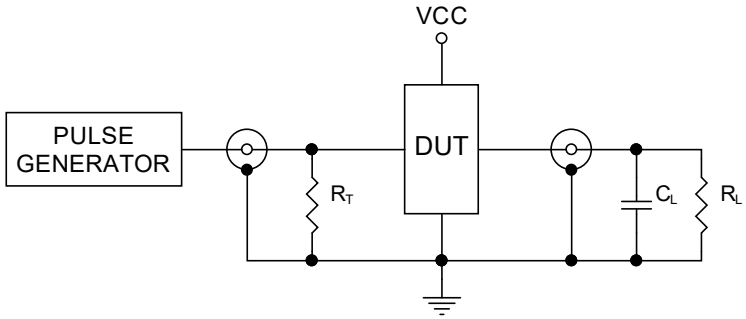

Figure 4. Test Circuit

12.1 SC70-5 Package Outline Dimensions

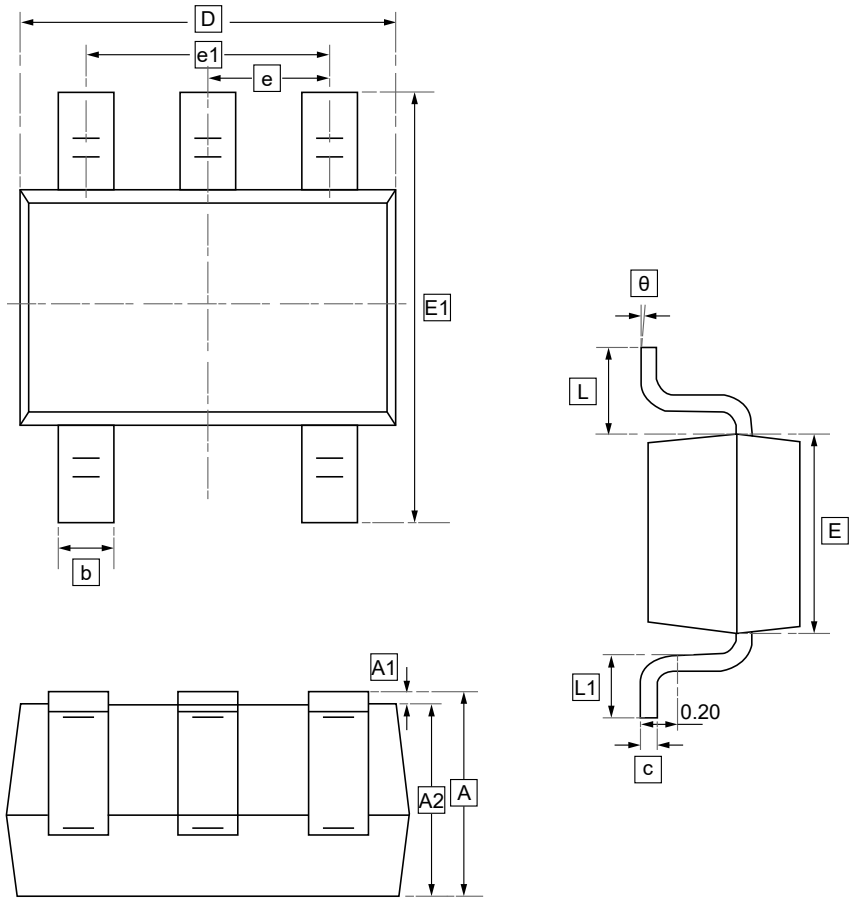

DIMENSIONS (mm are the original dimensions)

Symbol	A	A1	A2	b	c	D	E	E1	e	e1	L	θ
Min	0.90	0.00	0.90	0.15	0.08	1.80	1.15	2.15	0.65	1.20	0.26	7°
Max	1.10	0.10	1.00	0.35	0.15	2.25	1.35	2.45	TYP	1.40	0.46	REF.

12.2 SOT-23-5 Package Outline Dimensions

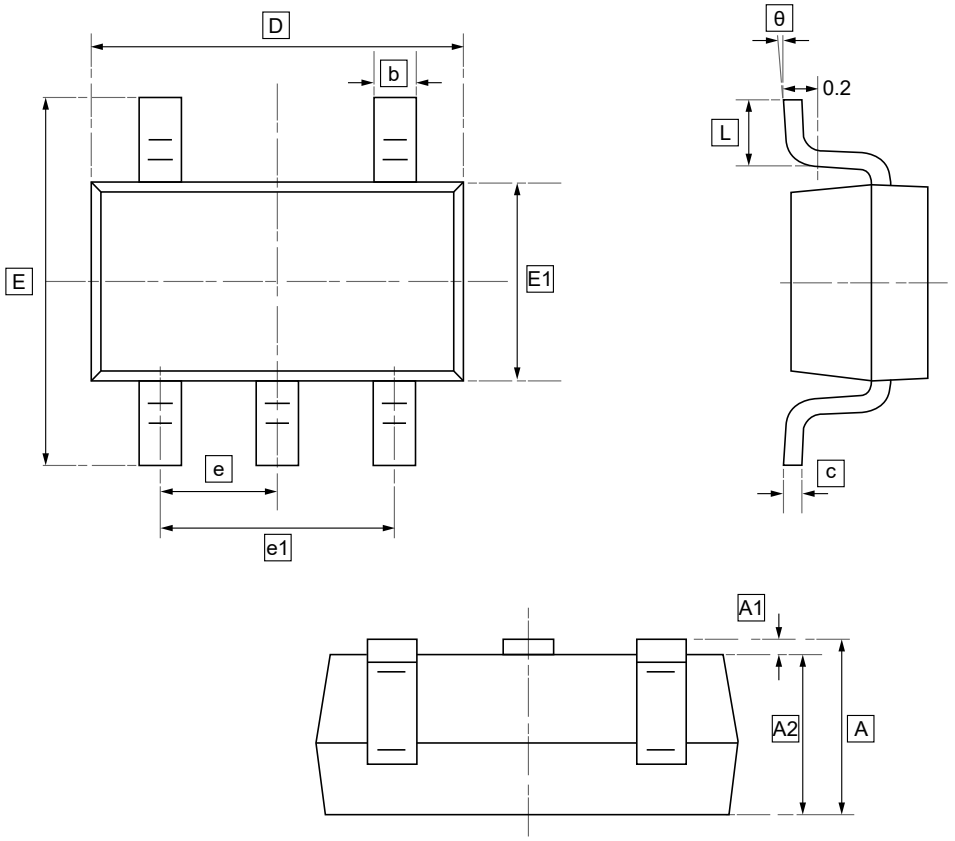

DIMENSIONS (mm are the original dimensions)

Symbol	A	A1	A2	b	c	D	E1	E	e	e1	L	θ
Min	1.050	0.000	1.050	0.300	0.100	2.820	1.500	2.650	0.950	1.800	0.300	0°
Max	1.250	0.100	1.150	0.500	0.200	3.020	1.700	2.950	BSC	2.000	0.600	8°

12.3 DFN6(1*1.5) Package Outline Dimensions

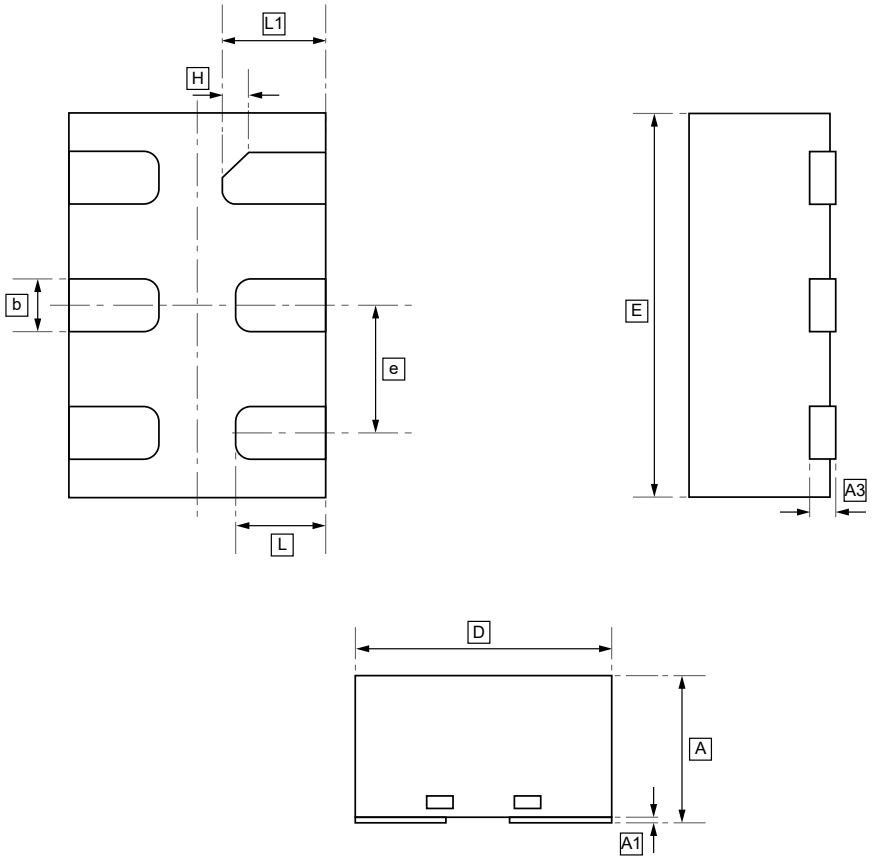

DIMENSIONS (mm are the original dimensions)

Symbol	A	A1	A3	b	D	E	e	H	L	L1
Min	0.50	0	0.10	0.15	0.90	1.40	0.40	0.10	0.30	0.35
Max	0.60	0.05	REF	0.25	1.10	1.60	0.60	REF	0.40	0.45

13.Ordering Information

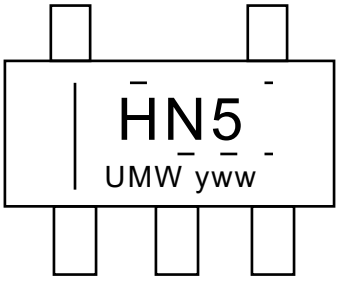

yww: Batch Code

Order Code	Marking	Package	Base QTY	Delivery Mode
UMW SN74AUP1G126DCKR	HN5	SC70-5	3000	Tape and reel
UMW SN74AUP1G126DBVR	H26R	SOT23-5	3000	Tape and reel
UMW SN74AUP1G126DSFR	HN	DFN6(1*1.5)	5000	Tape and reel

14.Disclaimer

UMW reserves the right to make changes to all products, specifications. Customers should obtain the latest version of product documentation and verify the completeness and currency of the information before placing an order.

When applying our products, please do not exceed the maximum rated values, as this may affect the reliability of the entire system. Under certain conditions, any semiconductor product may experience faults or failures. Buyers are responsible for adhering to safety standards and implementing safety measures during system design, prototyping, and manufacturing when using our products to prevent potential failure risks that could lead to personal injury or property damage.

Unless explicitly stated in writing, UMW products are not intended for use in medical, life-saving, or life-sustaining applications, nor for any other applications where product failure could result in personal injury or death. If customers use or sell the product for such applications without explicit authorization, they assume all associated risks.

When reselling, applying, or exporting, please comply with export control laws and regulations of China, the United States, the United Kingdom, the European Union, and other relevant countries, regions, and international organizations.

This document and any actions by UMW do not grant any intellectual property rights, whether express or implied, by estoppel or otherwise. The product names and marks mentioned herein may be trademarks of their respective owners.