UMW IP4220CZ6

Low Capactiance 4-Line TVS Array

1.Features

- Ultra low capacitance: 0.3pF typical (I/O to I/O)
- Ultra low leakage: nA level
- Low operating voltage: 5V
- Low clamping voltage
- Up to 4 data lines and one power line protects
- ROHS Compliant
- Complies with following standards:

  – IEC 61000-4-2 (ESD) immunity test

  Air discharge: ±25kV

  Contact discharge: ±20kV

  – IEC61000-4-4 (EFT) 40A (5/50ns)

  – IEC61000-4-5 (Lightning) : 4.7A(8/20μs)

2.Applications

- USB 2.0 and USB 3.0 Ports
- USB OTG
- Digital video interface(DVI)
- Monitor and Flat Panel Displays
- PCI Express and Serial SATA Ports
- Gigabit Ethernet
- IEEE 1394 firewire ports
- Consumer products (STB, DVD, DSC, DVC…)

3.Mechanical Characteristics

- Package: SOT23-6
- Lead Finish: Matte Tin
- Case Material: “Green” Molding Compound.
- UL Flammability Classification Rating 94V-0
- Moisture Sensitivity: Level 3 per J-STD-020

4.Pinning information

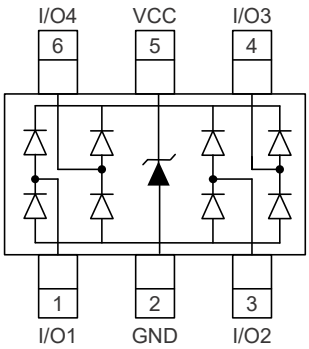

SOT23-6

5.Absolute Maximum Ratings T_A= 25°C

Parameter	Symbol	Maximum	Units
Peak Pulse Power (tp=8/20μs) (Vcc-GND)	P_{pp}	300	W
Peak Pulse Current (tp=8/20μs)	I_{pp}	4.7	A
ESD per IEC 61000−4−2 (Air)	V_{ESD}	±25	kV
ESD per IEC 61000−4−2 (Contact)		±20	kV
Junction Temperature Range	T_J	-55 to 125	°C
Storage Temperature Range	T_{STG}	-55 to 150	°C

6.Electrical Characteristic (T_A=25°C unless otherwise noted)

Parameter	Symbol	Conditions	Min	Typ	Max	Units
Reverse Working Voltage	V_{RWM}	Any I/O pin to ground			5	V
Breakdown Voltage	V_{BR}	IT = 1mA, any I/O pin to ground	6			V
Reverse leakage current	I_R	V_{RWM}=5V, any I/O pin to ground			0.08	μA
Clamping voltage (8 x 20μs pulse)	V_C	I_{PP}=3A, any I/O pin to ground			11	V
Clamping voltage (8 x 20μs pulse)	V_C	I_{PP}=4.7A, any I/O pin to ground			15	V
Junction capacitance	C_J	I_{PP}=17A (8 x 20μs pulse) VCC to ground			18	V
	C_J	V_R=0V, f=1MHz, between I/O pins		0.3	0.4	pF
	C_J	V_R=0V, f=1MHz, any I/O pin to ground			0.8	pF

7.Typical characteristic

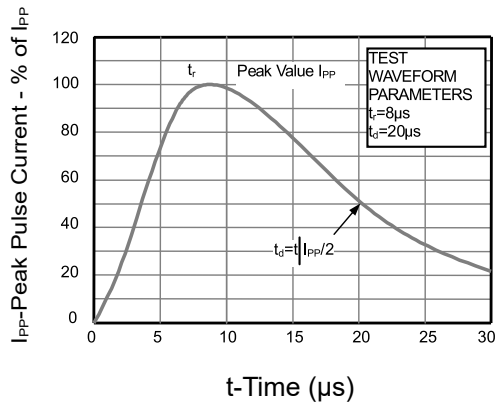

Figure 1: 8/20μs Pulse Waveform

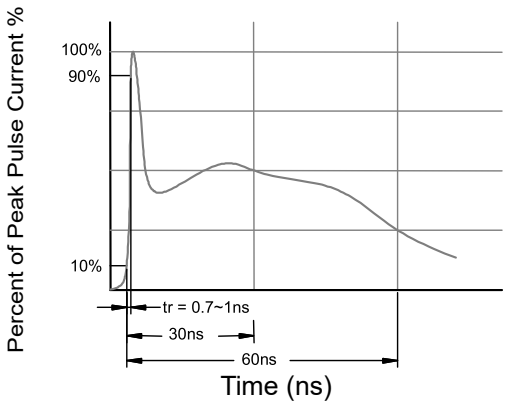

Figure 2: ESD Pulse Waveform (according to IEC 61000-4-2)

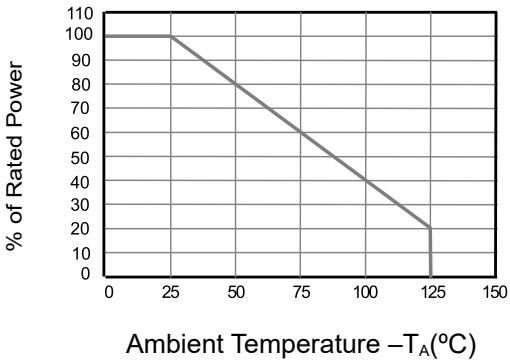

Figure 3: Power Derating Curve

8.SOT-23-6 Package Outline Dimensions

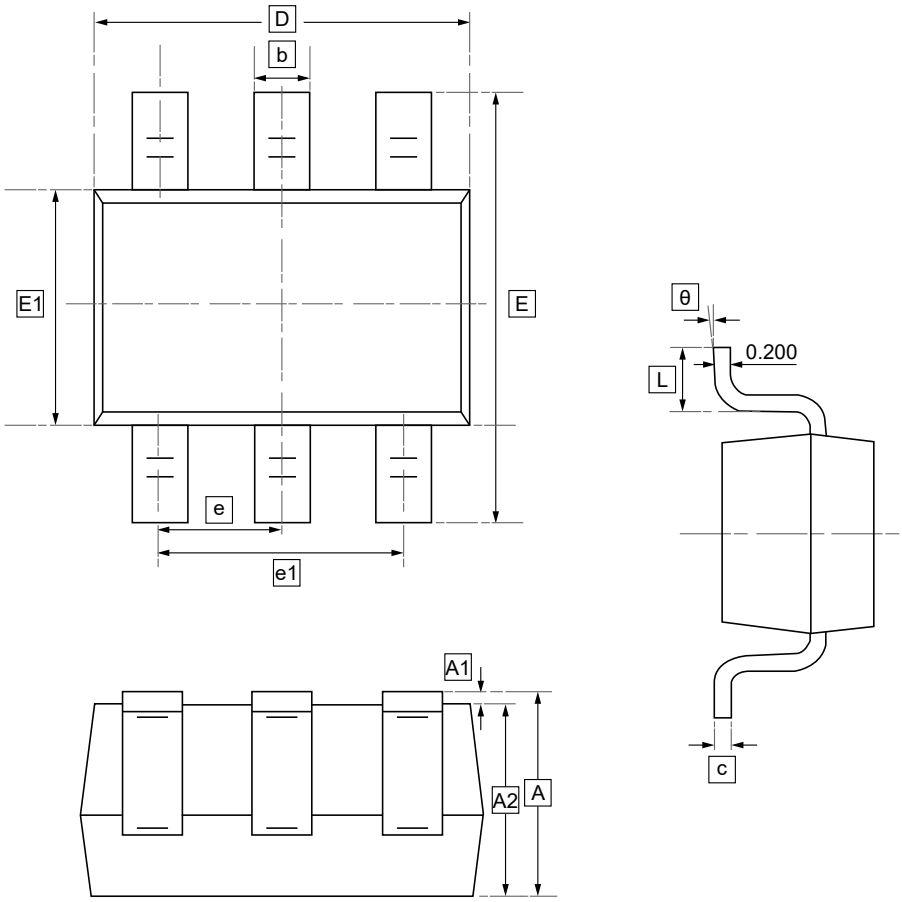

DIMENSIONS (mm are the original dimensions)

Symbol	A	A1	A2	b	c	D	E1	E	e	e1	L	θ
Min	1.050	0.000	1.050	0.300	0.100	2.820	1.500	2.650	0.950	1.800	0.300	0°
Max	1.250	0.100	1.150	0.500	0.200	3.020	1.700	2.950	BSC	2.000	0.600	8°

9.Ordering information

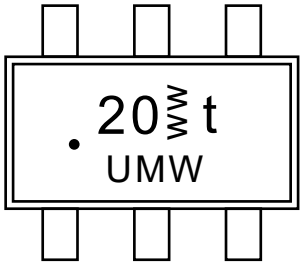

ww: Batch Code

Order Code	Package	Base QTY	Delivery Mode
UMW IP4220CZ6	SOT23-6	3000	Tape and reel

10.Disclaimer

UMW reserves the right to make changes to all products, specifications. Customers should obtain the latest version of product documentation and verify the completeness and currency of the information before placing an order.

When applying our products, please do not exceed the maximum rated values, as this may affect the reliability of the entire system. Under certain conditions, any semiconductor product may experience faults or failures. Buyers are responsible for adhering to safety standards and implementing safety measures during system design, prototyping, and manufacturing when using our products to prevent potential failure risks that could lead to personal injury or property damage.

Unless explicitly stated in writing, UMW products are not intended for use in medical, life-saving, or life-sustaining applications, nor for any other applications where product failure could result in personal injury or death. If customers use or sell the product for such applications without explicit authorization, they assume all associated risks.

When reselling, applying, or exporting, please comply with export control laws and regulations of China, the United States, the United Kingdom, the European Union, and other relevant countries, regions, and international organizations.

This document and any actions by UMW do not grant any intellectual property rights, whether express or implied, by estoppel or otherwise. The product names and marks mentioned herein may be trademarks of their respective owners.