1.Description

The UMW101X series combine an AlGaAs infrared emitting diode as the emitter which is optically coupled to a silicon planar phototransistor detector in a plastic LSOP4 package.

With the robust coplanar double mold structure, UMW101X series provide the most stable isolation feature.

2.Applications

- Switch mode power supplies
- Programmable controllers
- Household appliances
- Office equipment

3.Features

- High isolation 5000 VRMS
- CTR flexibility available see order information
- DC input with transistor output
- Operating temperature range - 55 °C to 110 °C
- RoHS & REACH Compliance
- Halogen free
- MSL class 1
- UL Recognized: UL1577, File No.E547318

4.Pinning information

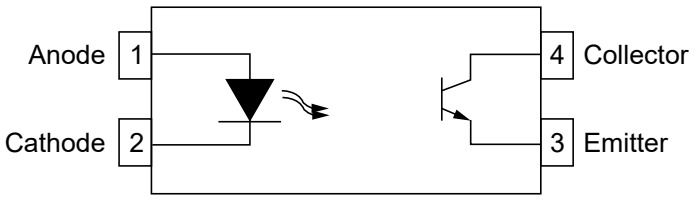

LSOP-4

5.Absolute Maximum Ratings

Parameter	Symbol	Value	Unit	Note
INPUT				
Forward Current	I_F	60	mA	
Peak Forward Current	I_{FP}	1	A	1
Reverse Voltage	V_R	6	V	
Power Dissipation	P_I	100	mW	
OUTPUT				
Collector - Emitter Voltage	V_{CEO}	80	V	
Emitter -Collector Voltage	V_{ECO}	7	V	
Collector Current	I_C	50	mA	
Output Power Dissipation	P_O	150	mW	
COMMON				
Total Power Dissipation	P_{TOT}	250	mW	
Isolation Voltage	V_{ISO}	5000	Vrms	2
Operating Temperature	T_{OPR}	-55 to 110	°C	
Storage Temperature	T_{STG}	-55 to 125	°C	
Soldering Temperature	T_{SOL}	260	°C	

Note 1. 100μs pulse, 100Hz frequency

Note 2. AC For 1 Minute, R.H. = 40 ~ 60%

6.Electrical Characteristics

Parameter		Symbol	Conditions	Min	Typ	Max	Units
INPUT							
Forward Voltage		V_F	I_F=10mA		1.24	1.4	V
Reverse Current		I_R	V_R=6V			10	μA
Input Capacitance		C_{IN}	V=0, f=1kHZ		30	250	pF
OUTPUT							
Collector Dark Current		I_{CEO}	V_{CE}=20V, I_F=0			100	nA
Collector-Emitter Breakdown Voltage		BV_{CEO}	I_C=0.1mA, I_F=0	80			V
Emitter-Collector Breakdown Voltage		BV_{ECO}	I_E=0.1mA, I_F=0	7			V
TRANSFER CHARACTERISTICS							
Current Transfer Ratio	UMW1017	CTR	I_F=5mA, V_{CE}=5V	80		160	%
	UMW1018			130		260	
	UMW1019			200		400	
Collector-Emitter Saturation Voltage		$V_{CE(sat)}$	I_F=10mA, I_C=1mA		0.1	0.3	V
Isolation Resistance		R_{ISO}	DC500V, 40 ~ 60% R.H.	10^12	10^14		Ω
Floating Capacitance		C_{IO}	V=0, f=1kHZ		0.4	1	pF
Cut-off Frequency (Note3)		F_C	V_{CE}=2V, I_C=2mA, R_L=100Ω,-3dB		80		kHz
Response Time (Rise) (Note4)		T_r	V_{CE}=2V, I_C=2mA		5	18	μs
Response Time (Fall) (Note4)		T_f	R_L=100Ω		6	18	μs

Note 3. Fig.12&13

Note 4. Fig.14

7.1Typical Characteristic

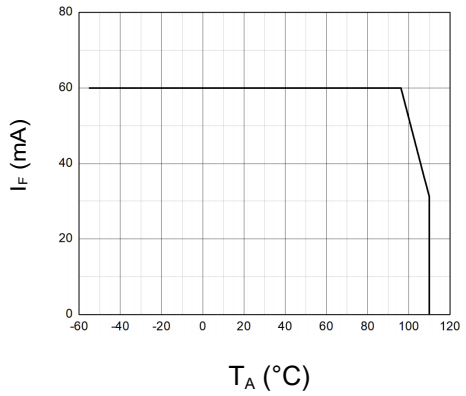

Figure 1: Forward Current vs. Forward Voltage

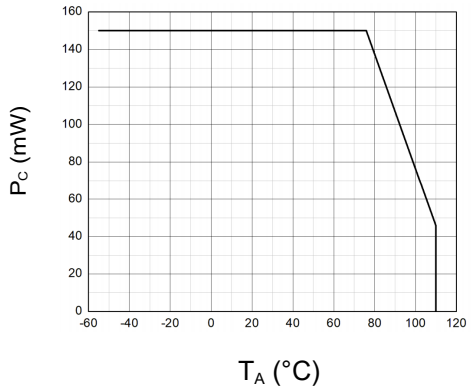

Figure 2: Collector Dark Current vs. Ambient Temperature

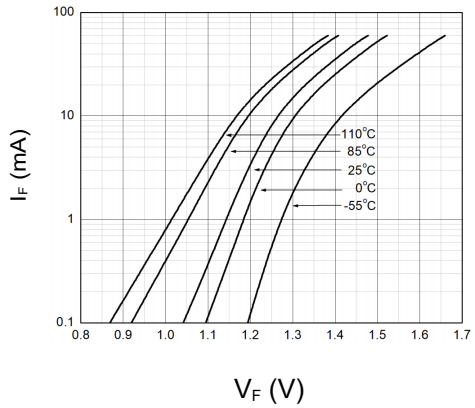

Figure 3: Collector Current vs. Collector-emitter Voltage

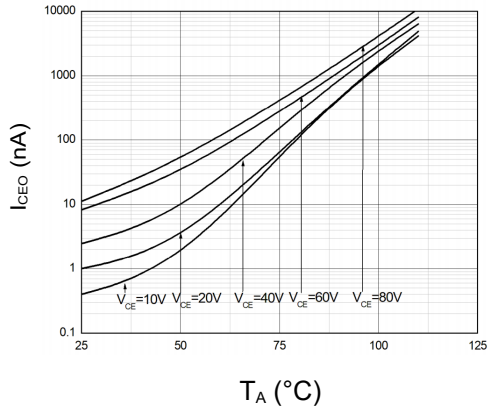

Figure 4: Collector Current vs. Collector-emitter Voltage

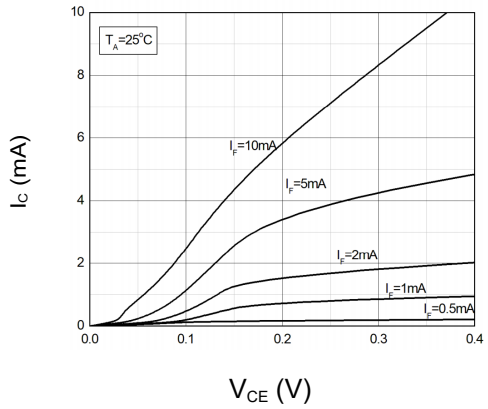

Figure 5: Collector Current vs. Collector-emitter Voltage

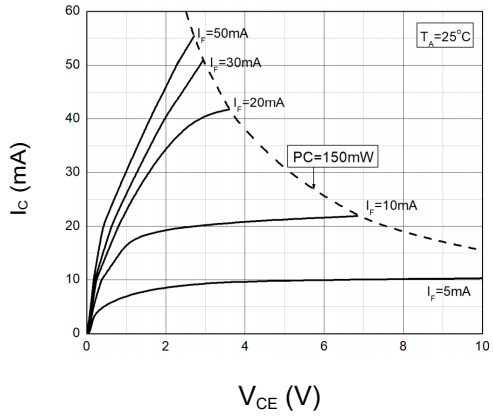

Figure 6: Collector Current vs. Collector-emitter Voltage

7.2Typical Characteristic

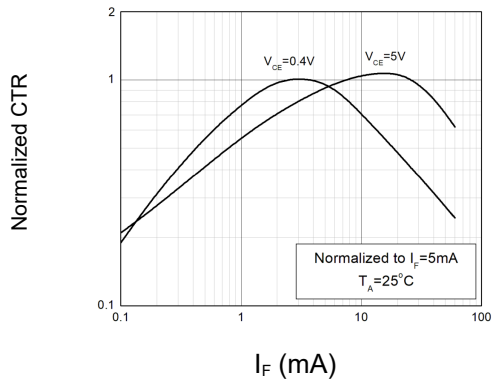

Figure 7: Normalized Current Transfer Ratio vs. Forward Current

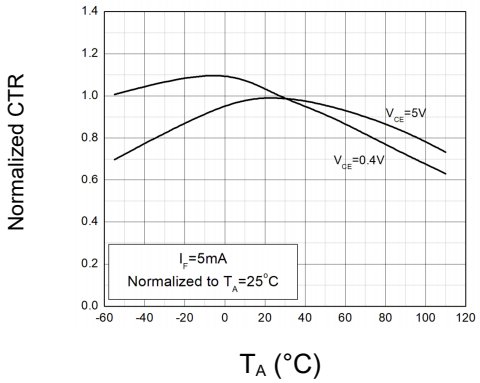

Figure 8: Normalized Current Transfer Ratio vs. Ambient Temperature

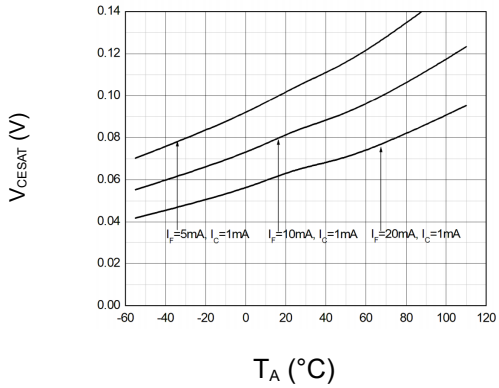

Figure 9: Collector-emitter Saturation Voltage vs. Ambient Temperature

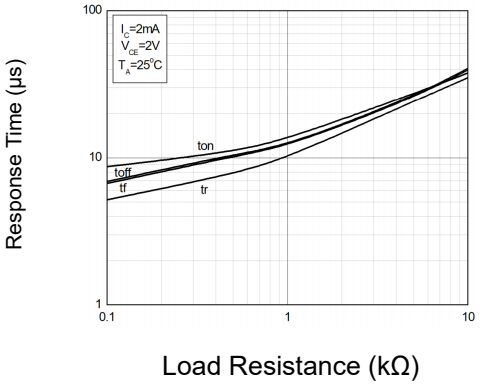

Figure 10: Switching Time vs. Load Resistance

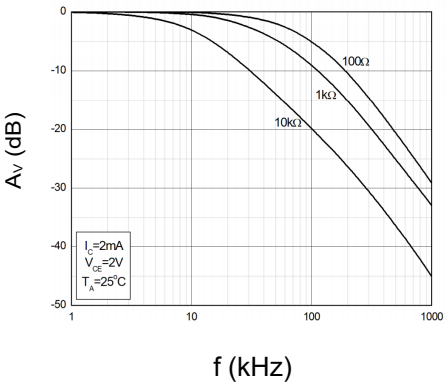

Figure 11: Frequency Response

8.Test Circuits

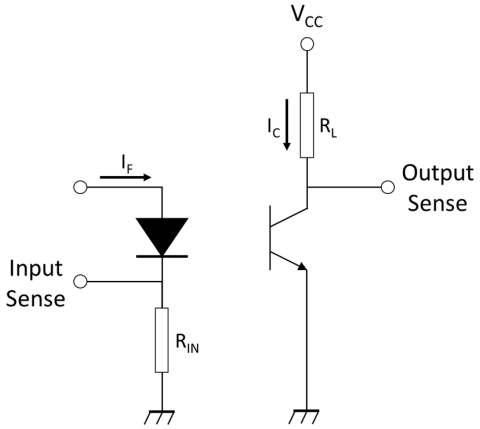

Figure 12: Test Circuits of Response Time

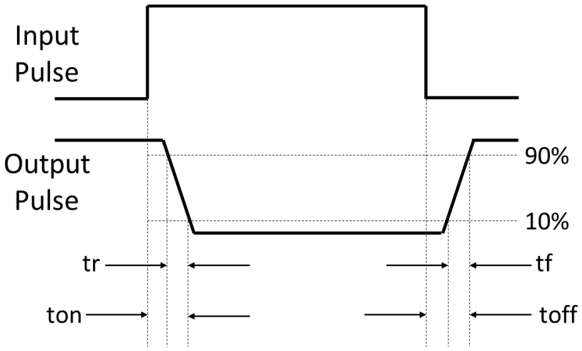

Figure 13: Curves of Response Time

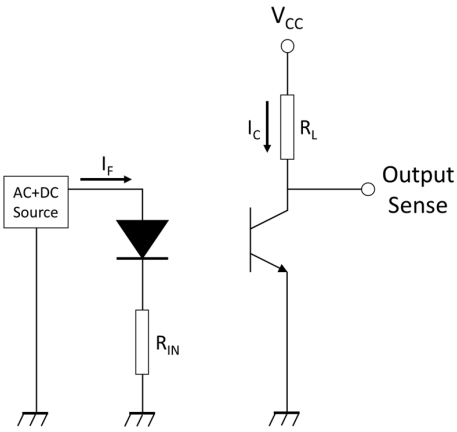

Figure 14: Test Circuits of Frequency Response

9.Temperature Profile of Solderin

IR REFLOW SOLDERING (J-SUMW-020D COMPLIANT)

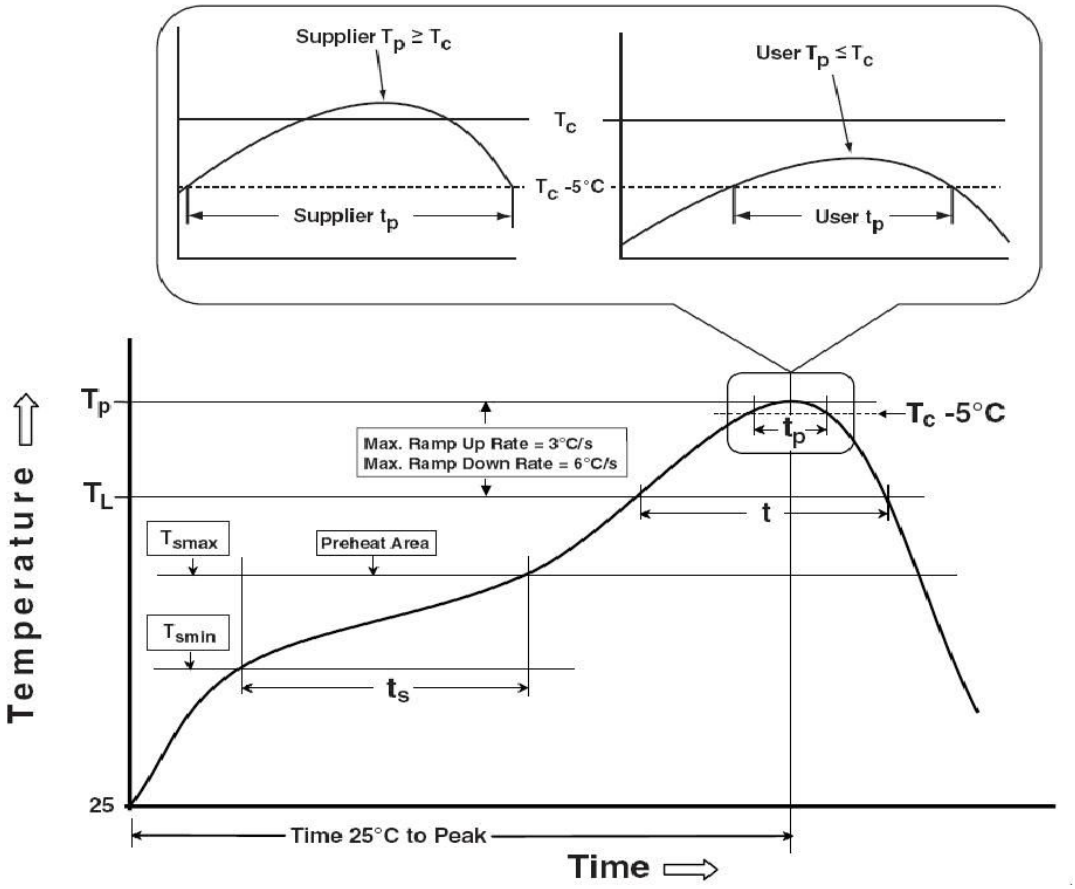

Profile Feature	Sn-Pb Assembly Profile	Pb-Free Assembly Profile
Temperature Min.(Tsmin)	100	150°C
Temperature Max.(Tsmax)	150	200°C
Time (ts) from (Tsmin to Tsmax)	60-120 seconds	60-120 seconds
Ramp-up Rate (tL to tP)	3°C/second max.	3°C/second max.
Liquidous Temperature (TL)	183°C	217°C
Time (tL) Maintained Above (TL)	60-150 seconds	60-150 seconds
Peak Body Package Temperature	235°C +0°C/-5°C	260°C +0°C/-5°C
Time (tP) within 5°C of 260°C	20 seconds	30 seconds
Ramp-down Rate (TP to TL)	6°C/second max	6°C/second max
Time 25°C to Peak Temperature	6minutes max.	8 minutes max.

IR REFLOW SOLDERING (J-SUMW-020D COMPLIANT)

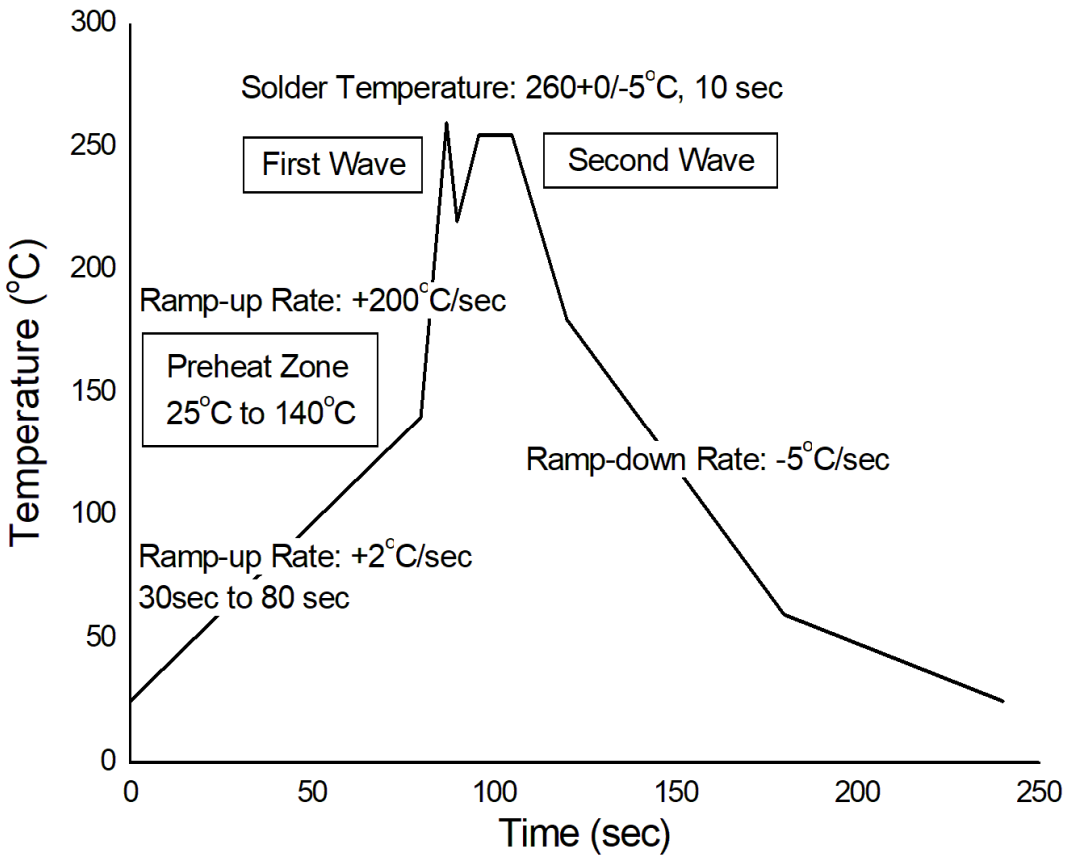

Hand Soldering By Soldering Iron	
Soldering Temperature	380+0/-5°C
Soldering Time	3 sec max.

Note 5. One time soldering is recommended for all soldering method.

Note 6. Do not solder more than three times for IR reflow soldering.

10.LSOP-4 Package Outline Dimensions

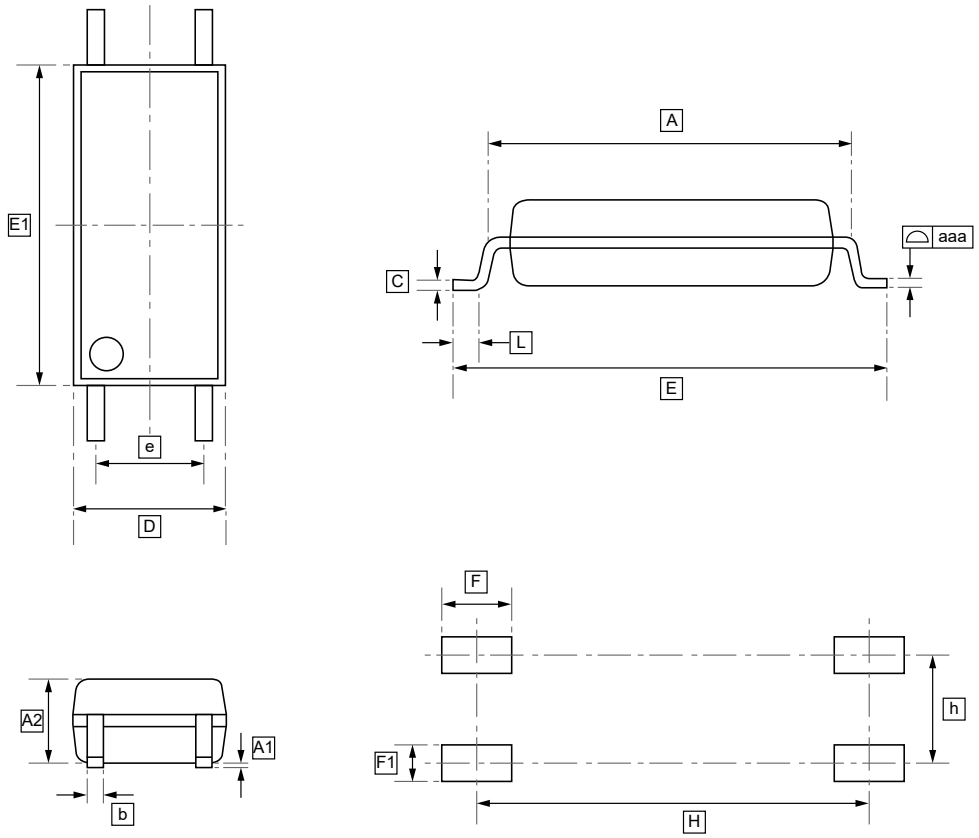

DIMENSIONS (mm are the original dimensions)

Symbol	E1	D	E	A	A2	e	A1	b	C	L	aaa	F
Min	7.32	3.30	9.90	8.35	1.75	2.54	0.00	0.30	0.10	0.40	0.00	1.60
Max	7.92	3.90	10.50	8.95	2.35		0.20	0.50	0.30	-	0.10	

Symbol	F1	H	h
Min	0.80	9.22	2.54
Max			

11.Ordering information

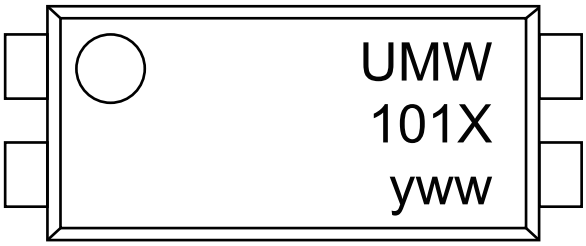

yww: Batch Code

Order Code	Package	Base QTY	Delivery Mode
UMW EL1018	LSOP-4	3000	Tape and reel
UMW EL1019	LSOP-4	3000	Tape and reel

12.Disclaimer

UMW reserves the right to make changes to all products, specifications. Customers should obtain the latest version of product documentation and verify the completeness and currency of the information before placing an order.

When applying our products, please do not exceed the maximum rated values, as this may affect the reliability of the entire system. Under certain conditions, any semiconductor product may experience faults or failures. Buyers are responsible for adhering to safety standards and implementing safety measures during system design, prototyping, and manufacturing when using our products to prevent potential failure risks that could lead to personal injury or property damage.

Unless explicitly stated in writing, UMW products are not intended for use in medical, life-saving, or life-sustaining applications, nor for any other applications where product failure could result in personal injury or death. If customers use or sell the product for such applications without explicit authorization, they assume all associated risks.

When reselling, applying, or exporting, please comply with export control laws and regulations of China, the United States, the United Kingdom, the European Union, and other relevant countries, regions, and international organizations.

This document and any actions by UMW do not grant any intellectual property rights, whether express or implied, by estoppel or otherwise. The product names and marks mentioned herein may be trademarks of their respective owners.